GM505S

Fail-safe inductive sensor

GIMC-4035-US

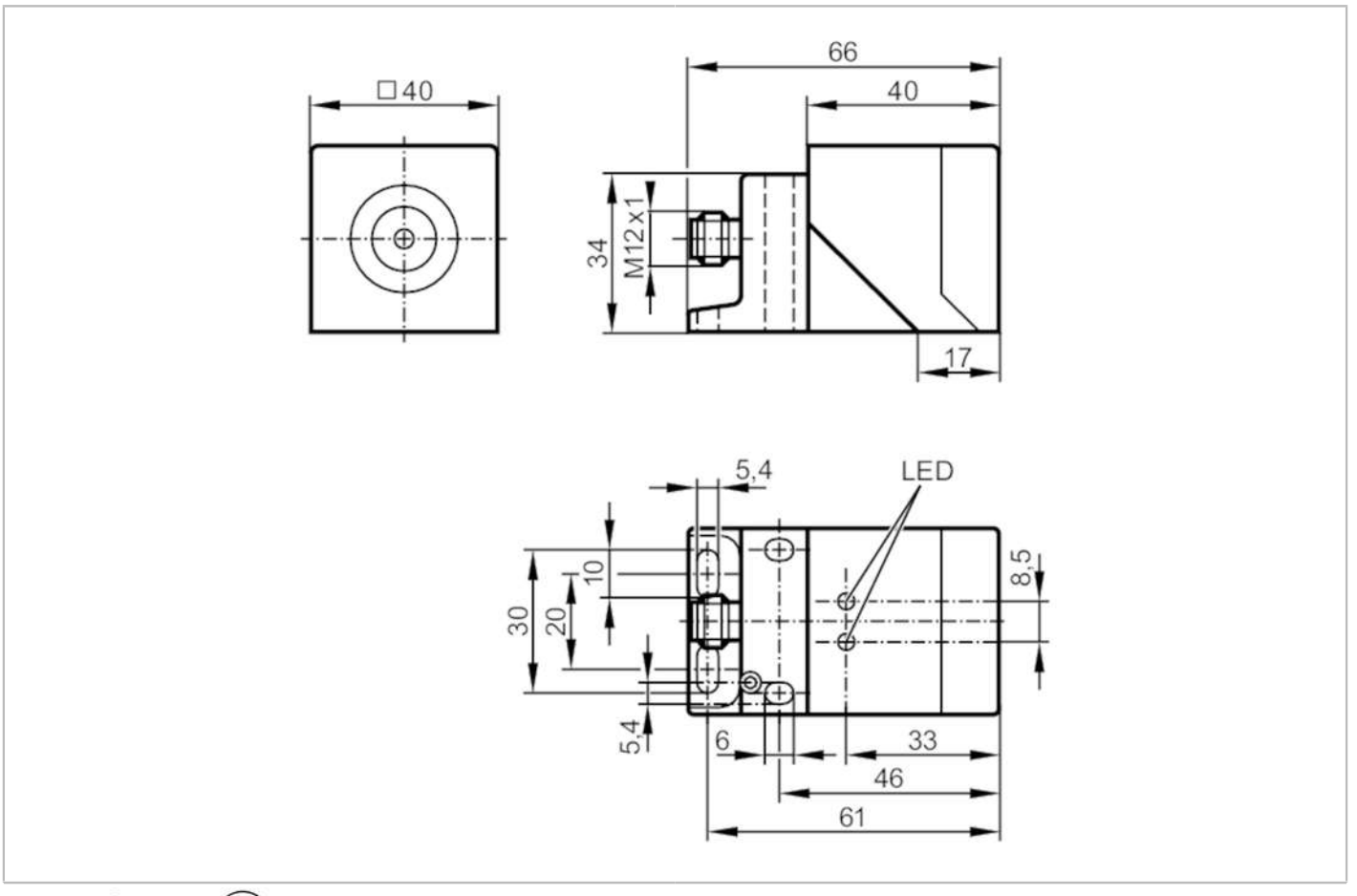

Product characteristics		
Output function		clock signal
Enable zone	[mm]	10...20
Housing		rectangular
Dimensions	[mm]	40 x 40 x 66
Application		
Special feature		Gold-plated contacts
Type of operation		continuous operation (maintenance-free)
Safety-related function		safe state when undamped
Application		industrial application
Electrical data		
Operating voltage	[V]	19.2...30 DC
Rated insulation voltage	[V]	30
Current consumption	[mA]	< 15
Protection class		III
Reverse polarity protection		yes
Max. power-on delay time	[ms]	5000

GM505S

Fail-safe inductive sensor

GIMC-4035-US

Inputs		
Max. input capacitance Ci_max	[nF]	2
Outputs		
Output function		clock signal
Output data		Interface type B
Short-circuit protection		yes
Max. capacitive load CL_max	[nF]	20
Detection zone		
Enable zone	[mm]	10...20
Safe switching-off distance s(ar)	[mm]	35
Response times		
Response time to safety request	[ms]	20
Response time when approaching the enable zone	[ms]	200; (typical 100)
Operating conditions		
Applications		class C to EN 60654-1 weatherproof application
Ambient temperature	[°C]	-25...70
Note on ambient temperature		operational life ≤ 87600 h
Ambient temperature	[°C]	10...40
Note on ambient temperature		operational life ≤ 175200 h
Rate of temperature change	[K/min]	0.5
Max. relative air humidity	[%]	briefly: 5...95 %; permanent: 5...70 %
Air pressure	[kPa]	80...106
Ionising radiation		not permissible
Salt spray		no
Protection		IP 65; IP 67; (to EN 60529)
Tests / approvals		
EMC		IEC 60947-5-2
		IEC 60947-5-3
		EN 61000-4-2 ESD: 6 kV CD / 8 kV AD
		EN 61000-4-3 HF radiated: 20 V/m
		EN 61000-4-4 Burst: 2 kV
		EN 61000-4-6 HF conducted: 10 V
		EN 61000-4-8: 30 A/m
		EN 55011: class B
Shock resistance		IEC 60947-5-2
Vibration resistance		IEC 60947-5-2
Safety classification		
Complies with the requirements		ISO 13849-1: 2015 category 3, PL e
		IEC 61508 SIL 3
Mission time TM	[h]	≤ 175200
Mission time TM (additional indication)		20 years
PFH	[1/h]	1E-08

GM505S

Fail-safe inductive sensor

GIMC-4035-US

Mechanical data		
Weight	[g]	358
Housing		rectangular
Mounting		non-flush mountable
Dimensions	[mm]	40 x 40 x 66
Materials		PPE; diecast zinc

Displays / operating elements		
Display	operation	1 x LED, green
	signal	1 x LED, yellow

Remarks	
Remarks	Unless stated otherwise, all data refer to the reference target plate to IEC 60947-5-2 over the whole temperature range.
	(FE360 = ST37K) 60x60x1 mm
Pack quantity	1 pcs.

Electrical connection - plug

Connector: 1 x M12; coding: A; Contacts: gold-plated



Connection

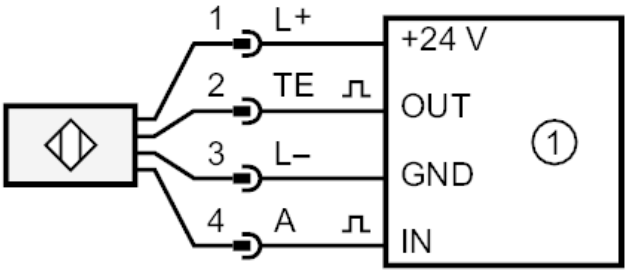

1 = safety-related logic unit