lumbergautomation
A BELDEN BRAND



Product: RSC 40/9

7/8" Power Field Attachable Connector: Male, straight, 4-pin, black housing, 230 V AC/DC, 9 A

Product Description

7/8" Power Field Attachable Connector: Male, straight, 4-pin, black housing, 230 V AC/DC, 9 A

Technical Drawing

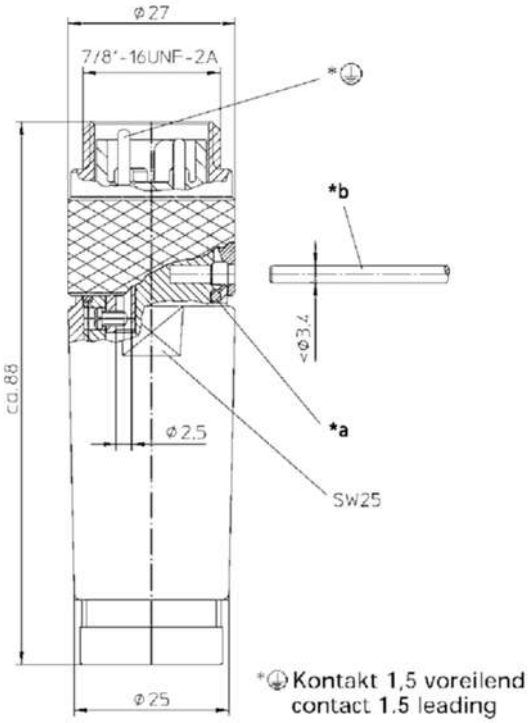

Typ/ type	Polzahl/ number of poles		Kabelverschraubung/ screw joint for cable
RSC 30/9	3	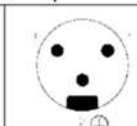	Ø 6 - 8mm
RSC 30/11			Ø 8 - 10mm
RSC 30/13,5			Ø 10 - 12mm
RSC 30/16			Ø 12 - 14mm
RSC 40/9	4	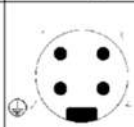	Ø 6 - 8mm
RSC 40/11			Ø 8 - 10mm
RSC 40/13,5			Ø 10 - 12mm
RSC 40/16			Ø 12 - 14mm
RSC 50/9	5	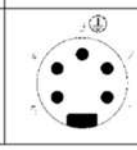	Ø 6 - 8mm
RSC 50/11			Ø 8 - 10mm
RSC 50/13,5			Ø 10 - 12mm
RSC 50/16			Ø 12 - 14mm

Technical Specifications

Technical Data

Product Family:	Power Connector
Product Sub Family:	7/8" Circular Connectors
Brand:	Lumberg Automation
Connector Type:	Field Attachable
Type of Contact / Gender:	male
Connector Design:	straight
Number of Pins:	4(3+PE)
Shielding:	Unshielded
Attachment Type:	Coupling screw with externel threads
Rated Voltage:	250 V AC/DC
Operating Voltage:	230 V AC/DC
Rated Current:	9 A
Contact Resistance:	≤ 10 mOhm
Insulation Resistance:	> 10^9 Ohm
Type of Connection:	screw terminal
Cable Gland:	PG 9
Conductor Cross Section:	max. 1.5 mm²
Ambient Temperature (Operation):	-40 °C to +90 °C
Protection Degree / IP Rating:	IP67
Pollution Degree:	3 acc. to DIN EN 60664-1 (VDE 0110-1)

Materials

Contact Base Material:	CuZn
Contact Plating:	Cu/Au
Contact Bearer Material:	TPU
Contact Bearer Color:	black
Housing Material:	PA 66
Housing Color:	black
Attachment Material:	Al (anodized) black
O-Ring Material:	NBR

Safety & Environmental Compliance

RoHS Compliant:	yes

Notes

Protection Degree / IP Rating Note:	* only if mounted and locked in combination with Hirschmann / Lumberg connector.
Note Derating:	* Notice derating
Note:	Do not connect / disconnect under load.

Variants

Item #	Item Description
11589	RSC 40/9

© 2019 Belden, Inc

All Rights Reserved.

Although Belden makes every reasonable effort to ensure their accuracy at the time of this publication, information and specifications described here in are subject to error or omission and to change without notice, and the listing of such information and specifications does not ensure product availability.

Belden provides the information and specifications herein on an "ASIS" basis, with no representations or warranties, whether express, statutory or implied. In no event will Belden be liable for any damages (including consequential, indirect, incidental, special, punitive, or exemplary damages) whatsoever, even if Belden has been advised of the possibility of such damages, whether in an action under contract, negligence or any other theory, arising out of or in connection with the use, or inability to use, the information or specifications described herein.

All sales of Belden products are subject to Belden's standard terms and conditions of sale.

Belden believes this product to be in compliance with all applicable environmental programs as listed in the data sheet. The information provided is correct to the best of Belden's knowledge, information and belief at the date of its publication. This information is designed only as a general guide for the safe handling, storage, and any other operation of the product itself or the one that it becomes a part of. The Product Disclosure is not to be considered a warranty or quality specification. Regulatory information is for guidance purposes only. Product users are responsible for determining the applicability of legislation and regulations based on their individual usage of the product.