

Version of 05/17/2022

UHLIS 3000

Process Input





Universal power supply



Hot-swappable plug in and out



Sensor power supply



ModBus RTU

Presentation

UHLIS allows the acquisition of 4 simultaneous channels in a 22.5mm case, reducing the footprint to less than 6mm.

Its 4 isolated Current or Voltage inputs each benefit from an independent sensor power supply that can be activated by switch.

Its through Modbus TCP connection via an RJ45 allows for easy upload to local installations and/or the cloud.

It also serves as an entry point on the RS485 backplane bus to query any device on that bus.

UHLIS 3000 is guaranteed **5 years**

Range

Transmitter without graphic display	**4 Inputs**		**Communication**		**Case width (mm)**
	Current	Voltage	RS485 USB	Modbus/TCP	22,5
UHLIS 3020T0		✓	✓		✓
UHLIS 3020TCP		✓	✓	✓	✓
UHLIS 3030T0	✓		✓		✓
UHLIS 3030TCP	✓		✓	✓	✓

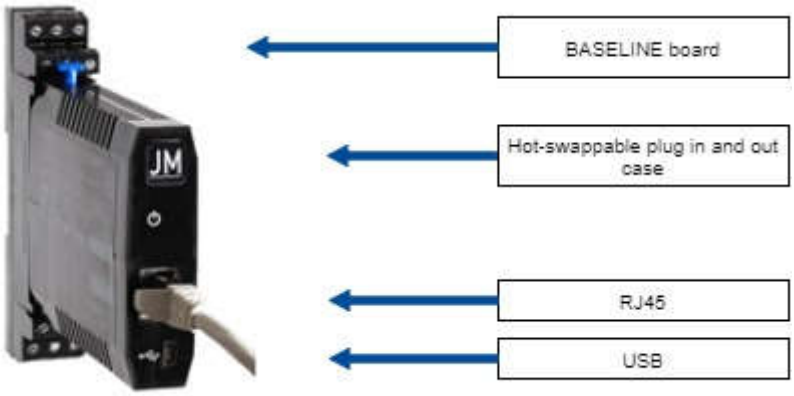

Factory settings

Program	Function	Filter	Resolution	Comma position	Cut-off	Offset
	Linear	0	1	4	off	0

Input	Input range	Input type	Input calibre
	0-10000	Current	4-20mA
		Voltage	0-100mV

Communication	RS485		MODBUS/TCP		
	Slave number	Speed	IP Address	Port	Netmask
	1	38400 bauds	192.168.1.253	502	255.255.255.0

Inputs - Communication

Input gauges

Current input (continuous)	UHLIS 3030: Standard scales: 0-20mA ; 4-20mA Adjustable scales: From 0mA to 22mA
Voltage input (continuous)	UHLIS 3020: Standard scales: 0-100mV, ±100mV Adjustable scales: From -110mV to +110mV
Sensor supply	2 wires sensor 24V - 26,6mA max

Communication

Communication	Isolated USB front panel, Isolated RS485 Modbus RTU RJ45, Modbus TCP/IP (for UHLIS XXXX -TCP)

Characteristics

Input characteristics	
Current input impedance	<6Ω
Voltage impedance Input	>10MΩ
Isolation	
Supply / Inputs-Communication	4200Vrms, 50Hz,1mn
Input x / Input y / USB / RS485 / Modbus TCP	2500Vrms, 50Hz,1mn
Auxiliary source	
Voltage supply	22,5-240Vdc or 100-230Vac 50/60Hz
General characteristics	
Precision class	0,1
Input analog / digital conversion	16 bits
Response time	<60ms
Thermal drift	<100ppm
Maximum of consumption	13,66VA
Operating temperature	-10°C … +60°C
Storage temperature	-25°C … +80°C
Relative humidity	<95% HR (non-condensing)
Protection factor	IP20 Black self-extinguishing polyamide housing V0

Options listing

Option	Device code
Tropicalization in a 22,5mm case	UHLISXXXX-T

Functions

Display functions	
LED indicators	1 green LED on devices without display
Programming	Programming via USB with **IXLOG** software
Memory Mini / Maxi	Storage of the maximum and minimum value of the measurement on each input channel
Customizing the display	Resolution, Comma
Input	
Inputs display	The display allows to visualize the input in physical value and in programmed value
Adjustable input scale	Allows to zoom on the input either in manual or automatic mode
Offset	Manual adjustment of the input offset
Taring	Taring function at process input (by validation)
Cut-off	Threshold below which the input is considered as null
Smart functions	
Sensor signal loss	Translates the sensor signal loss on: • the display, • each of the analog outputs, • the digital output, • the status of the relays
Filtering	Integration of the measurement over the defined time (in seconds)
Square root	The output(s) are function of the square root of the input
Segmentation in 99 points	Linearization in 99 points (free choice for each point), allows to create an output function by segmentation of the signal of each input channel
Outputs	
Visualization of the outputs	The display allows to visualize the outputs, in physical value and percentage; as well as the status of the relays

Links and communication	
RS485 MODBUS RTU	RS485 MODBUS RTU bidirectional digital link allowing to: • recover the measurements and transmit them in digital format • configure and control the device
MODBUS TCP	Bidirectional link via the RJ45 port allowing to: • recover measurements and transmit them in digital format • configure and control the device • make a Modbus-TCP-Modbus RTU gateway to communicate with other JM devices on the same RS485 bus as the UHLIS
USB front	USB front panel to connect directly to the USB port of a PC for programming via the **IXLOG** software
Mapping of Modbus addresses	Mapping of Modbus addresses, allowing you to choose your own variable address

Dimensions and wiring

Dimensions

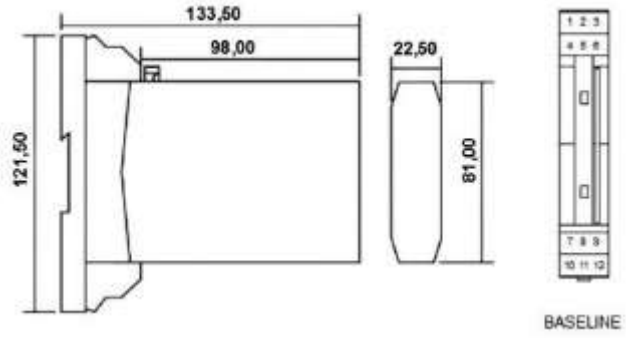

Dimensions: width: 22,5 mm - Height: 81 mm - Depth: 98 mm

BASELINE boards are to be ordered separately
22,5 mm Case : Reference BL01ALV
For multi-transmitter boards, please consult us.

Wiring

UHLIS 3020T0

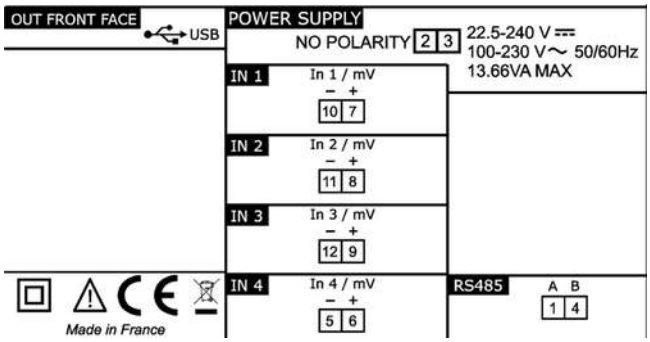

UHLIS 3020TCP

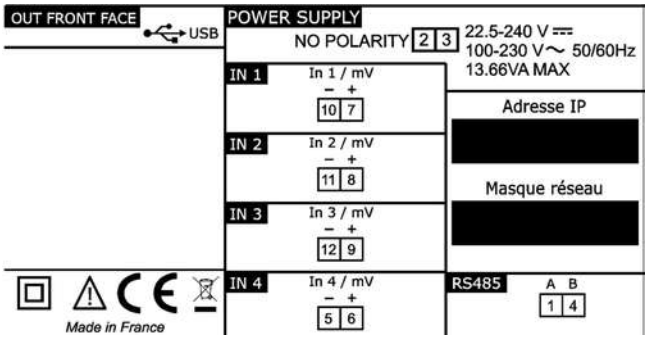

UHLIS 3030T0

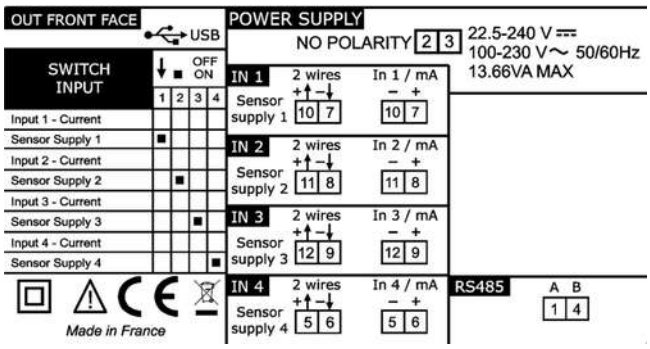

UHLIS 3030TCP

