M series

Miniature resistive joysticks

Distinctive features and specifications



- ❑ World's #1 selling joystick for CCTV applications
- ❑ Potentiometric sensing
- ❑ One, two or three axis
- ❑ Low profile design with 17 handle options
- ❑ RoHS

MECHANICAL (FOR X AND Y AXIS)

- Break Out Force: 0.7N (0.16lbf)
- Operating Force: 1.3N (0.29lbf)
- Maximum Applied Force: 100N (22.48lbf)
- Mechanical Angle of Movement: 56°
- Expected Life: See potentiometer options
- Mass/weight: Varies
- Package Size (mm) (L x W x H) or (Dia x H): Varies
- Lever Action (Centering): Spring or Friction

MECHANICAL (FOR Z AXIS)

- Break Out Torque: 0.022N·m (0.19lbf·in)
- Operating Torque: 0.040N·m (0.35lbf·in)
- Maximum Allowable Torque: 0.049N·m (0.43lbf·in)
- Mechanical Angle: 90°
- Handle Action: Spring

ENVIRONMENTAL

- Operating Temperature: -25°C to 70°C (-13°F to 158°F)
- Storage Temperature: -40°C to 70°C (-40°F to 158°F)

POTENTIOMETER OPTIONS

Potentiometer	P	M	R
Electrical Element	Conductive Plastic	Conductive Plastic	Conductive Plastic
Track Resistance	5K	5K	5K
Linearity	±1.0%	±5.0%	±1.0%
Track Operating Angle	220°	56°	50°
CRV	±1.5%	±1.5%	±1.0%
Power Dissipation	0.25W@40°C	0.5W@70°C	1W
Rotational Life	1,000,000	1,000,000	10,000,000

CENTERING OPTIONS

- **SPRING CENTERING**: The joystick returns to center when the handle is released.
- **TORQUE SET**: Torque set provides absolute positioning with uniform friction applied to "X" and "Y" axis.

NOTES:
- All values are nominal.
- Specifications are subject to the joystick configuration. Contact Technical Support for the performance of your specific configuration.
- The M Series is intended for internal applications.

Note: The company reserves the right to change specifications without notice.

M series
Miniature resistive joysticks

Overview

M | | 1 | | | | 1 |

SERIES

Mounting Bezel

C	Split Bezel
F	Square Bezel
L	Rubber Boot Kit

Model

1	2 Axis
2	2 Axis with Pushbuttons
3	3 Axis
4	3 Axis with Pushbuttons

Centering

0	Spring Centering
6	Torque Set (Friction)

Handle

0	Tapered Convex
1	Concave Tip
2	Flat Tipped
3	Concave Tip - Long
5	Pushbutton
6	Straight Tip - Short
8	3 Axis
9	3 Axis with Pushbutton
A	Straight Tip - Mid
B	Straight Tip - Long
C	Ball Tip
E	Pushbutton
G	Pushbutton
H	Pushbutton
M	3 Axis No Button
N	3 Axis with 1 Button
Q	3 Axis with 2 Buttons

Output Options

Potentiometers[3]:

P	5KΩ, 220°
M	5KΩ, 56°
R	5KΩ, 50°

INSTALLATION

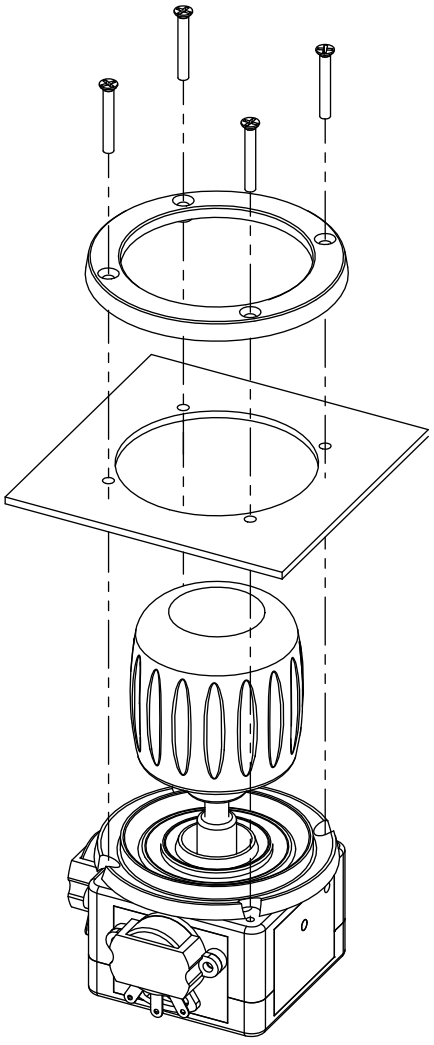

NOTES:

1. Front Mounting Bezels (FM)



C = Split Bezel
Cutout dimensions = 39.70mm(1.562in)



L = Rubber Boot
Cutout dimensions = 39.70mm(1.562in)

2. Rear mounting bezels (RM)



F = Square Bezel
Cutout dimensions = 30.15mm(1.187in)

3. Potentiometer specifications are located on the previous page.

Mounting accessories.

Standard hardware includes:
C= Ring, cup, and 4 black Phl screws 2-56x1/2in
L= Ring and 4 black Phl screws 2-56x1/2in
F= Square bezel, 4 screws 2-56x1/2in Phl, and 4 screws 2-56x1/4in Phl

Note: The company reserves the right to change specifications without notice.

2 AXIS WITH OPTION A HANDLE



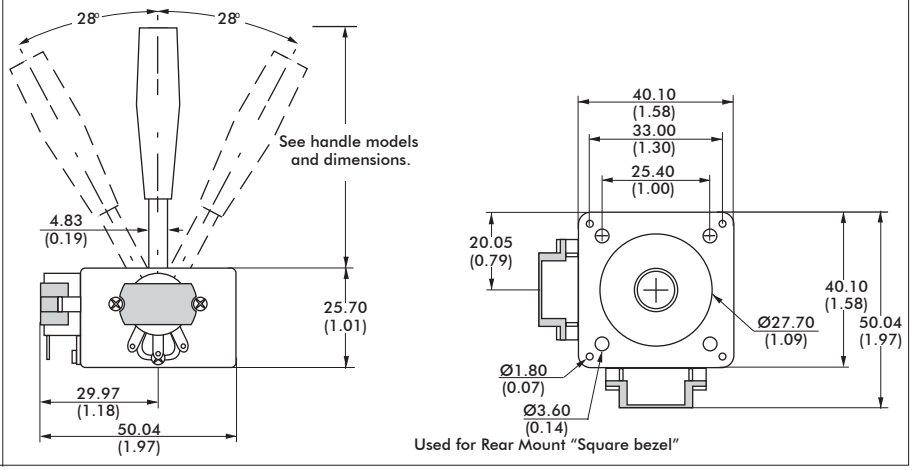

NOTES:
1. Mechanical dimensions represent a joystick with the largest potentiometer option.
2. Potentiometer size will vary according to selected option.

HANDLES

2 AXIS

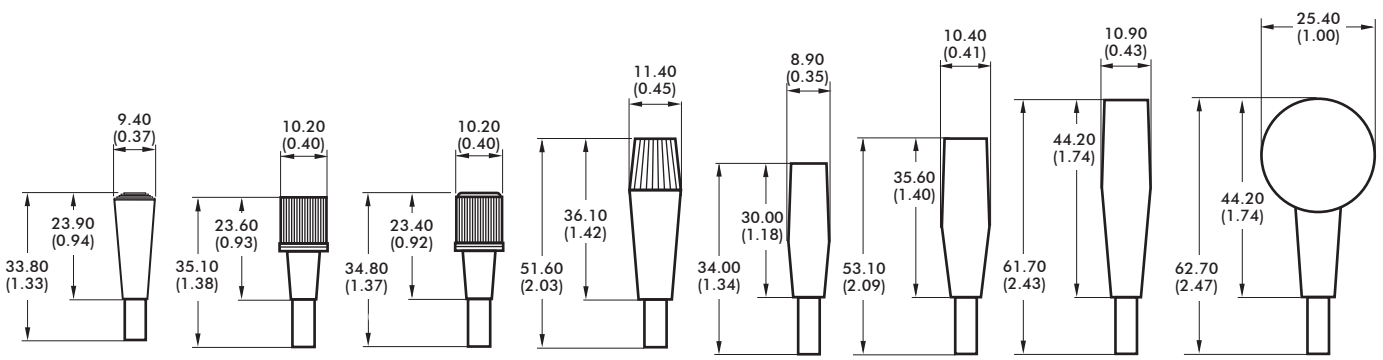

2 AXIS WITH PUSHBUTTON[1]

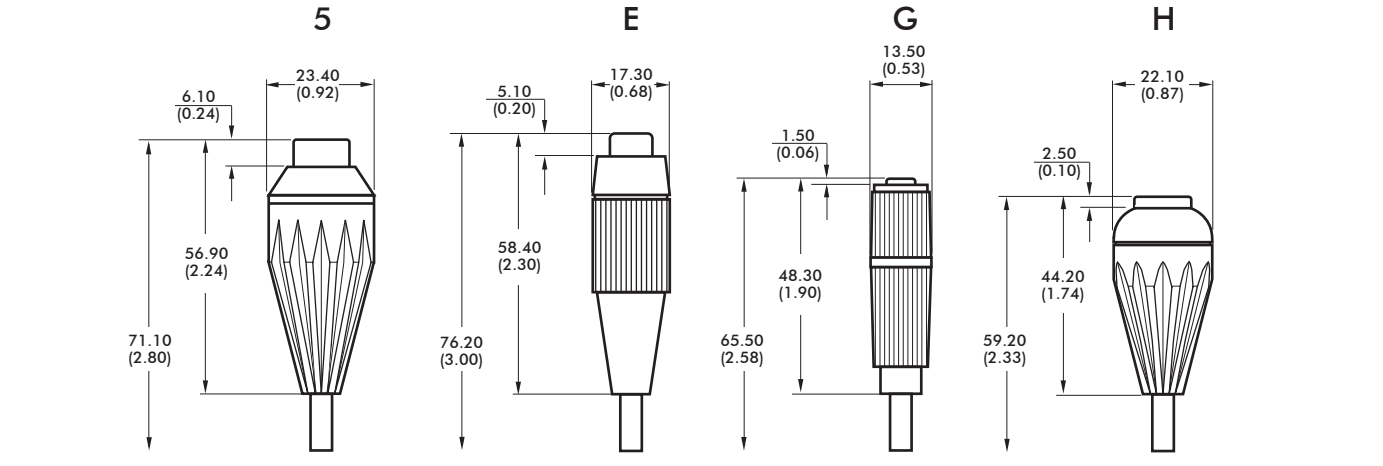

NOTES:
1. Pushbuttons are not sealed. Joysticks are intended for internal applications only.
2. Dimensions are in mm/(inch).

Note: The company reserves the right to change specifications without notice.

M series
Miniature resistive joysticks

Overview

3 AXIS

8

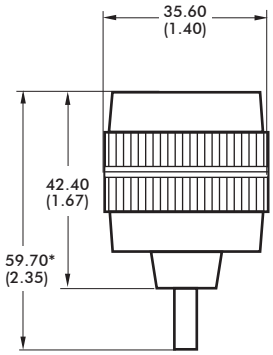

M

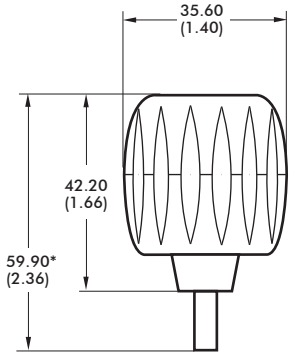

3 AXIS WITH PUSHBUTTONS

9

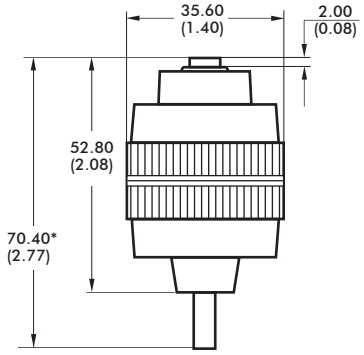

N

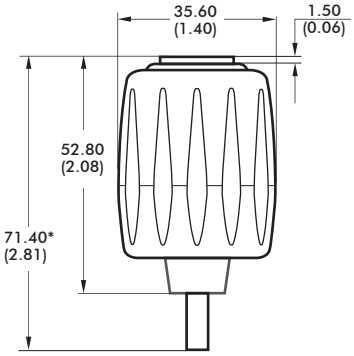

Q

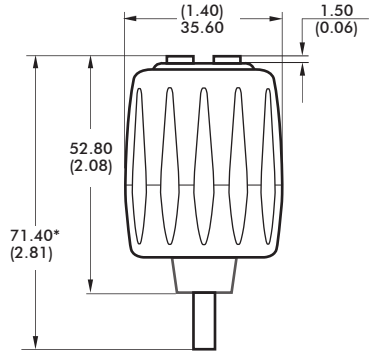

NOTES:
1. Dimensions are in mm/(inch).
2. Pushbuttons are not sealed. Joysticks are intended for internal applications only.
3. Axis orientation:

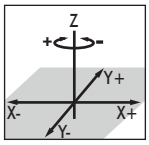

4. Wiring information:
   - Cables are provided for pushbuttons and the Z axis.
   - Cables are not supplied for the potentiometers (axis X and Y).

DEFAULT WIRE COLOR CODE*		
COLOR	FUNCTION	AWG
2 OR 3 AXIS JOYSTICK WITH 1 PUSHBUTTON - OPTIONS 5,E,G,H,9,N		
ORANGE	Switch 1	28
ORANGE	Switch Common	
3 AXIS JOYSTICK WITH 2 PUSHBUTTONS - Option Q**		
ORANGE	Switch 1	
BROWN	Switch 2	28
GREEN	Switch Common	
Z AXIS IN A 3 AXIS JOYSTICK - OPTIONS 8,9,M,N,Q		
RED	Supply	
WHITE	Signal	28
BLUE	Return	

NOTES: * Wires for the Z axis and for the pushbuttons are 292mm (11.5in) and stripped.
** Handle "Q" pushbuttons are shown in the following drawing:

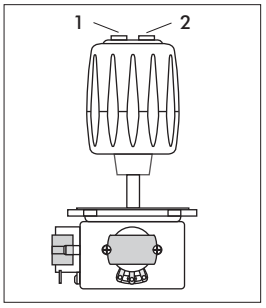

Note: The company reserves the right to change specifications without notice.