THERMASGARD® ATF 1
THERMASGARD® ATF 01

Outside temperature sensors / wet room temperature sensors with passive output

S+S REGELTECHNIK

Outside wall resistance thermometer / weather sensor **THERM**ASGARD® **ATF 1** (internal sensor) with passive output, housing made of impact-resistant plastic and quick-locking screws.

Outside wall resistance thermometer / weather sensor **THERM**ASGARD® **ATF 01** (internal sensor) with passive output, housing made of impact-resistant plastic and snap-on lid.

It is used to measure outside temperatures, temperatures in wet room areas, e.g. as an outdoor sensor, weather sensor for installation on outside walls, in cold storage buildings and greenhouses, in halls, in the industrial sector and in agriculture. Installation in outdoor areas preferably at the north side of a building or in a protected place. In cases of direct solar irradiation, we recommend the use of our **WS01** or **WS04** sun protection hood (accessory).

1x two-wire connection
standard

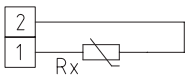

1x two-wire connection
LM235Z (KP10)

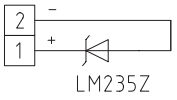

1x four-wire connection
(optional)

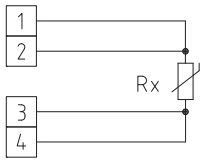



TECHNICAL DATA

Measuring range:	–50...+90 °C
Sensors / output:	passive (see table), sensors internal
Connection type:	2-wire connection (4-wire connection on PT100 / PT1000A, optional on other sensors)
Testing current:	< 0.6 mA (Pt1000) < 1.0 mA (Pt100) < 0.3 mA (Ni1000, Ni1000 TK5000) < 2.0 mW (NTC xx) 400 µA...5 mA (LM235Z)
Housing:	plastic, UV-resistant, material polyamide, 30 % glass-globe reinforced, colour traffic white (similar to RAL 9016), **ATF 01 with snap-on lid,** **ATF 1 with quick-locking screws** (slotted / Phillips head combination)
Housing dimensions:	72 x 64 x 37.8 mm (Tyr 1 / Tyr 01)
Cable connection:	**cable gland**, plastic (M 16 x 1.5; with strain relief, exchangeable, max. inner diameter 10.4 mm) **or** **M12 connector** according to DIN EN 61076-2-101
Electrical connection:	0.14 - 1.5 mm², via terminal screws
Insulating resistance:	≥ 100 MΩ, at +20 °C (500 V DC)
Humidity:	< 95 % RH, non-precipitating air
Protection class:	III (according to EN 60 730)
Protection type:	**ATF 01 IP 54** (according to EN 60 529) Housing tested, TÜV SÜD, Report No. 713160960A (Tyr 01) **ATF 1 IP 67** (according to EN 60 529) Housing tested, TÜV SÜD, Report No. 713139052 (Tyr 1)

THERMASGARD® ATF 01 Outside temperature sensors / wet room temperature sensors, *Standard* with snap-on lid

Type / WG03	Sensor / Output	Item No.	Price
ATF 01		**IP 54**	
ATF01 Pt100	Pt100 (according to DIN EN 60 751, class B)	1101-1030-1003-000	**15,75 €**
ATF01 Pt1000	Pt1000 (according to DIN EN 60 751, class B)	1101-1030-5001-000	**18,44 €**
ATF01 Ni1000	Ni1000 (according to DIN EN 43 760, class B, TCR = 6180 ppm / K)	1101-1030-9001-000	**19,26 €**
ATF01 NiTK	Ni1000 TK5000 (TCR = 5000 ppm / K), LG - Ni1000	1101-1031-0001-000	**22,35 €**
ATF01 LM235Z	LM235Z (TCR = 10 mV / K; 2.73 V at 0 °C), KP10	1101-1032-1001-000	**16,23 €**
ATF01 NTC1,8K	NTC 1.8 K	1101-1031-2001-000	**14,96 €**
ATF01 NTC10K	NTC 10K	1101-1031-5001-000	**14,96 €**
ATF01 NTC20K	NTC 20K	1101-1031-6001-000	**14,96 €**
Extra charge:	Other sensors optional Cable connection with **M12 connector** according to DIN EN 61076-2-101	on request on request	
ACCESSORIES			
WS-01	**Sun and ball-impact protection hood,** 184 x 180 x 80 mm, stainless steel **V2A** (1.4301)	7100-0040-2000-000	**32,72 €**
WS-04	**Weather and sun protection hood,** 130 x 180 x 135 mm, stainless steel **V2A** (1.4301)	7100-0040-7000-000	**38,61 €**
	For further information see last chapter!		

Dimensional drawing

ATF 1
ATF 01

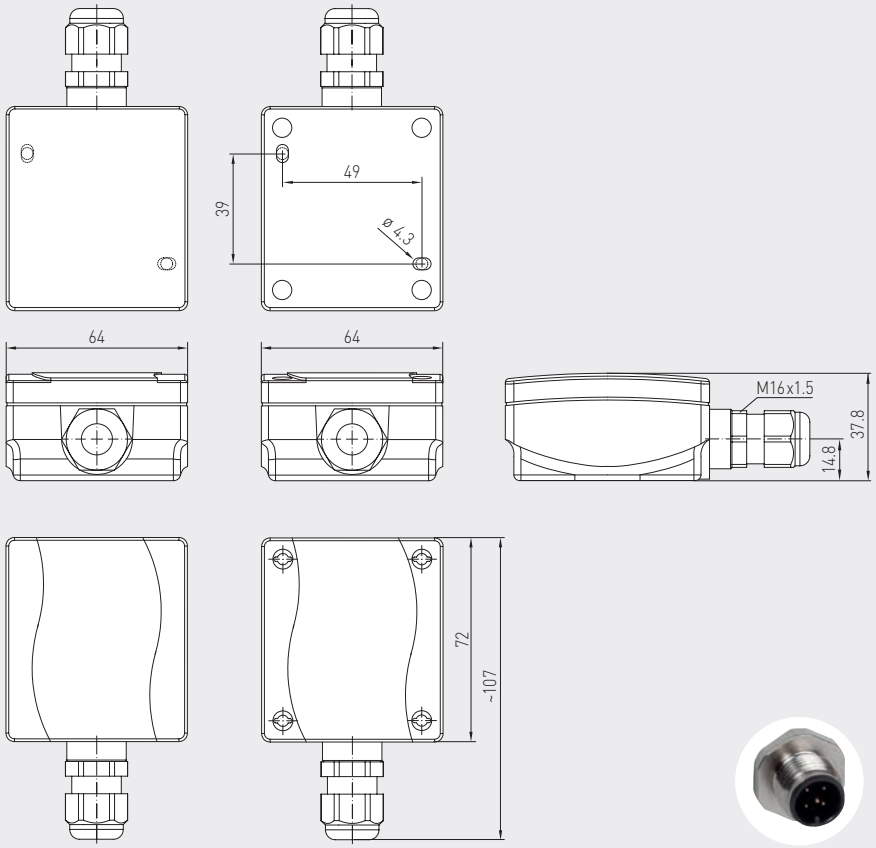

with snap-on lid

with quick-locking screws

M12 connector
(optional on request)

ATF 01
with snap-on lid
(IP 54)



ATF 1
with quick-locking screws
(IP 67)



THERMASGARD® ATF 1	Outside temperature sensors / wet room temperature sensors, *Premium* with quick-locking screws		
Type / WG03	**Sensor / Output**	**Item No.**	**Price**
ATF 1		**IP 67**	
ATF1 Pt100	Pt100 (according to DIN EN 60 751, class B)	1101-1040-1003-000	**18,20 €**
ATF1 Pt1000	Pt1000 (according to DIN EN 60 751, class B)	1101-1040-5001-000	**20,89 €**
ATF1 Pt1000A	Pt1000 (according to VDI / VDE 3512, class A-TGA)	1101-1040-6003-000	**24,42 €**
ATF1 Ni1000	Ni1000 (according to DIN EN 43 760, class B, TCR = 6180 ppm / K)	1101-1040-9001-000	**20,39 €**
ATF1 NiTK	Ni1000 TK5000 (TCR = 5000 ppm / K), LG-Ni1000	1101-1041-0001-000	**24,80 €**
ATF1 LM235Z	LM235Z (TCR = 10 mV / K; 2.73 V at 0 °C), KP10	1101-1042-1001-000	**18,67 €**
ATF1 NTC1,8K	NTC 1.8 K	1101-1041-2001-000	**16,61 €**
ATF1 NTC10K	NTC 10K	1101-1041-5001-000	**16,61 €**
ATF1 NTC20K	NTC 20K	1101-1041-6001-000	**16,61 €**
Extra charge::	Other sensors optional Cable connection with **M12 connector** according to DIN EN 61076-2-101	on request on request	
ACCESSORIES			
WS-01	**Sun and ball-impact protection hood,** 184 x 180 x 80 mm, stainless steel **V2A** (1.4301)	7100-0040-2000-000	**32,72 €**
WS-04	**Weather and sun protection hood,** 130 x 180 x 135 mm, stainless steel **V2A** (1.4301)	7100-0040-7000-000	**38,61 €**
	For further information see last chapter!		