Magnetic Proximity Sensors (Reed)

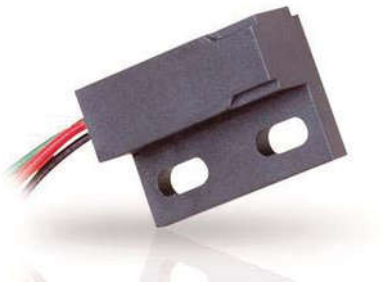

MP2019 Sensors

Reed based magnetic proximity sensor
in plastic flange-mount package

Description

The MP2 Series sensors are reed position sensors. Normally open or closed contacts change states when a magnetic field is applied. The sensors act as non-latching electrical switches.

Features

- Contacts hermetically sealed for long life
- Zero power consumption
- Suitable for DC and AC circuits
- Flange mount
- RoHS compliant
- IP65
- Operate/Release Distances*: 10.16 mm – 22.86 mm (0.4” – 0.9”)

Typical Applications

- Door position & interlock
- Limit switch
- Flow/speed
- Home security
- Pedal switch

Environmental Specifications

Vibration	20 g 10 Hz to 1 kHz (MP201901), 20 g 10 Hz to 55 Hz (MP201902, M201903)
Operating Temperature	-40 °C to 105 °C (-40 °F to 221 °F)
Storage Temperature	-40 °C to 105 °C (-40 °F to 221 °F)
Ingress Protection	IP65

Electrical Specifications

Typical Operating Time	1 ms
Breakdown Voltage	200 VDC min.
Switching Voltage and Current	See Products chart
Contact Resistance and Power rating:	See Products chart

Mechanical Specifications

Housing Material	Glass-reinforced plastic
Operate/Release Distances* *with AS201901 magnetic actuator	10.16 mm – 22.86 mm (0.4” – 0.9”)

Products

Part Number	Contact Form	Maximum Power Rating	Maximum Switching Voltage	Maximum Switching Current	Maximum Contact Resistance
MP201901	SPST-NO Form A	10 W	175 VAC/VDC	0.5 A	0.200 Ω
MP201902	SPST-NC Form B	3 W	30 VAC/VDC	0.2 A	0.100 Ω
MP201903	SPDT-CO Form C	3 W	30 VAC/VDC	0.2 A	0.100 Ω

All MP2019 sensors come with leads 24 AWG x 305 mm (12”)

Dimensions mm (inches)

MP201901 (Form A - N.O.) and MP201902 (Form B - N.C.)

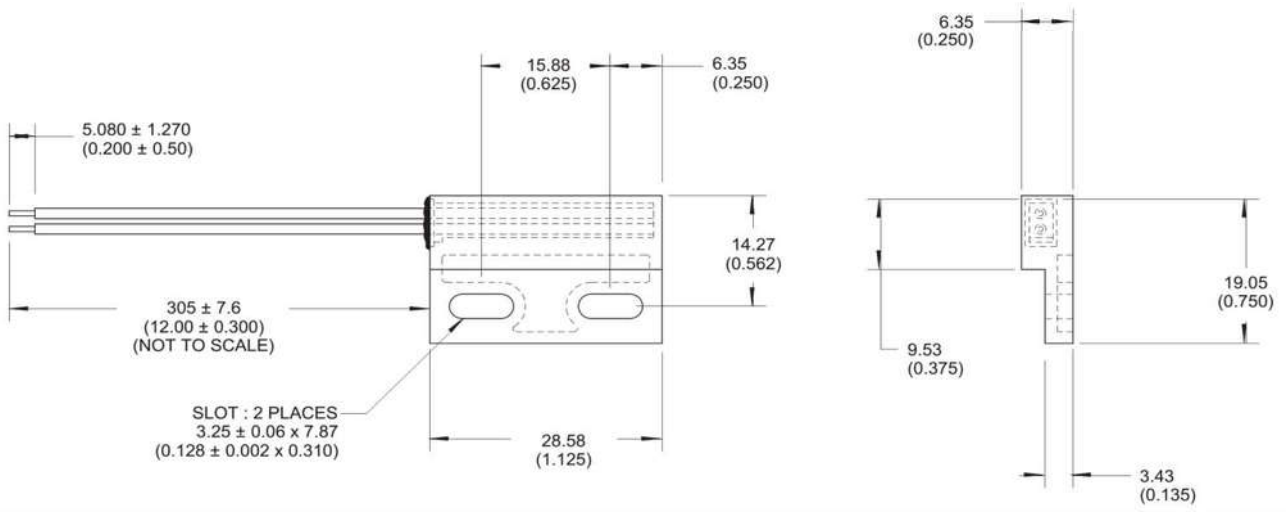

MP201903 (Form C - SPDT Changeover)

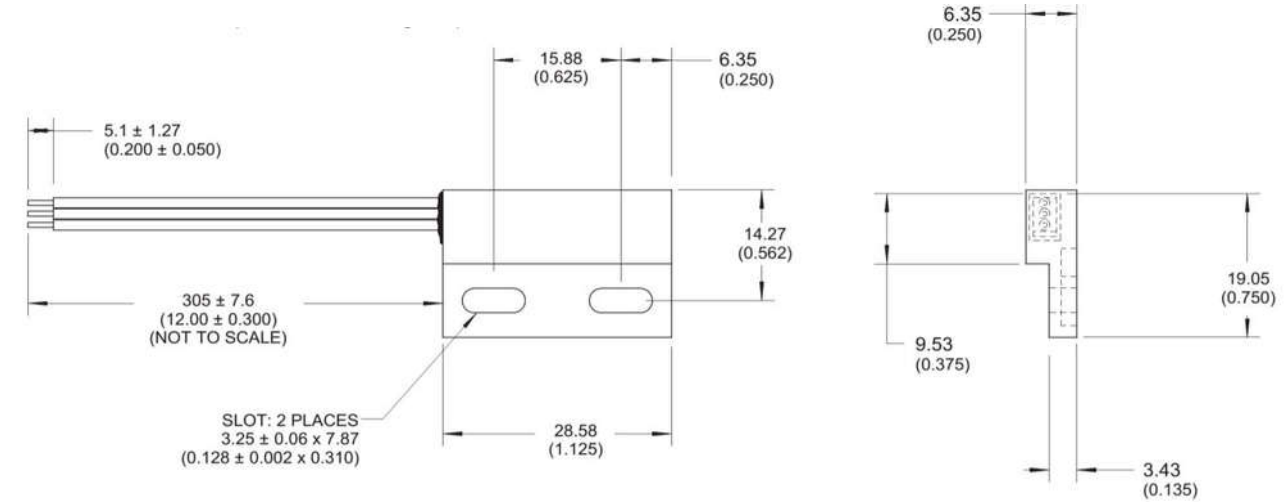

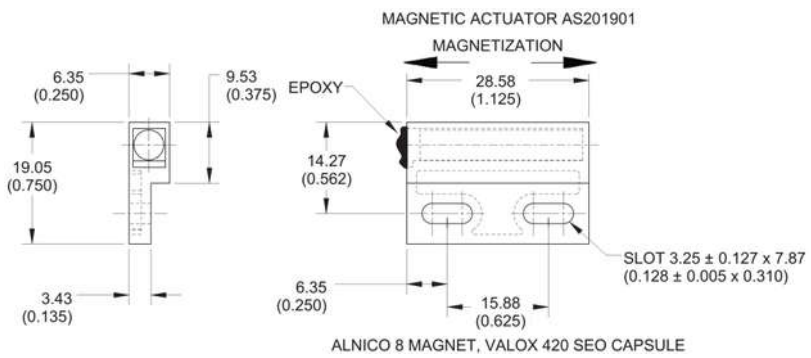

Wire designations	
BLACK	NO
BLUE	NC
BROWN	COMMON

Alignment for Best Performance

