

**Spring-rod actuator, metal**

| | |
|---|---|
| **Part no.** | **LSM-XS** |
| **Article no.** | **266163** |

| | |
|---|---|
| **Catalog No.** | **LSM-XS** |

## Delivery programme

| | | | |
|---|---|---|---|
| Basic function | | | Operating heads |
| Part group reference | | | LS(M)-… |
| Product range | | | Spring-rod actuator |
| Description | | | Not to be used as a safety position switch |
| For use with | | | Basic devices LS(M)… |
| Snap-action contact | | | Only permissible with snap-action contact |

**Notes** The operating head can be rotated at 90° intervals to adapt to the specified approach direction.

## Approvals

| | |
|---|---|
| Product Standards | IEC/EN 60947-5; UL 508; CSA-C22.2 No. 14; CE marking |
| UL File No. | E29184 |
| UL Category Control No. | NKCR |
| CSA File No. | 12528 |
| CSA Class No. | 3211-03 |
| North America Certification | UL listed, CSA certified |

## Technical data ETIM 5.0

Sensors (EG000026) / Drive head for position switches/hinge switches (EC001483)

Electric engineering, automation, process control engineering / Binary sensor technology, safety-related sensor technology / Position switch / Drive head for position switches (ecl@ss8-27-27-06-04 [BAA083008])

| | | | |
|---|---|---|---|
| Type of control element | | | Spring-rod |

## Dimensions

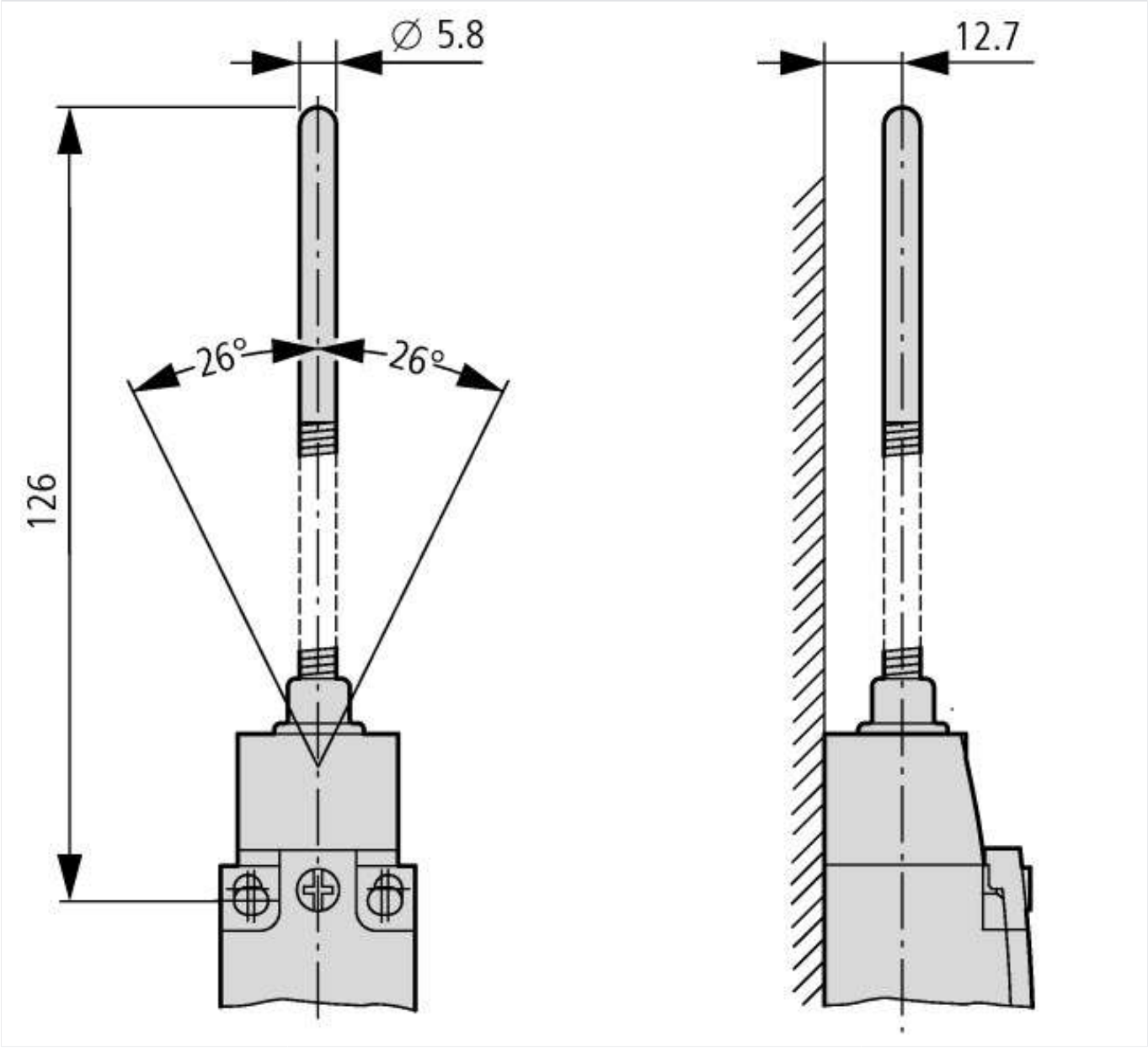



© 07/2014 by Eaton Industries GmbH