USER MANUAL

DIRIS A14

Multifunction measuring unit - PMD with MID certification

EN



www.socomec.com/en/diris-a14

www.socomec.com

socomec
Innovative Power Solutions

EN CONTENTS

1. DOCUMENTATION 3
2. RISKS AND WARNINGS 4
2.1. Risk of electrocution, burns or explosion 4
2.2. Risks of damaging the device 4
2.3. Liability 4
3. PRELIMINARY OPERATIONS 5
4. INTRODUCTION 6
4.1. Introduction to the DIRIS A14 6
4.2. Functions 6
4.3. Front view 6
4.4. Dimensions 6
4.5. Measured electrical dimensions 7
5. INSTALLATION 8
5.1. Recommendation and safety 8
5.2. DIN rail mounting 8
5.3. Door mounted 8
6. CONNECTION 9
6.1. DIRIS A14 connection 9
6.2. Connecting to the electrical network and to loads 10
6.2.1. Loads can be configured depending on the type of network 10
6.2.2. Description of the main network and load associations 10
7. MID COMPLIANCE 12
8. COMMUNICATION 13
8.1. Overview 13
8.2. RS485 rules 13
8.3. Communication structure 14
8.4. Communication tables 14
9. CONFIGURATION 15
9.1. Configuring using the screen 15
9.1.1. Example: configuring the choice of current transformer 16
9.1.2. Overall view of the programming menu 17
9.1.3. Detailed view of the programming menu 19
10. USE 21
10.1. Detailed view of the energy menu 22
10.2. Detailed view of the measurement menu 23
11. CONNECTION TEST FUNCTION 24
12. ASSISTANCE 26
13. FEATURES 27
14. PERFORMANCE CLASSES 29
14.1. Feature specifications 29
15. LIST OF ABBREVIATIONS 30

1. DOCUMENTATION

All documentation on the DIRIS A14 is available on the website at the following address:
www.socomec.com/en/diris-a14

2. RISKS AND WARNINGS

The term "device" used in the paragraphs below refers to the DIRIS A14.

This equipment may only be installed, used, serviced and maintained by trained, qualified professionals.

Failure to comply with the instructions in this manual will invalidate SOCOMEC's liability.

2.1. Risk of electrocution, burns or explosion

- This device must only be installed and serviced by qualified personnel who have in-depth knowledge of installing, commissioning and operating the device and who have had appropriate training. They are deemed to have read and understood the different safety measures and warnings in these instructions.
- Before working on the device, disconnect the voltage inputs and short circuit the secondary of each current transformer (SOCOMEC PTI).
- Always use an appropriate voltage detector to confirm that there is no voltage going through.
- Replace all devices, doors and covers before connecting the device to the power again.
- Always use the correctly rated voltage to power this device.
- Install the device in accordance with the recommended installation instructions and in a suitable electrical cabinet.

Failure to take these precautions could cause serious injuries or death.

2.2. Risks of damaging the device

Please observe the following to ensure that the device works properly:

- the device is installed properly.
- a maximum voltage at the voltage input terminals of 460 V AC phase-phase or 265 V AC phase-neutral
- the frequency of the network indicated on the product: 50 or 60 Hz.
- a maximum current of 20 A on the current input terminals (I1, I2 and I3).

Failure to take these precautions could lead to damage to the device.

2.3. Liability

- The device must be installed, connected and used in accordance with the installation standards in force.
- The device must be installed in compliance with the rules in these instructions.
- Failure to observe the installation rules for this device may compromise the intrinsic protection of the product.
- The device must be put in an installation which itself complies with the standards in force.
- If a cable has to be replaced this must be replaced with a cable with the appropriate features.

3. PRELIMINARY OPERATIONS

To ensure the safety of staff and the equipment, it is vital to read and absorb the contents of these instructions thoroughly before commissioning.

The following points must be checked as soon as you receive the package containing the device and one or more sensors:

- the packaging is in good condition,
- the device has not been damaged during transit,
- the device reference number is the same as on your order,
- The package includes:
  - 1 product
  - 1 sealing kit (ref. 4850 304U)
  - 1 line resistor (ref. 4899 0019)
  - 1 Quick start

4. INTRODUCTION

4.1. Introduction to the DIRIS A14

The DIRIS A14 is an MID-certified PMD*. This multifunction measuring unit is suitable for monitoring and managing a network's electrical energy. The DIRIS A14 supplies voltage, current, power and energy measurements. Users can easily access all the product functionalities using the screen and the push buttons. It is fitted with an RS485 modbus communication bus. It can be fitted on a door (opening 92x92 mm) using a housing kit (accessory).

4.2. Functions

Multifunction measuring unit - PMD*

- Electrical parameter measurements: I, U, V
- Power, power factor
- Imported and exported active and reactive energy
- RS 485 modbus communication

Description	***Reference***
DIRIS A14 with RS485 modbus communication	4825 **0020**
92x92 mm housing kit accessory	4825 **0070**

** PMD: Performance Measuring and monitoring Device in accordance with CEI 61557-12.*

4.3. Front view

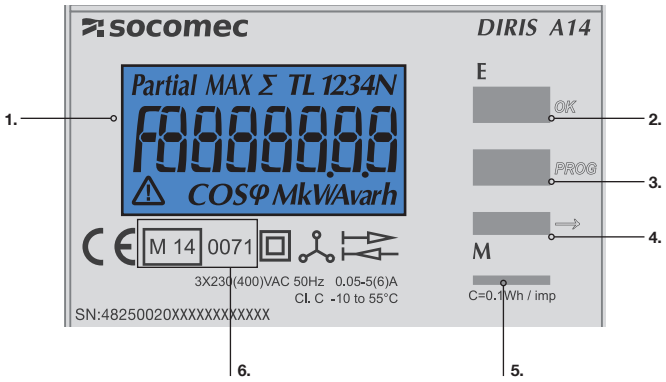

1. Backlit LCD screen.
2. Access to energies and programming validation.
3. Access to programming menu.
4. Access to electrical parameters and power levels.
5. Metrological LED on active energy - 0.1Wh / impulse
6. Information relating to MID certification.

4.4. Dimensions

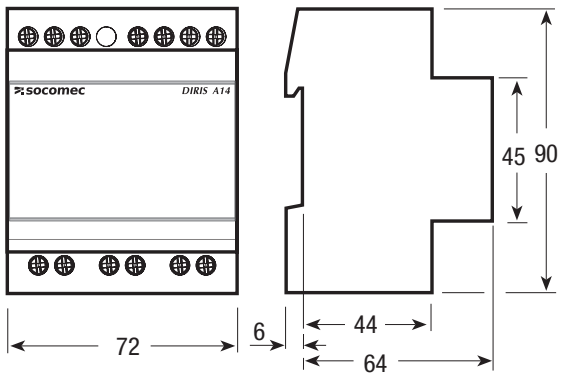

4.5. Measured electrical dimensions

Three-phase dimension			***LCD display***	***Via modbus communication***
Active energy	consumed (Ea+)	Total:	total ∑Ti with 10Wh resolution	kWh and 10Wh on Ti and total ∑Ti
		partial	total ∑Ti with 10Wh resolution	kWh and 10Wh on Ti and total ∑Ti
	produced (Ea-)	Total:	resolution 10 Wh	kWh and 10Wh
		partial	resolution 10 Wh	kWh and 10Wh
Reactive energy	consumed (Er+)	Total:	resolution 10varh	kvarh and 10varh
		partial	resolution 10varh	kvarh and 10varh
	produced (Er-)	Total:	resolution 10varh	kvarh and 10varh
		partial	resolution 10varh	kvarh and 10varh
Active power	∑P+,-	three-phase	resolution 10W	kW and 10W
	Pi+,-	by phase	n.a.	kW and 10W
Reactive power	∑Q+,-	three-phase	resolution 10var	kvar and 10var
	Qi+,-	by phase	n.a.	kvar and 10var
Apparent power	∑S	three-phase	resolution 10VA	kVA and 10VA
	If	by phase	n.a.	kVA and 10VA
Power factor	∑ PF+,-	three-phase	n.a.	1/1000
	PFi+,-	by phase	n.a.	1/1000
Current:	I1,…IN	by phase	resolution 10mA	mA
Neutral voltage	V1,…V3	phase-neutral	resolution 10mV	10mV
Composed voltage	U1,…U3	phase-phase	resolution 10mV	10mV
Cosφ	Cosφ	three-phase	resolution 0.01	1/1000
	cosφi	by phase	n.a.	1/1000
Current distortion rate	THD I1,..I3	by phase	n.a.	1/100 %
Voltage distortion rate	THD Vi, Ui	by phase	n.a.	1/100 %
Frequency	f		n.a.	1/100 of Hz
Max. current	Max. I1,..IN	by phase	✓	✓
Max. active power	Max. ∑P+	three-phase	✓	✓
Max. reactive power	Max. ∑Q+	three-phase	✓	✓
Max. apparent power	Max. S	three-phase	✓	✓
Max. Cosφ	Max. ∑Cosφ	three-phase	✓	✓
Min. active power	Max. ∑P-	three-phase	✓	✓
Min. reactive power	Max. ∑Q-	three-phase	✓	✓
Min. cosφ	Max. ∑Cosφ-	three-phase	✓	✓
Dated load curve	∑P+	three-phase	n.a.	W
Energy consumption	Ea+ day, week, month, n and n-1	total	n.a.	kWh and 10Wh

Where Ti= Ea+ of tariff i, i=1 - 4; the tariff is selected by the communication bus.

n.a. = not available.

5. INSTALLATION

The paragraphs below describe how to install the device.

5.1. Recommendation and safety

Refer to the safety instructions (Chapter "2. Risks and warnings", page 4)

- Keep away from electromagnetic interference generator systems,
- Avoid vibrations with accelerations greater than 1 g for frequencies lower than 60 Hz.

5.2. DIN rail mounting

The DIRIS A14 unit may be snapped onto a 35 mm DIN rail (EN 60715TM35). It must be used in electrical cabinets.

5.3. Door mounted

The accessory (ref. 4825 0070) is also used to install the DIRIS A14 unit on a door with an opening of 92x92 mm.

Fitting the plate to hide the 92x92mm opening
4 M5 screw-in nuts: size 10 hexagonal recess tool

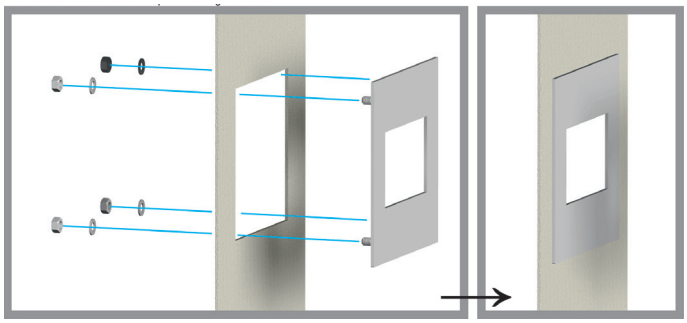

Fitting the rail accessory to the device
Clipping to the back of the device: no tools required

Installing the fitted device onto the external plate
Clipping the set onto the external plate: no tools required

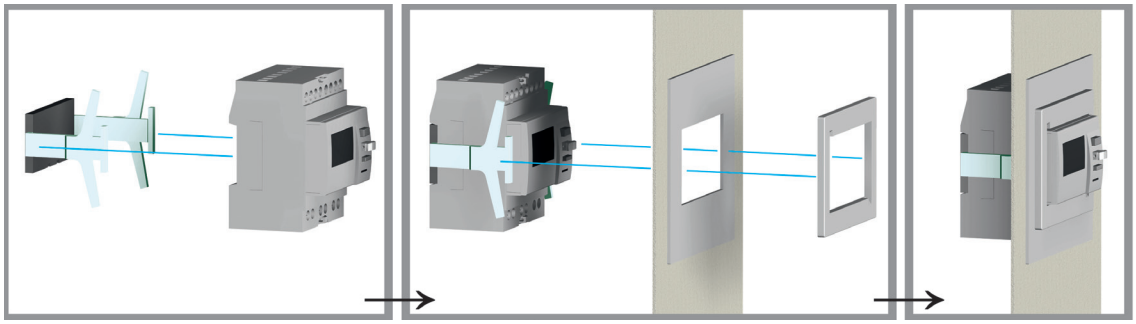

6. CONNECTION

6.1. DIRIS A14 connection

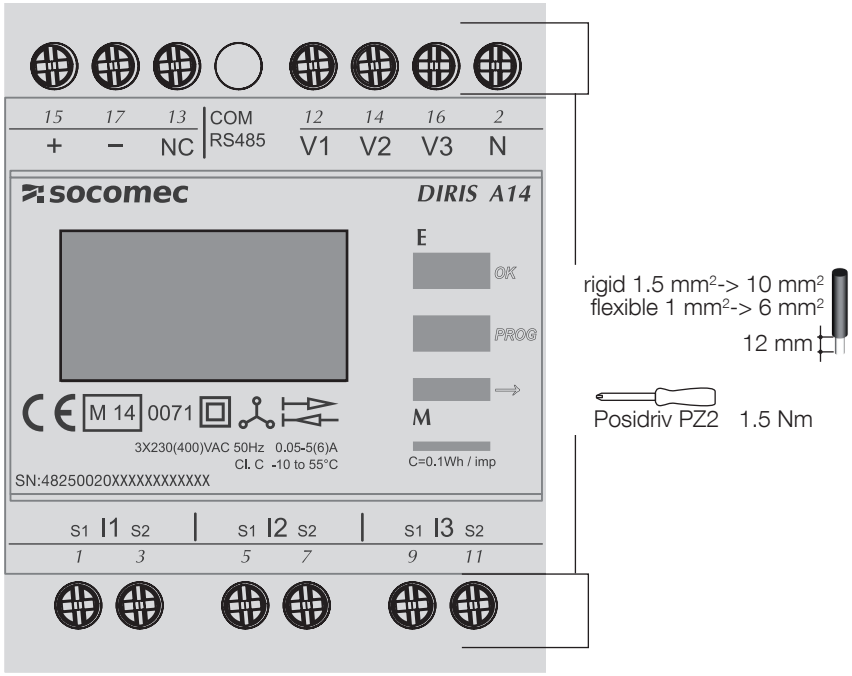

Communication terminal block

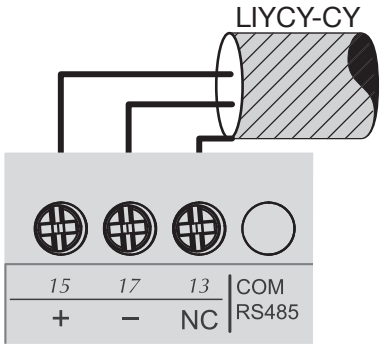

NC: not connected. May be used for shielding continuity.

6.2. Connecting to the electrical network and to loads

The DIRIS A14 can be used on single-phase, two-phase or three-phase networks.

6.2.1. Loads can be configured depending on the type of network

The table below summarises the loads that it is possible to configure depending on the type of network at the installation.

Network type	Configurable load
1P+N single-phase	1P+N – 1CT
2P two-phase	2P – 1CT
3P three-phase	3P – 3CT / 3P – 2CT / 3P – 1CT
3P+N three-phase	3P+N – 4CT / 3P+N – 3CT / 3P+N – 1CT / 3P – 3CT / 3P – 2CT / 3P – 1CT / 1P+N – 1CT

6.2.2. Description of the main network and load associations

Key:

3P+N – 3CT

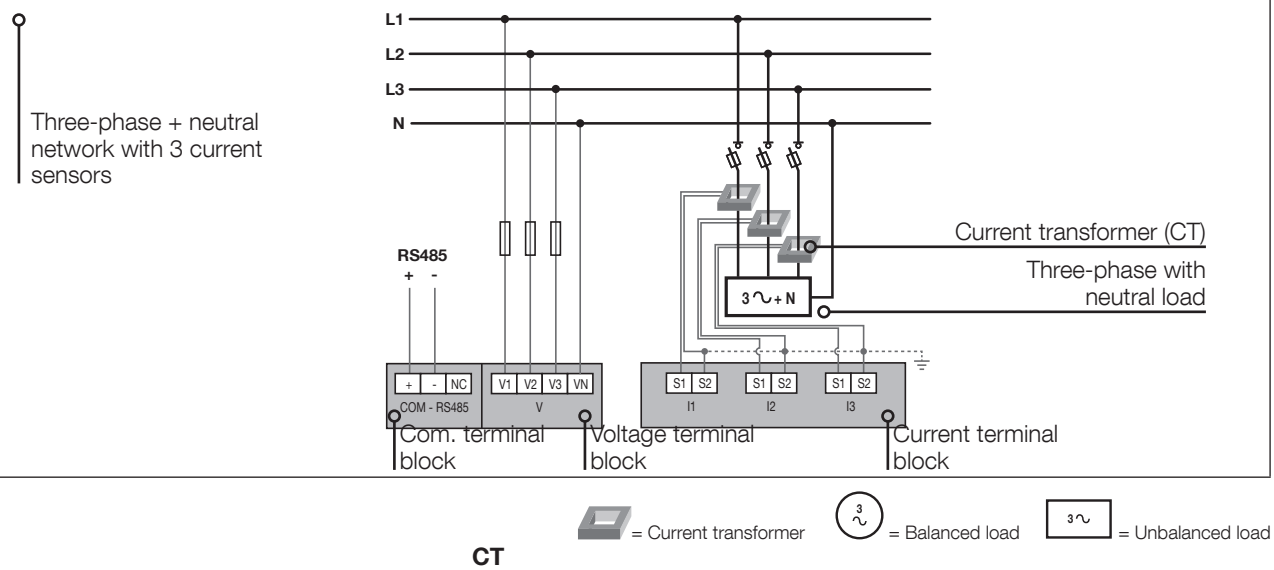

= Current transformer = Balanced load = Unbalanced load

CT

Unbalanced three-phase + neutral (4NBL)
3P+N – 3CT

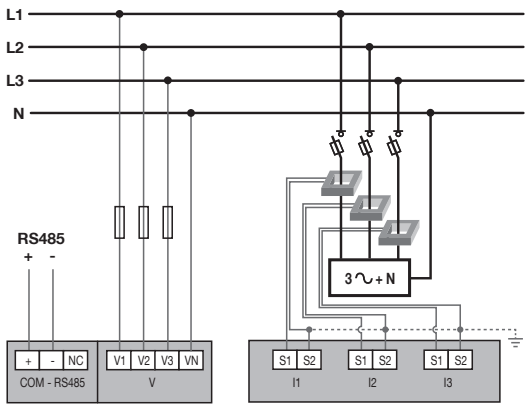

Unbalanced three-phase (3NBL)
3P - 3CT

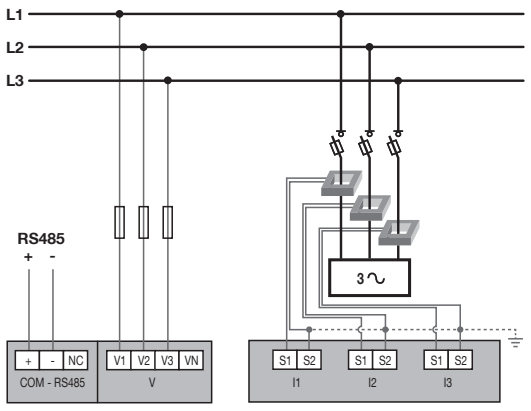

These 2 connections are MID-compliant.

Unbalanced three-phase (3NBL)
3P - 2CT

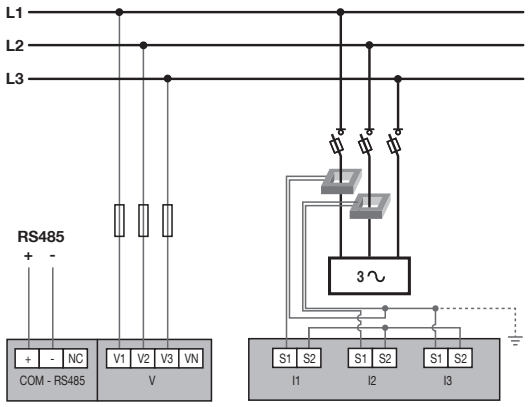

Unbalanced three-phase (3NBL)
3P - 2CT

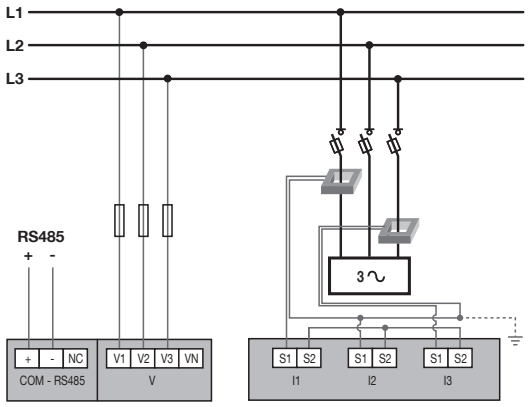

The 2CT solution reduces by 0.5% the accuracy of the phase for which the current is deduced by a vector calculation.

Unbalanced three-phase + neutral (4NBL)
3P+N – 1CT

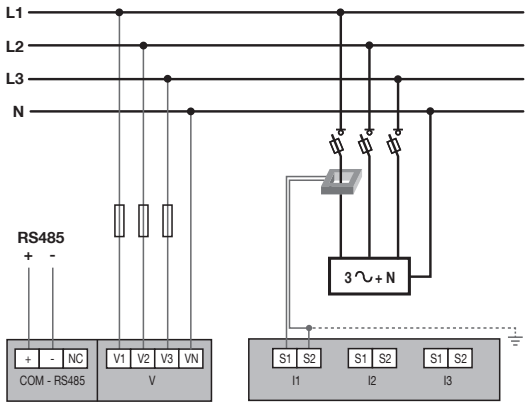

Balanced three-phase (3NBL)
3P – 1CT

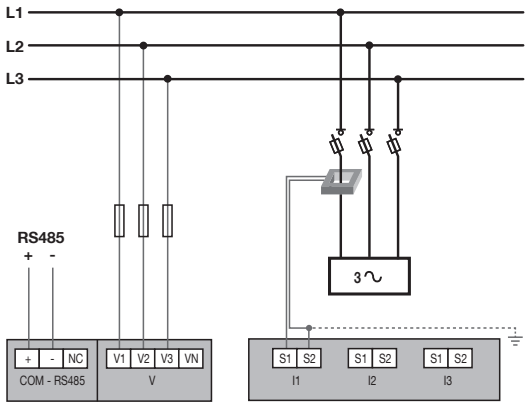

Balanced two-phase (2BL) 2P – 1CT

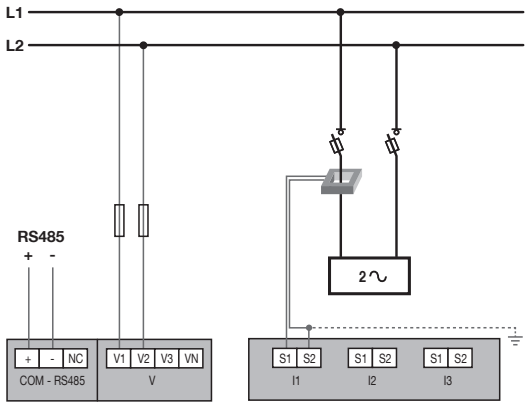

Single-phase (1BL) 1P+N – 1CT

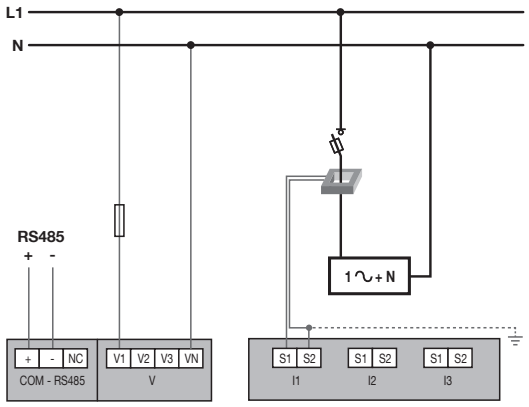

Fuse: 0.5 A gG / 0.5 A class CC

7. MID COMPLIANCE

The following points must be taken into consideration to ensure that the device is used in compliance with directive MID 2004/22/EC:

- **Type of network**
  The DIRIS A14 meter complies with the MID directive for connection to networks: 4NBL and 3NBL using 3CTs (see "6.2. Connecting to the electrical network and to loads", page 10)
- **Fitting terminal covers** (see fig.1)
  After connecting the product, ensure that the terminal covers are fitted properly and secured by the two plastic seals provided with the product.
- **Locking the programming button**
  Close the button cap by securing it with a seal (see fig.2)
- **RS485 communication**
  The information provided via the RS485 COM is transmitted for information only and has no legal value.
- **Declaration of MID conformity**
  The MID declaration of conformity is available on the website: www.socomec.fr

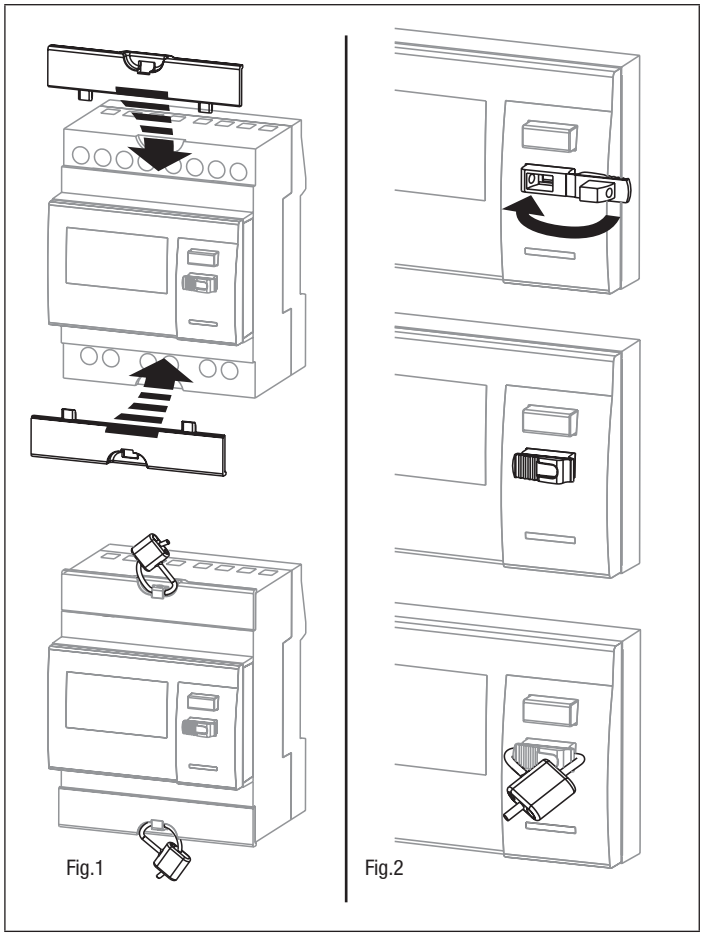

Fig.1

Fig.2

8. COMMUNICATION

8.1. Overview

The modbus available on the DIRIS A14 communicates via an RS485 series link (2 or 3 wires) which is used to operate products from a PC or an API.
In a standard configuration an RS485 connection is used to connect 32 products to a PC or a controller over 1200 metres.

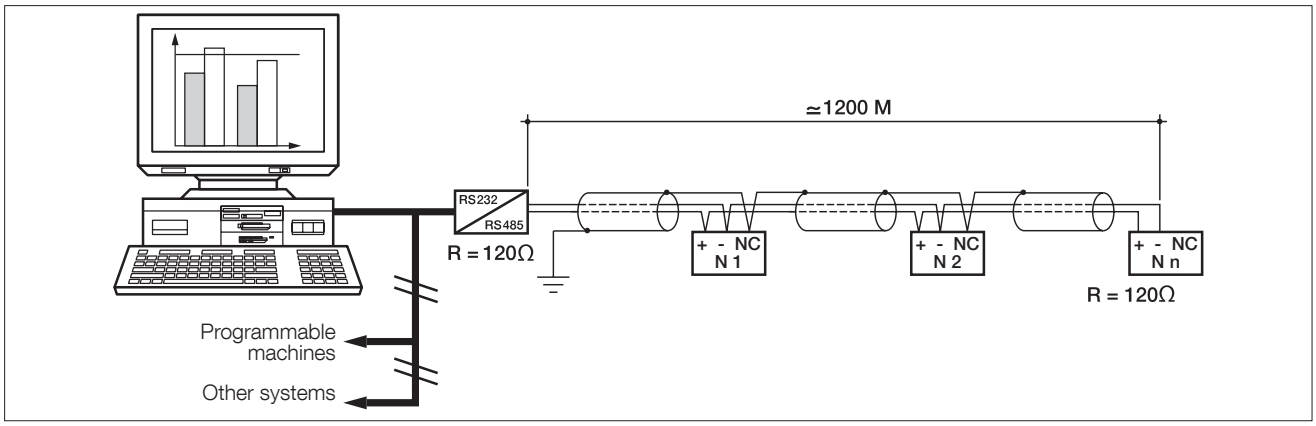

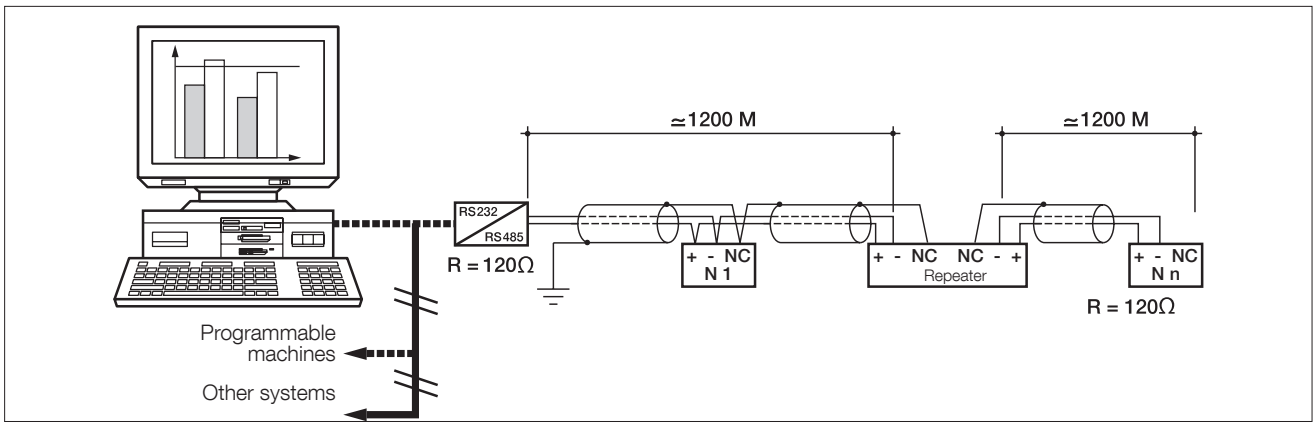

8.2. RS485 rules

A LIYCY shielded twisted pair must be used. We recommend using a shielded twisted pair with a general LIYCY-CY shielding in an environment where there is interference or in a very long network with a number of products.
If the distance of 1200 m is exceeded and/or the number of products is greater than 32, a repeater must be added to enable additional products to be connected.
A 120 Ohm resistor must be fixed at both ends of the connection.

8.3. Communication structure

The product communicates via a modbus protocol which involves a dialogue in accordance with a master/slave structure. The communication mode is the RTU (Remote Terminal Unit) mode with hexadecimal characters composed of at least 8 bits.

Modbus frame structure (master -> slave question):

Slave address	Function code	Address	Number of words to be read	CRC 16
1 byte	*1 byte*	*2 bytes*	*2 bytes*	*2 bytes*

To comply with the modbus protocol, the inter-character time must be ≤ 3 silences.
This means the time for 3 characters to be emitted so that the message is processed by the DIRIS A14.
In order to use the information correctly, you must use the modbus functions in accordance with the codes:

- 3: to read n words (maximum 128).
- 6: to write one word.
- 16: to write n words (maximum 128).

N.B.:
1 word <=> 2 bytes <=> 16 bits
2 words <=> 4 bytes <=> 32 bits

By selecting the slave address 0, a message is transmitted to all the devices on the network (only for functions 6 and 16).
Note: The response time (question/ response time out) is no more than 250 ms.

8.4. Communication tables

The communication tables and the associated explanations are available on the DIRIS A14 documentation page on the website at the following address:
www.socomec.com/en/diris-a14

XX = default value

9. CONFIGURATION

The device can be configured by the Easy Config configuration software or directly from the DIRIS A 14 screen using the programming mode. The paragraphs below describe configuring using the screen.

9.1. Configuring using the screen

On the screen, the programming mode is used to modify parameters, such as the type of network, current transformers or communication parameters. How to browse through the programming mode is described in the following stages:

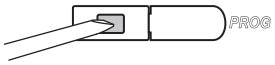	Go to programming mode **(using a screwdriver, press PROG for 3 seconds)** 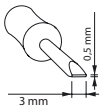
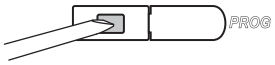	Go to the next menu **(press PROG once)**
	Modifies the current screen parameters
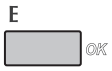	Validates the modification
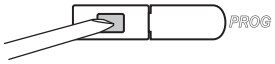	Exit programming mode **(press PROG for 3 seconds)**

Note: after 120 seconds of inactivity, the device exits programming mode without saving the changes (except for a reset).

9.1.1. Example: configuring the choice of current transformer

In programming mode (see page 15), go to the "Current Transformer - CT" screen.

Example: changing the transformation ratio to 800/5.

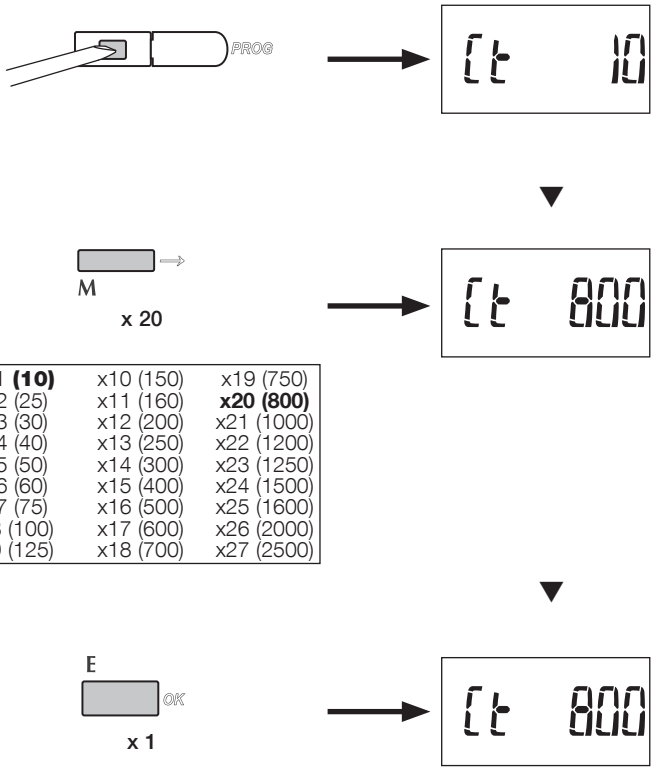

x1 (10)	x10 (150)	x19 (750)
x2 (25)	x11 (160)	**x20 (800)**
x3 (30)	x12 (200)	x21 (1000)
x4 (40)	x13 (250)	x22 (1200)
x5 (50)	x14 (300)	x23 (1250)
x6 (60)	x15 (400)	x24 (1500)
x7 (75)	x16 (500)	x25 (1600)
x8 (100)	x17 (600)	x26 (2000)
x9 (125)	x18 (700)	x27 (2500)

XX = default value

9.1.2. Overall view of the programming menu

Press PROG for 3 seconds and the device will go to programming mode.

The different screens can be accessed by pressing "PROG":

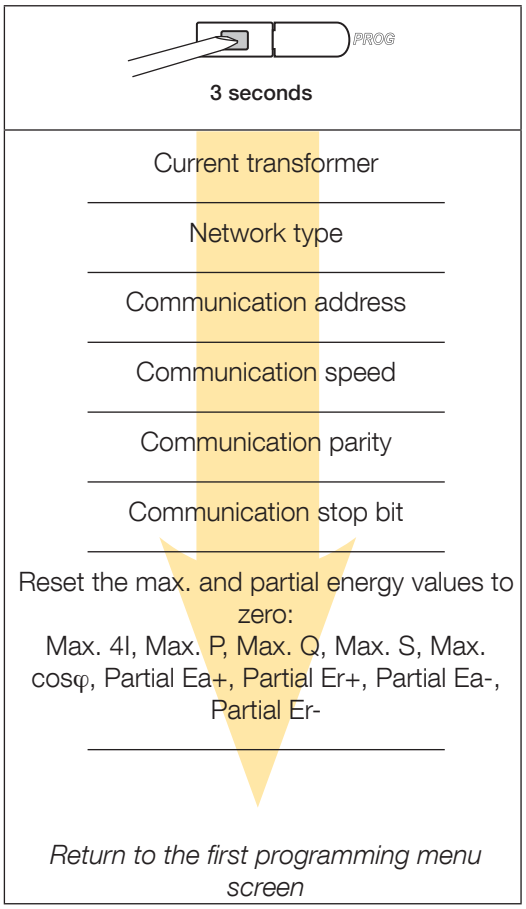

9.1.3. Detailed view of the programming menu



3 seconds

Current transformer	
Ct 10	**10**, 25, ..., 2000, 2500A



1x

Network type	
nEt4nbL	1BL, 2BL, 3BL, 3NBL, 4BL, **4NBL**

Communication address	
Add 5	1, 2, ... **5**, ..., 253, 254

Communication speed	
bd 9600	4800, **9600**, 19200, 38400

Communication parity	
PAr no	**no**, odd, even

Communication stop bit	
StoP 1	**1**, 2

Reset energies	
MAX rSt 41	**Max. 4I**, Max. P, Max. Q, Max. S, Max. cosφ, Partial Ea+, Partial Er+, Partial Ea-, Partial Er-

Return to the first programming menu screen

10. USE

The electric dimensions can be accessed using the dedicated buttons: **"Energy"** and **"Measurement"**. All the measurements relating to the button scroll down when you keep pressing the appropriate button. The available measurements are described in the table below:

Energy	Measurement
E OK	M
Total imported active and reactive energy	Instantaneous phase current
Total exported active and reactive energy	Max. phase current
Partial imported active and reactive energy	Instantaneous phase/phase voltages
Partial exported active and reactive energy	Instantaneous phase/ neutral voltages
	Instantaneous three-phase active, reactive and apparent powers
Return to the first energy menu screen	Max. three-phase active, reactive and apparent powers
	Min. three-phase active, reactive and apparent powers
	Instantaneous three-phase cosφ
	Max. three-phase cosφ
	Min. three-phase cosφ
	Return to the first measuring menu screen

10.1. Detailed view of the energy menu

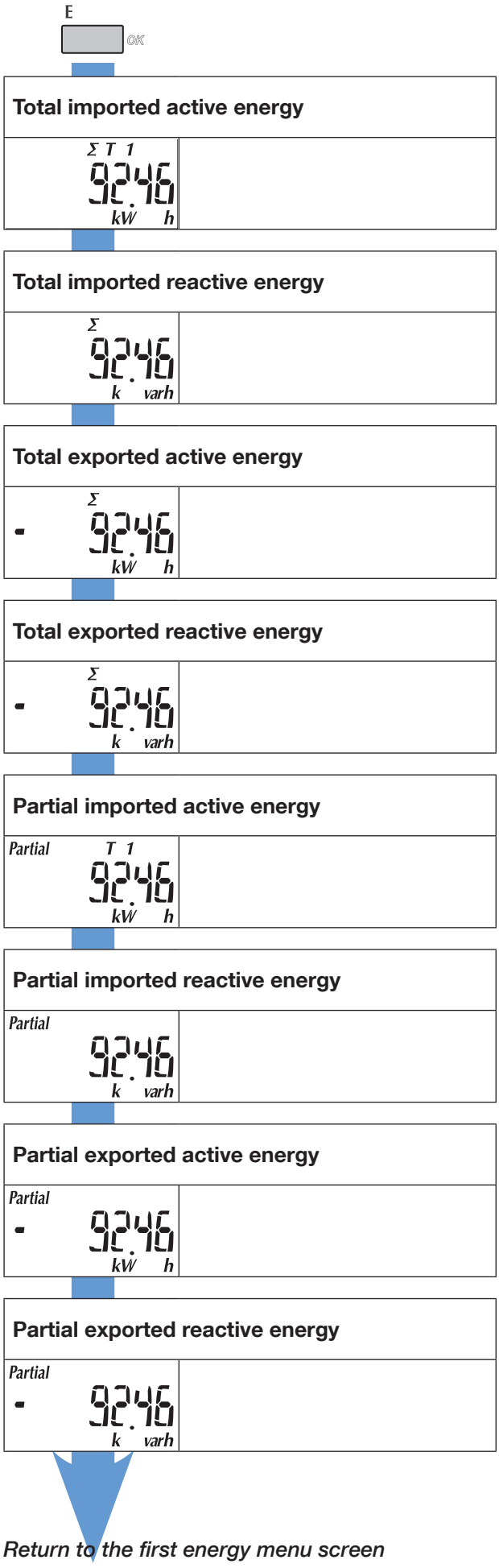

Return to the first energy menu screen

10.2. Detailed view of the measurement menu

M

Instantaneous phase currents

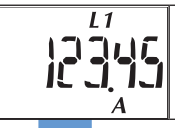

(L1, L2, L3, LN)

Max. phase currents

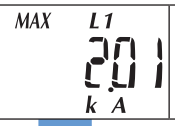

(L1, L2, L3, LN)

***Instantaneous phase-phase* voltages**

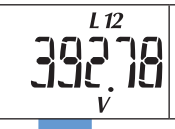

(L1-2, L2-3, L1-3,)

***Instantaneous phase-neutral*voltages**

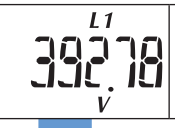

(L1, L2, L3)

Instantaneous three-phase active power

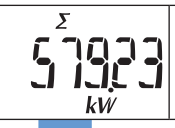

Instantaneous three-phase reactive power



Instantaneous three-phase apparent power



Max. three-phase active power

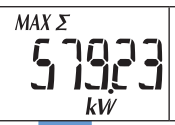

Max. three-phase reactive power



Max. three-phase apparent power

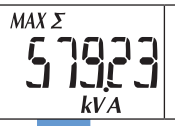

Min. three-phase active power

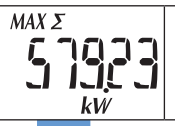

Min. three-phase reactive power



Instantaneous three-phase **cos**φ

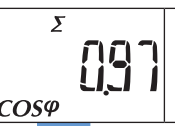

Max. three-phase **cos**φ



Min. three-phase **cos**φ



Return to the first measuring menu screen

11. CONNECTION TEST FUNCTION

During the test the DIRIS must have current and voltage on each of the phases.
In addition, this function considers that the power factor (PF) of the installation is between 0.6 < PF < 1. If the installation PF is not within this range this function cannot be used.

Starting the test

Press "E" for 3 seconds. The error message appears on the screen. If there is more than one error, they are displayed one after the other.

The messages below indicate the connection status of the phases on the DIRIS A14.

Message list	Networks involved
Err 0 = no errors	4NBL / 3NBL / 4BL / 3BL / 2BL / 1BL
Err 1 = CT connection inverted on phase 1	4NBL / 3NBL / 4BL / 3BL / 2BL / 1BL
Err 2 = CT connection inverted on phase 2	4NBL / 3NBL
Err 3 = CT connection inverted on phase 3	4NBL / 3NBL
Err 4 = I1 and I2 current inputs inverted	4NBL / 3NBL
Err 5 = I2 and I3 current inputs inverted	4NBL / 3NBL
Err 6 = I3 and I1 current inputs inverted	4NBL / 3NBL
Err 7 = voltage between V1 and V2 inverted	4NBL / 3NBL / 4BL / 3BL
Err 8 = voltage between V2 and V3 inverted	4NBL / 3NBL / 4BL / 3BL
Err 9 = voltage between V3 and V1 inverted	4NBL / 3NBL / 4BL / 3BL
Err 10 = voltage between V1 and N inverted	4NBL / 4BL
Err 11 = voltage between V2 and N inverted	4NBL / 4BL
Err 12 = voltage between V3 and N inverted	4NBL / 4BL
Err 13 = all V inputs are wrong	4NBL / 3NBL
Err 14 = all I inputs are wrong	4NBL / 3NBL
Err 15 = not enough current and/or voltage	4NBL / 3NBL / 4BL / 3BL / 2BL / 1BL

Connection errors must be corrected manually either by inverting the CT connections or by modifying the current or voltage connections including the neutral ones.

Exiting the test

Press "E" for 3 seconds.

Example: CT connection inverted on 3 phases (4NBL network)

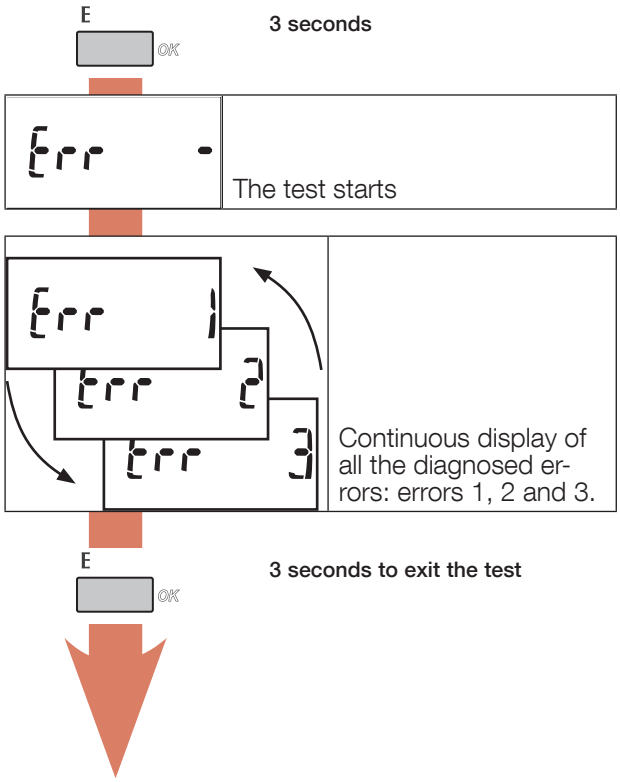

12. ASSISTANCE

Causes	Solutions
Device not working	Check the wiring of the plugs
Defective modbus communication	Check the RS485 modbus configuration: address, speed, parity, stop bit and recommended wiring (see "11. Connection test function", page 22)
"CRC Err" message displayed	The software has been corrupted. Please replace the device. Ensure that it is being used in compliance with the MID.
Voltages displayed = 0 V or incorrect	Check the connection. Start the connection test function (see "11. Connection test function", page 22).
Currents displayed = 0 A or incorrect	Check the connection. Start the connection test function (see "11. Connection test function", page 22).
Power levels and power factors (Cosφ) incorrect	Check the connection. Start the connection test function (see "11. Connection test function", page 22).

13. FEATURES

GENERAL FEATURES	
Compliant with	European EMC Directive no. 2004/108/EC (15/12/2004) LV Directive no. 2006/95/EC Dated 12/12/2006 Measuring Instrument Directive MID 2004/22/EC EN50470-1/-3 (02/2007) CEI 61557-12 (08/2007) CEI 62053-23 (01/2003)
Networks	Single-phase 2 wires 230V (1BL) / Two-phase 2 wires 400V (2BL) Three-phase 4 wires 3x230/400 V (4NBL) and three-phase 3 wires 3x230 V / 3x400 V (3NBL)(1)
Management	Connection test
Frequency	50 and 60 Hz (± 1 Hz)
Power supply	Self-supplied
MEASURING CURRENTS (TRMS)	
Via CT with primary	up to 2500A
Via CT with secondary	5A
Measuring range on the secondary	5mA - 6A
Input consumption	< 0.2VA per phase
Measurement refresh period	1s
Accuracy	0.2%
Permanent secondary overload	6A
Temporary overload on the secondary	120A for 0.5s
MEASURING VOLTAGES (TRMS)	
Direct measurement between phases	50 - 460VAC
Direct measurement between phase and neutral	28 - 265VAC
Input consumption	2VA
Measurement refresh period	1s
Accuracy	0.2%
Permanent overload	480VAC
POWER LEVEL MEASUREMENTS	
Measurement range	10 W/VA/var - 2 MW/MVA/Mvar
Active power accuracy	0.5%
Reactive power accuracy	2%
Apparent power accuracy	1%
Measurement refresh period	1s
COSφPOWER FACTOR MEASUREMENT	
Measurement range	±0.01 - ±1
Accuracy	1%
Measurement refresh period	1s
ENERGY MEASUREMENT	
Active	Yes
Reactive	Yes
Total and partial reading	Yes (0.01 - 99999.99 kWh / MWh / kvarh / Mvarh)
Bi-directional reading (Ea+, Ea- et Er+, Er-)	Yes

Resolution	10 Wh, 10 varh
ENERGY ACCURACY	
Ea+, Ea- active energy	Class C (EN 50470-3)
Er+, Er- reactive energy	Class 2 (CEI 62053-23)
TARIFF for Ea+(2)	
Tariff management	Yes
Number of tariffs managed	4
Tariff input	No
METROLOGICAL LED (Ea+, Ea-)	
Pulse value	10000 pulses / kWh
Colour	Red
DISPLAY	
Type	7 digit LCD with blue backlight
Refresh time	1 s
Backlight activation time	30 s
COMMUNICATION	
RS485	2 wires + shielding/ half duplex
Protocol	Modbus, RTU mode
Speed	4800 / 9600 / 19200 / 38400 Baud
Galvanic isolation	4 kV 1 min 50Hz
SAVING	
Energy registers	In the EEPROM memory
Clock	Battery operated
Load curve(2)	In FRAM memory
ENVIRONMENTAL CONDITIONS	
Mechanical environment	M1
Electromagnetic environment	E2
Operating temperature	- 10 °C to + 55 °C
Storage temperature	- 20 °C to + 70 °C
Humidity	95% RH non-condensing
Installation	inside a box
HOUSING	
Dimensions	Modular - width of 4 modules (DIN 43880)
L x H x D (mm)	72 x 90 x 64
Fitting	On DIN rail (EN 60715)
Connection capacity	Flexible: 1 - 6 mm^2 / Rigid: 1.5 - 10 mm^2
Nominal tightening torque	1.5 Nm
Protection index	Front: IP51 - casing: IP20
Insulation class	Class II (EN 50470-1)
Weight	240 g
OPTIONAL EXTRA	
Housing kit for door mounting (opening 92x92mm)	Kit 4825 0070

(1) Voltages must be balanced in a 3NBL network.

(2) Functions only available via the communication system. The full list of these functions is set out in the modbus communication table which can be downloaded from the website at www.socomec.com.

14. PERFORMANCE CLASSES

The performance classes are drawn up in compliance with CEI 61557-12 Edition 1 (08/2007)

PMD classification	SD
Temperature	K55

14.1. Feature specifications

Symbol	Function	PMD performance class in compliance with CEI 61557-12	Measurement range (In = 5 A)
Pa	Total active power	0.5	1% … 120% In
Q_V	Total reactive power (vector)	2	2% … 120% In
S_V	Total apparent power (vector)	1	2% … 120% In
Ea +/-	Total imported/ exported active energy	0.5	1% … 120% In
Er_A +/-	Total imported/ exported reactive energy (vector)	2	2% … 120% In
f*	Frequency	0.1	45 … 65 Hz
I	Phase current	0.2	10% … 120% In
INc	Calculated neutral current	0.5	10% … 120% In
U	Voltage (Lp-Lg or Lp-N)	0.2	50 … 265 VAC Ph/N
PF_V*	Power factor (vector)	0.5	0.5 inductive to 0.8 capacitive
THDu*	Total harmonic voltage distortion rate (compared with the fundamental rate)	1	Fn=50Hz - rows 1 - 63 Fn=60Hz - rows 1 - 52
THDi*	Total harmonic current distortion rate (compared with the fundamental rate)	1	Fn=50Hz - rows 1 - 63 Fn=60Hz - rows 1 - 52

* functions only available via modbus communication.

15. LIST OF ABBREVIATIONS

nEt	Type of network
4NBL	Unbalanced three-phase network, 4 wires with 3 CTs
4NBL	Balanced three-phase network, 4 wires with 1 CT
3NBL	Unbalanced three-phase network, 3 wires with 2 or 3 CTs
3NBL	Balanced three-phase network, 3 wires with 1 CT
2NBL	Balanced two-phase network, 2 wires with 1 CT
3NBL	Balanced single-phase network, 1 wire with 1 CT
CT	Current transformer
MAX I	Maximum average values of phase currents
rST	Reset
MAX P, Q and S	Maximum value of average active, reactive and apparent powers
EA +/-	Imported/ exported active energy (kWh)
ER +/-	Imported/ exported reactive energy (kvarh)
THD I1, I2, I3	Harmonic current distortion rate
THD U12, U23, U31	Harmonic composed voltage distortion rate
THD V1, V2, V3	Harmonic phase-to-neutral voltage distortion rate
COM	Communication
Add	Slave address
bd	Communication speed in bauds (bits per second)
PAr	Communication frame parity
NO	No parity
Even	Even parity
Odd	Odd parity
Stop	Frame stop bit
1	1 stop bit
2	2 stop bits

542 957 A - EN - 11/14

socomec
Innovative Power Solutions

Non-contractual document. © 2014, SOCOMEC SA. All rights reserved