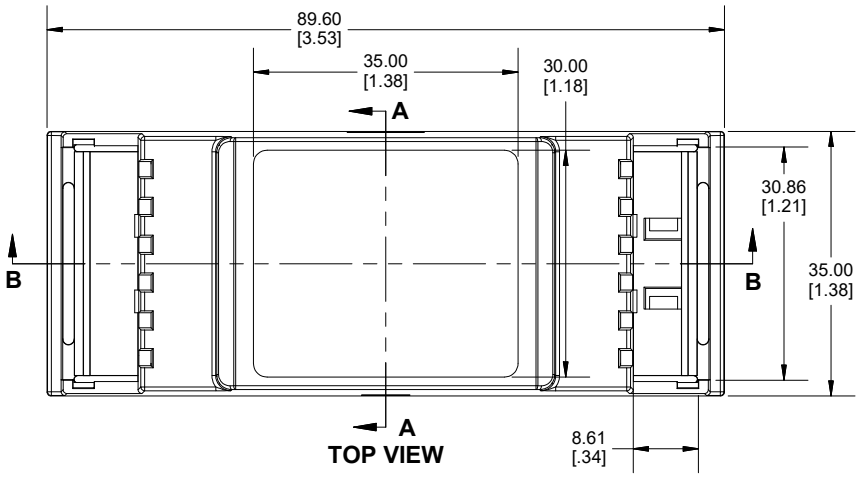

TOP VIEW

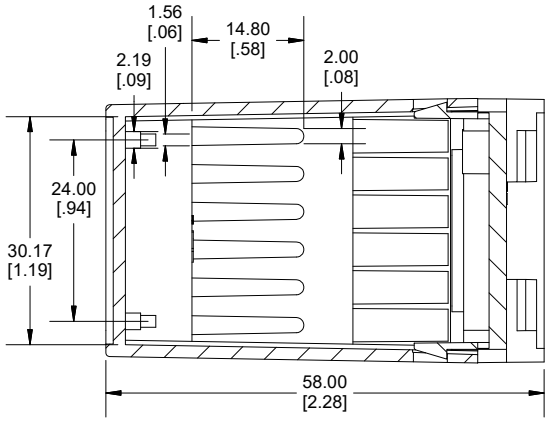

SECTION A-A

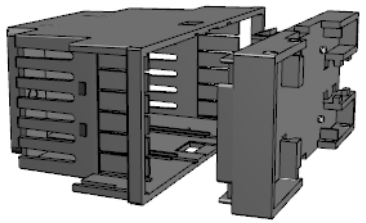

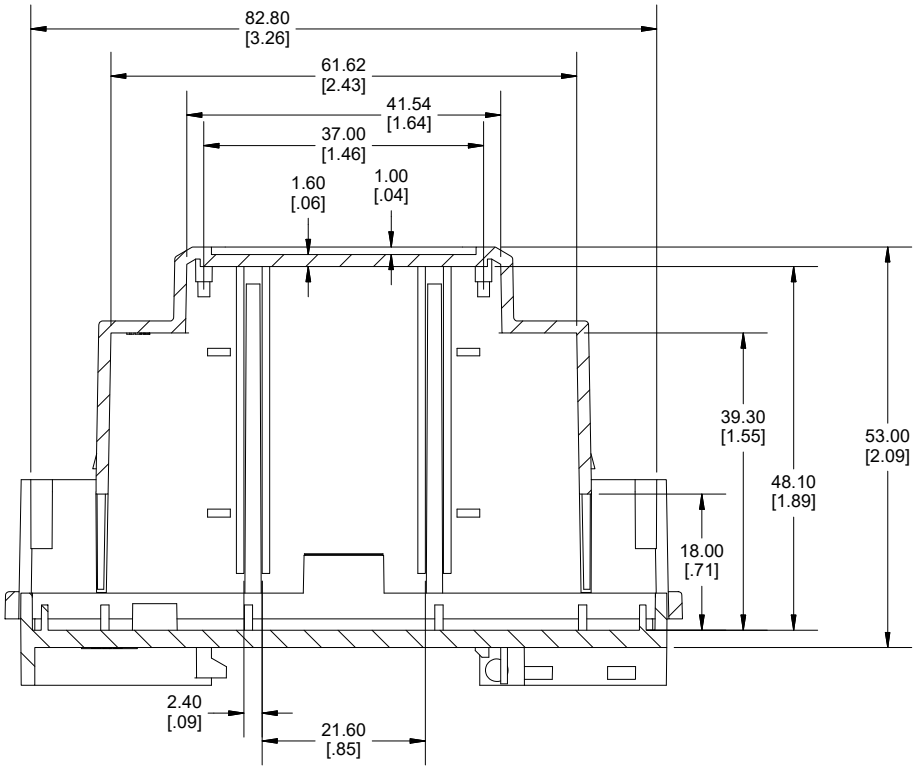

SECTION B-B

Enclosures can be Factory Modified (Milling, Drilling, Printing etc.)
Contact Factory (modshop@hammfg.com) for quotes
Solid models of this enclosure available in .stp or .x_t
(Part number and text placement/orientation on our products are subject to change, we do not recommend using them as a locating reference for modification purposes)

NOTE
Purchased enclosure includes base and cover.
Cover is made from polycarbonate, Base is made from PPE+PS.

PART NUMBERS	
1597DIN	
2 Module enclosure grey	1597DIN2GY
ACCESSORIES	
Cover panel closed (Pkg 1)	1597DINCOV1GY
Cover panel oval (Pkg 1)	1597DINCOV2GY
Cover panel vented (Pkg 1)	1597DINCOV3GY
Cover panel knockout (Pkg 1)	1597DINCOV4GY

Dimensions:
mm
[inches]

HAMMOND MANUFACTURING®

1597DIN2

www.hammondmfg.com

REV: 19.09.2019