Technical datasheet



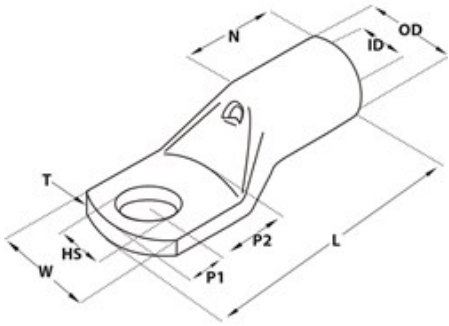

25-8

E0845048

CABLE LUG KRF 25mm2, M8

Product Properties:

Suitable for Class 5 conductor	Yes
Suitable for Class 6 conductor	Yes
Insulated	No
Max. current (Imax)	124 A
Number of mounting holes	1 .
Flange shape	Ring shape
Colour insulation	Other
Slender flange model	No
With sight-hole	Yes
Conductor category	Several
Max Temp	150 °C
Surface protection	Tinned
Material	Copper
Connecting angle	180° (horizontal)
Series	KRF/KSF (10-500mm2)

Dimensions:

HS	8.5 mm
ID	8 mm
OD	11 mm
T	2.8 mm
P1	8 mm

P2	9 mm
L	38 mm
N	14 mm
W	16 mm
MOQ	100 .
Unit	pcs
Bolt dimension (metric)	8 .
Nominal cross section	25 mm²

Approvals:

Approved according to CE	Yes
Approved according to DNV	Yes

Compliance:

CA Proposition 65	In compliance
Conflict Minerals	Yes, see report under tab "Documents"
Extended Minerals	N/A, contains no extended minerals
Iron and Steel Sanction	Compliance
PFAS	No PFAS
REACH	No SVHC (Latest. 21 Jan 2025)
RoHS	RoHS 3 (2015/863)
SCIP	Not Applicable
US TSCA	No (5 PBT Subs, Feb 2021)
ECCN (EU)	No CLASS
ECCN (US)	EAR99

Other information:

ETIM-Class	EC001051 - Tube cable lug for copper conductors
ETIM-Release	9.0
Trademark	NEMIQ
Product Group	Cable lugs
Alternative SKU	25-8
E-no	E0845048

Logistic information:

Barcode	733117612045
Country of origin	SE
E-no	E0845048
Item status	Stock item, normally in stock with reservation for in between sales.
MOQ	100 .
Stock code	25-8
Taric code	85369010

Unit	pcs

*We reserve the right to make technical changes and disclaim any typographical errors.