PT5304

Pressure transmitter

PT-010-SEG14-A-ZVG/US/ /W

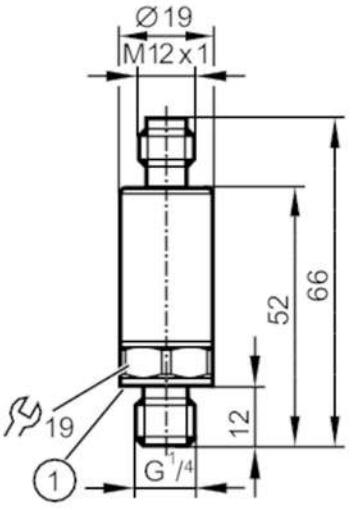

1 Sealing

Product characteristics				
Number of inputs and outputs		Number of analogue outputs: 1		
Measuring range		0...10 bar	0...145 psi	0...1000 kPa	0...1 MPa
Process connection		threaded connection G 1/4 external thread (DIN EN ISO 1179-2)		
Application				
Application		for industrial applications		
Media		liquids and gases		
Medium temperature	[°C]	-40...90		
Min. bursting pressure		300 bar	4350 psi	30 MPa
Pressure rating		25 bar	360 psi	2.5 MPa
Note on pressure rating		static		
Vacuum resistance		-1000 mbar	-0.1 MPa	
Type of pressure		relative pressure		
Electrical data				
Operating voltage	[V]	8.5...36 DC		
Min. insulation resistance	[MΩ]	100; (500 V DC)		
Protection class		III		
Reverse polarity protection		yes		
Power-on delay time	[s]	< 0.1		
Inputs / outputs				
Number of inputs and outputs		Number of analogue outputs: 1		
Outputs				
Total number of outputs		1		
Output signal		analogue signal		
Number of analogue outputs		1		
Analogue current output	[mA]	4...20		
Max. load	[Ω]	(Ub – 8,5 V) / 21,5 mA; @8,5V= 0 Ω; @12V max. 160 Ω; @24V max. 720 Ω		
Short-circuit proof		yes		

PT5304

Pressure transmitter

PT-010-SEG14-A-ZVG/US/ /W

Overload protection	yes			
Measuring/setting range				
Measuring range	0...10 bar	0...145 psi	0...1000 kPa	0...1 MPa
Accuracy / deviations				
Repeatability [% of the span]	< ± 0,05; (with temperature fluctuations < 10 K)			
Characteristics deviation [% of the span]	< ± 0,5; (incl. drift when overtightened, zero point and span error, non-linearity, hysteresis)			
Linearity deviation [% of the span]	< ± 0,1 (BFSL) / < ± 0,2 (LS)			
Hysteresis deviation [% of the span]	< ± 0,2			
Long-term stability [% of the span]	< ± 0,1; (per 6 months)			
Temperature coefficient zero point and span [% of the span / 10 K]	< 0,1 (-25...90 °C) / < 0,2 (-40...-25 °C)			
Response times				
Step response time analogue output [ms]	1			
Operating conditions				
Ambient temperature [°C]	-40...90			
Storage temperature [°C]	-40...100			
Protection	IP 67; IP 69K			
Tests / approvals				
EMC	DIN EN 61000-6-2			
	DIN EN 61000-6-3			
Shock resistance	DIN EN 60068-2-27	50 g (11 ms)		
Vibration resistance	DIN EN 60068-2-6	20 g (10...2000 Hz)		
MTTF [years]	787			
UL approval	UL Approval no.	J029		
Pressure Equipment Directive	Sound engineering practice; can be used for group 2 fluids; group 1 fluids on request			
Mechanical data				
Weight [g]	58.5			
Housing	cylindrical			
Dimensions [mm]	Ø 19 / L = 66			
Materials	stainless steel (630/1.4542/17-4 PH); stainless steel (316L/1.4404); PEI			
Materials (wetted parts)	stainless steel (630/1.4542/17-4 PH)			
Min. pressure cycles	60 million; (at 1.2 times nominal pressure)			
Tightening torque [Nm]	25...35; (recommended tightening torque; depends on lubrication, seal and pressure rating)			
Process connection	threaded connection G 1/4 external thread (DIN EN ISO 1179-2)			
Process connection sealing	FKM (DIN EN ISO 1179-2)			
Restrictor element integrated	no (can be retrofitted)			
Remarks				
Remarks	BFSL = Best Fit Straight Line LS = limit value setting			

PT5304

Pressure transmitter

PT-010-SEG14-A-ZVG/US/ /W

Pack quantity	1 pcs.

Electrical connection

Connector: 1 x M12; coding: A

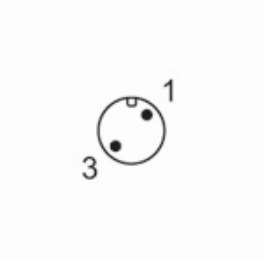

Connection

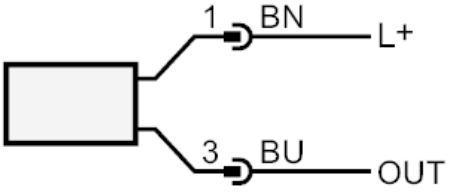

OUT	analogue output
	colours to DIN EN 60947-5-2
	Core colours :
BN =	brown
BU =	blue