E12481

Y-splitter

ZDO2H050MSS0000-00STGH050MSS

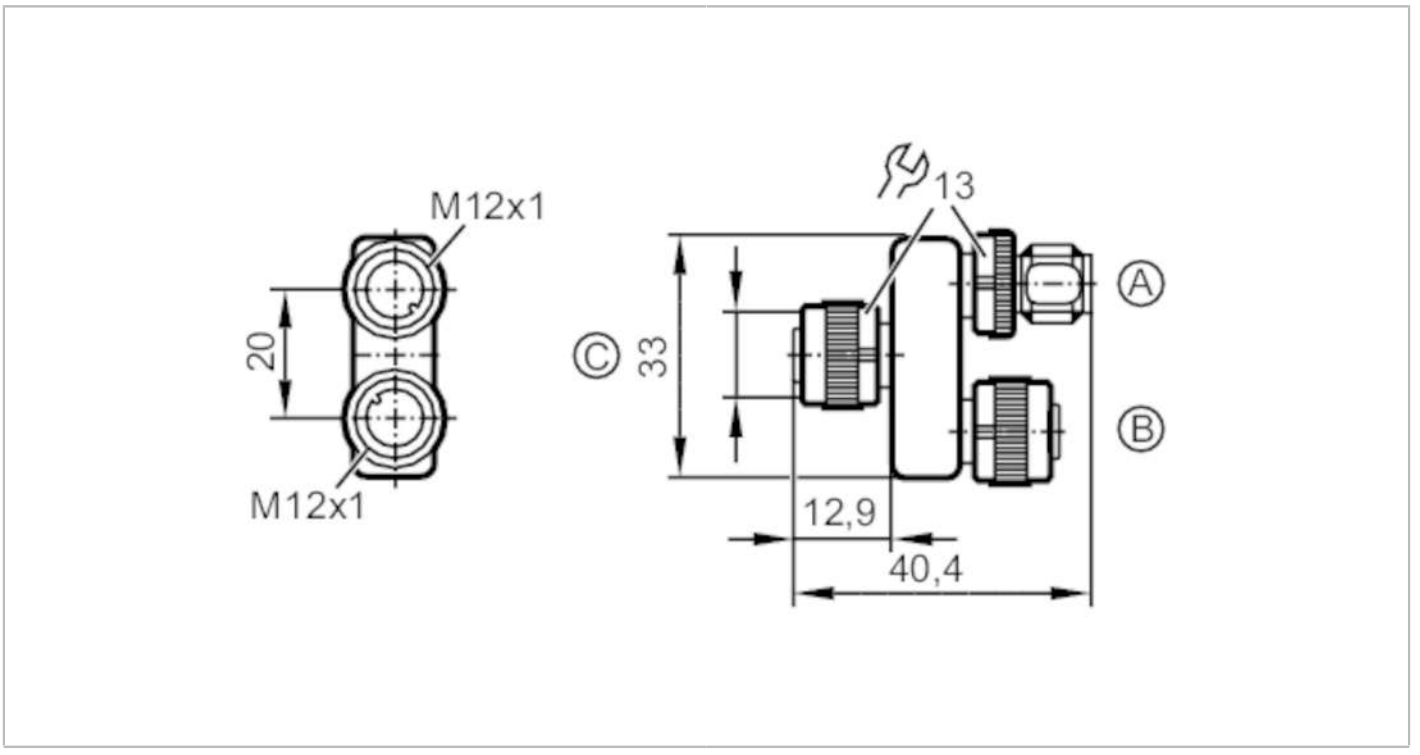

Application		
Special feature		Free from silicone; Gold-plated contacts
Free from silicone		yes
Electrical data		
Operating voltage	[V]	< 60 DC
Max. current load per module/slot	[A]	4
Max. current load total	[A]	4
Operating conditions		
Ambient temperature	[°C]	-25...85
Protection		IP 67
Mechanical data		
Weight	[g]	23.9
Materials		PUR
Moulded-body material		PUR
Material nut		diecast zinc
Connector type		M12
Remarks		
Pack quantity		1 pcs.

E12481

Y-splitter

ZDO2H050MSS0000-00STGH050MSS

Electrical connection - plug

Connector: 1 x M12; coding: A; Moulded body: PUR; Locking: diecast zinc; Contacts: gold-plated

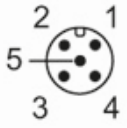

Connection

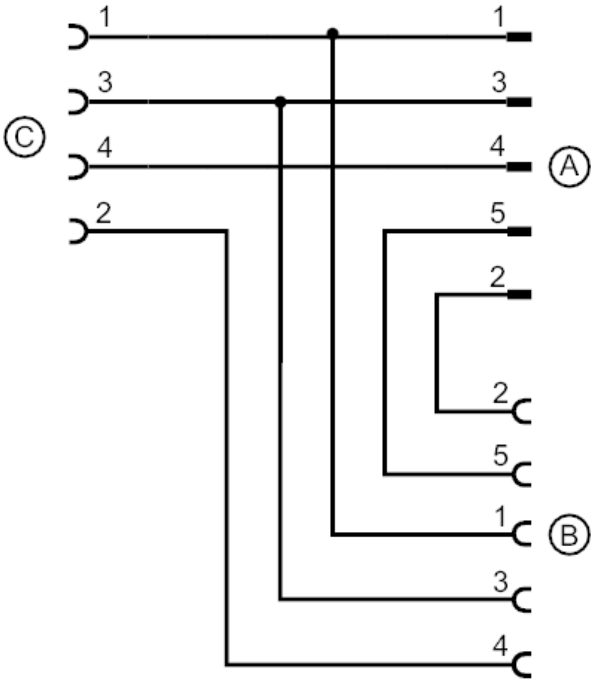

Electrical connection - socket

Connector: 2 x M12; coding: A; Moulded body: PUR; Locking: diecast zinc; Contacts: gold-plated

