26230, 80107 NAMUR 3/2 & 5/2
Indirect solenoid actuated spool valves

- Port size: G1/4 and NAMUR interface
- For single and double operated actuators
- Standard manual override with detent
- Simple design of soft spool seal system
- Compact design, high flow rate
- Easily interchangeable solenoid system
- Maintenance-free
- Valves and solenoids are ATEX approved (see table)



Technical features

Medium:
Compressed air, filtered, lubricated or non-lubricated

Operation:
Solenoid, indirectly controlled

Operating pressure:
2 ... 8 bar (29 ... 116 psi)

Orifize:
6 mm

Port size:
G 1/4
NAMUR Interface with integrated exhaust air

Mounting position:
Optional, preferably with solenoid on top

Flow direction:
Fixed

Electrical connection:
See solenoid table

Ambient/Media temperature:
-10° ... +50°C (+14° ... +122°F)
Solenoid: see solenoid table
Air supply must be dry enough to avoid ice formation at temperatures below 2°C (+35°F).

Materials:
Housing: Aluminium
Pilot flange: Plastic
Seat seal: NBR

Technical data

Symbol	Ports *2 1, 3 (5)	2 (4)	Actuation	Nominal size	Operating pressure (bar)	kv-value (Cv (US) ≈ kv x 1,2)	Weight (kg)	Dimension No.	Model *1)
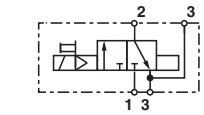	G 1/4	Flange	Solenoid indirectly controlled	6	2 ... 8	1,2	0,4	1	8010777
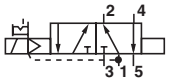	G 1/4	Flange	Solenoid indirectly controlled	6	2 ... 8	1,2	0,55	2	2623077
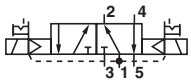	G 1/4	Flange	Solenoid indirectly controlled	6	2 ... 8	1,2	0,9	3	2623177

3/2 or 5/2 way function (conversion instruction see page 6)

Symbol	Ports *2 1, 3 (5)	2 (4)	Actuation	Nominal size	Operating pressure (bar)	kv-value (Cv (US) ≈ kv x 1,2)	Weight (kg)	Dimension No.	Model *1)
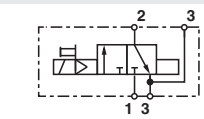	G 1/4	Flange	Solenoid indirectly controlled	6	2 ... 8	1,2	0,4	4	2623079
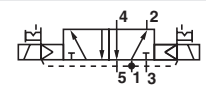	G 1/4	Flange	Solenoid indirectly controlled	6	2 ... 8	1,2	0,9	5	2623179

*1) When ordering please indicate solenoid, voltage and current type (frequency).
*2) Port 5 is not throttleable

Our policy is one of continued research and development. We therefore reserve the right to amend, without notice, the specifications given in this document. (2004 - 5119f) © 2024 Norgren Ltd.

Solenoid actuators

	Power consumption 24 V d.c. (W)	230 V a.c. (VA)	Rated current 24 V d.c. (m A)	230 V a.c. (m A)	Protection class IP/NEMA	Ex-Protection (ATEX-Category)	Temperature Ambient/Media (°C)	Electrical connection	Weight (kg)	Drawing No.	Circuit diagram No.	Model
	1,8	–	70	–	IP65 (with connector)	–	-15 ... +50	Connector DIN EN 175301-803, form B *1)	0,1	11	1	3050
	1,6	–	30	–	IP65 (with connector)	–	-15 ... +50	Connector DIN EN 175301-803, form A *1)	0,1	12	1	3036
	2,7	–	115	–	IP65 (with connector)	II 2 G Ex mb IIC T5 Gb II 2 D Ex mb tb T95°C Db	-20 ... +50 *2)	Cable length 3 m	0,3	13	14	3062
	–	2,1	–	9	IP65 (with connector)	II 2 G Ex mb IIC T5 Gb II 2 D Ex mb tb T95°C Db	-20 ... +50 *2)	Cable length 3 m	0,3	13	15	3063
	2,7	–	115	–	IP66 (with connector)	–	-10 ... +50	Connector *1) M12x1, DIN IEC 61076-2-101 Solenoid with yellow LED	0,1	14	17	3071

Standard voltages (±10%) 24 V d.c., 230 V a.c., other voltages on request.
*1) Connector is not scope of delivery, see table »Accessories«

Approvals

Model	Approvals ATEX	IECEx	FM		Datasheet
306x	PTB 03 ATEX 2015		–	–	N/en 7.1.560

Accessories

Connector Form A	M12 x 1		Silencer	Flange plate	Yoke
					
			Page 7	Page 7	Page 7
0570275 (form A)	0523055 (without cable)	0523056 (90°, without cable)	M/S2 G1/4	0612790 (NAMUR single connection plate)	0540593
0680003 (form B)	0523057 (2 m cable)	0523058 (90°, 2 m cable length)		0612791 (NAMUR-rip use in combination with 0612790, Alu)	
	0523052 (5 m cable)	0523053 (90°, 5 m cable length)			

Our policy is one of continued research and development. We therefore reserve the right to amend, without notice, the specifications given in this document. (2004 - 5119f) © 2024 Norgren Ltd.

Dimensions
Valves

Dimensions in mm
Projection/First angle

1

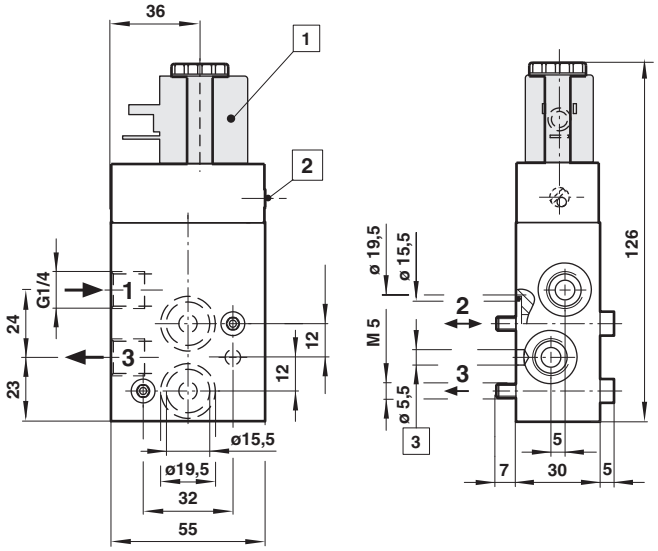

2

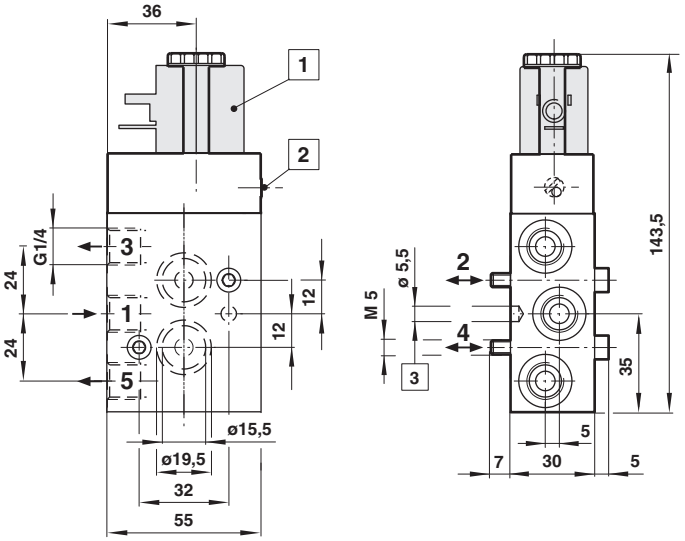

3

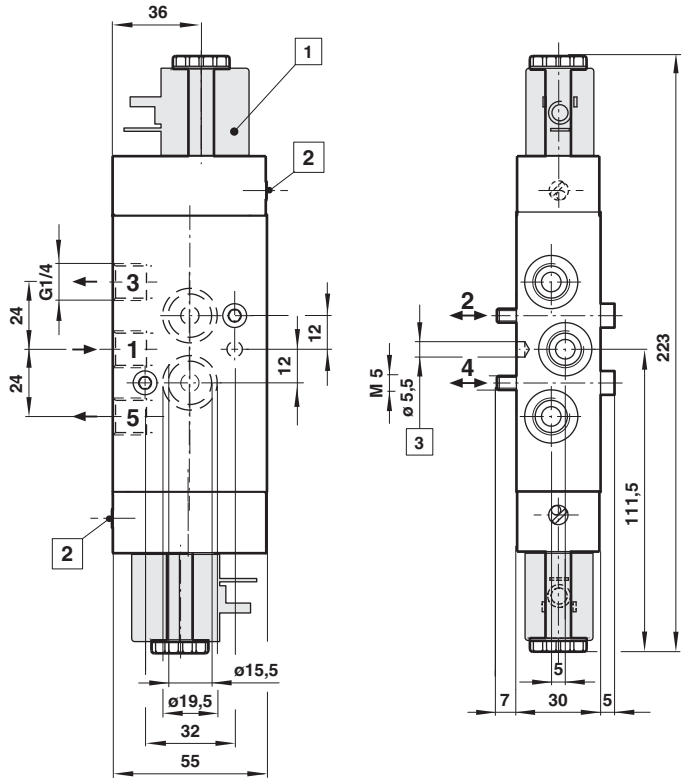

1 Solenoid 90° turnable
2 Manual override with detent
3 NAMUR centering hole

Our policy is one of continued research and development. We therefore reserve the right to amend, without notice, the specifications given in this document. (2004 - 5119f) © 2024 Norgren Ltd.

Dimensions in mm
Projection/First angle

4

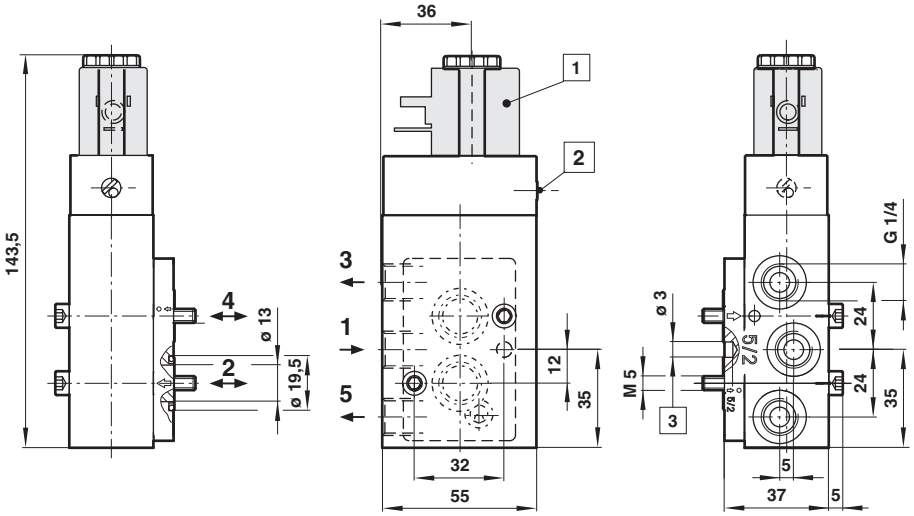

5

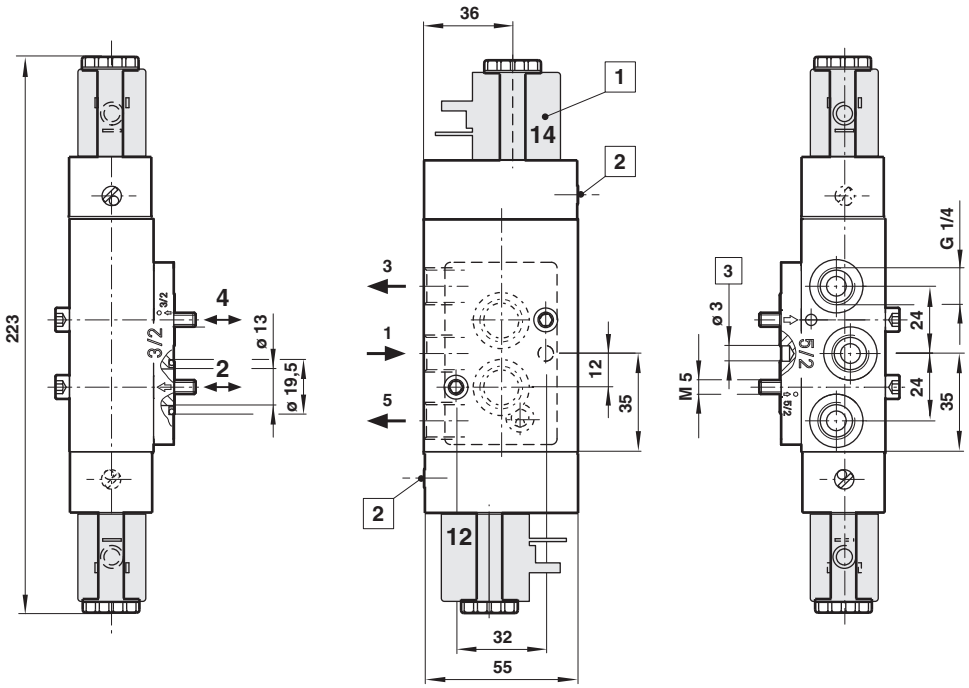

1 Solenoid 90° turnable
2 Manual override with detent
3 NAMUR centering hole

Our policy is one of continued research and development. We therefore reserve the right to amend, without notice, the specifications given in this document. (2004 - 5119f) © 2024 Norgren Ltd.

Dimensions

Dimensions in mm
Projection/First angle

Solenoid operators

(11)

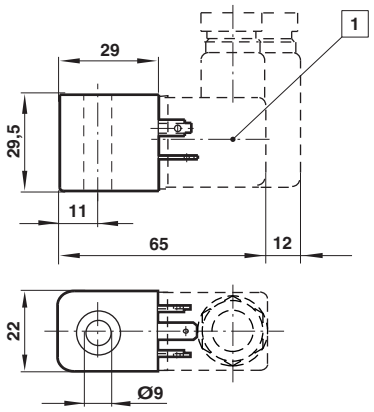

(12)

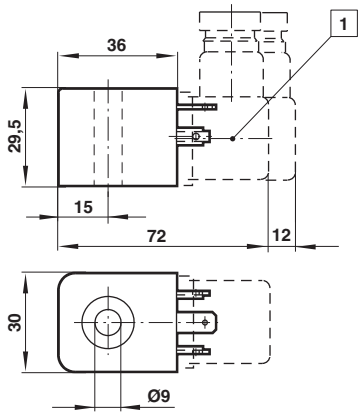

(13)

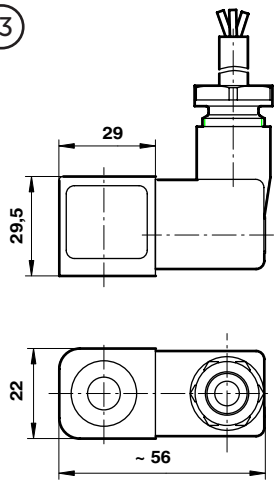

(14)

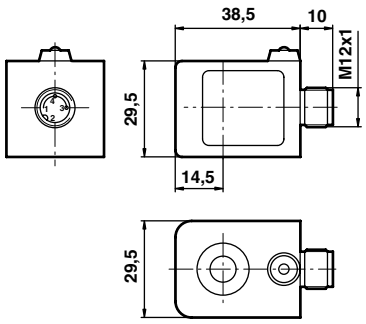

[1] Connector 4 x 90° turnable

Electrical connection M 12 x 1



Pin	Signal	Cable
1	+ UB	brown
2	Out 2 (PNP) / analogue 4 to 20 mA	white
3	0 Volt	blue
4	Out 1 (PNP)	black

Circuit diagrams

(1)

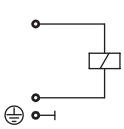

(14)

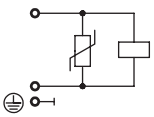

(15)

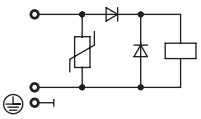

(17)

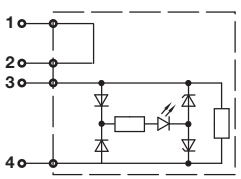

Our policy is one of continued research and development. We therefore reserve the right to amend, without notice, the specifications given in this document. (2004 - 5119f) © 2024 Norgren Ltd.

NAMUR hole pattern (actuator side)

Dimensions in mm
Projection/First angle

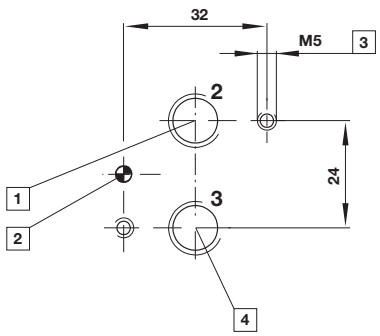

1 Coding stud threaded
2 10 mm deep

NAMUR quick exhaust module for a better kv-value by exhaust see data sheet 5.4.820

NAMUR interlinking plates in redundancy design for »safety exhausting« and »safety ventilating« see data sheet 5.4.830

Conversion instructions of 5/2 into 3/2 way function

5/2 way function (original mode of supply)

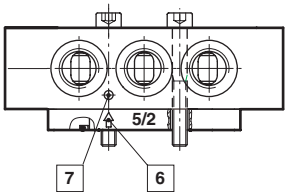

3/2 resp. 5/2 way function can be achieved just by swapping enclosed adaptor plates. Make sure Marker and Arrow do match as shown on above drawing. Original mode of supply: 5/2 function.

3/2 way function

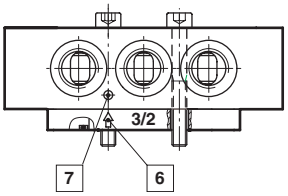

6 Arrow
7 Marker

Our policy is one of continued research and development. We therefore reserve the right to amend, without notice, the specifications given in this document. (2004 - 5119f) © 2024 Norgren Ltd.

Single connection plate
Model: 0612790

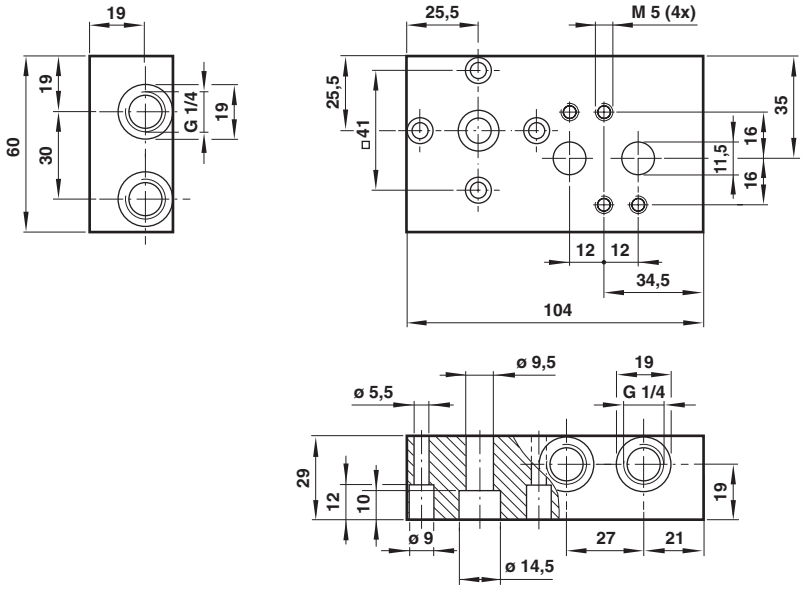

NAMUR slot
Model: 0612791

Dimensions in mm
Projection/First angle

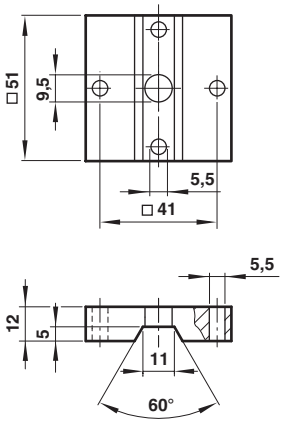

Yoke
Model: 0540593

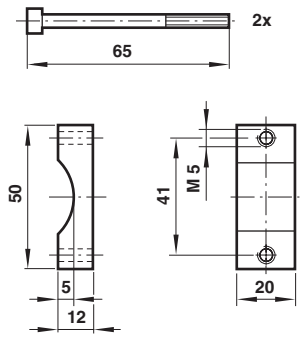

Silencer
Model: M/S2

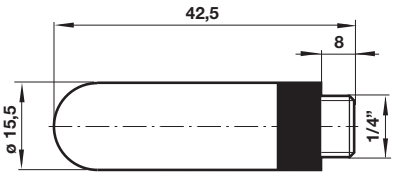

Warning

These products are intended for use in industrial compressed air systems only. Do not use these products where pressures and temperatures can exceed those listed under »Technical features/ data«.

Before using these products with fluids other than those specified, for non-industrial applications, life-support systems or other applications not within published specifications,
consult Norgren Ltd.
Through misuse, age, or malfunction, components used in fluid power systems can fail in various modes.

The system designer is warned to consider the failure modes of all component parts used in fluid power systems and to provide adequate safeguards to prevent personal injury or damage to equipment in the event of such failure.
System designers must provide a warning to end users in the system instructional manual if protection against a failure mode cannot be adequately provided.
System designers and end users are cautioned to review specific warnings found in instruction sheets packed and shipped with these products.

Our policy is one of continued research and development. We therefore reserve the right to amend, without notice, the specifications given in this document. (2004 - 5119f) © 2024 Norgren Ltd.