Pressure regulator, Series MU1-RGS

R412004371

General series information
AVENTICS Series MU1 Air Preparation Units

- The AVENTICS Series MU1 components are ideal for applications in harsh environments. They offer large thread connections to guarantee a high compressed air flow rate and provide reliable filtration, regulation and lubrication.



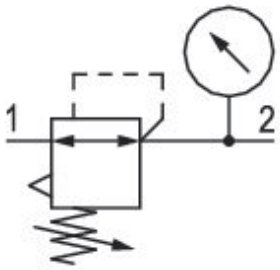

Technical data

Industry	Industrial
Function	Standard pressure regulator
Parts	Pressure regulator
Pressure gauge	with pressure gauge
Mounting orientation	Any
Regulator type	Diaphragm-type pressure regulator
Port	G 1/2
Nominal flow Qn	5000 l/min
Regulation range min.	0.5 bar
Regulation range max.	16 bar
Working pressure min.	0.5 bar
Working pressure max	30 bar

Min. ambient temperature	-10 °C
Max. ambient temperature	80 °C
Activation	Mechanical
Regulator function	with relieving air exhaust
Pressure supply	single
Medium	Compressed air Neutral gases
Weight	1.2 kg

Material

Housing material	Die cast zinc
Seal material	Acrylonitrile butadiene rubber
Part No.	R412004371

Technical information

The pressure dew point must be at least 15 °C less than ambient and medium temperature and may not exceed 3 °C.

Nominal flow Qn with secondary pressure p2 = 6 bar at Δp = 1 bar

Mounting: panel installation or mounting bracket R412004872

Dimensions

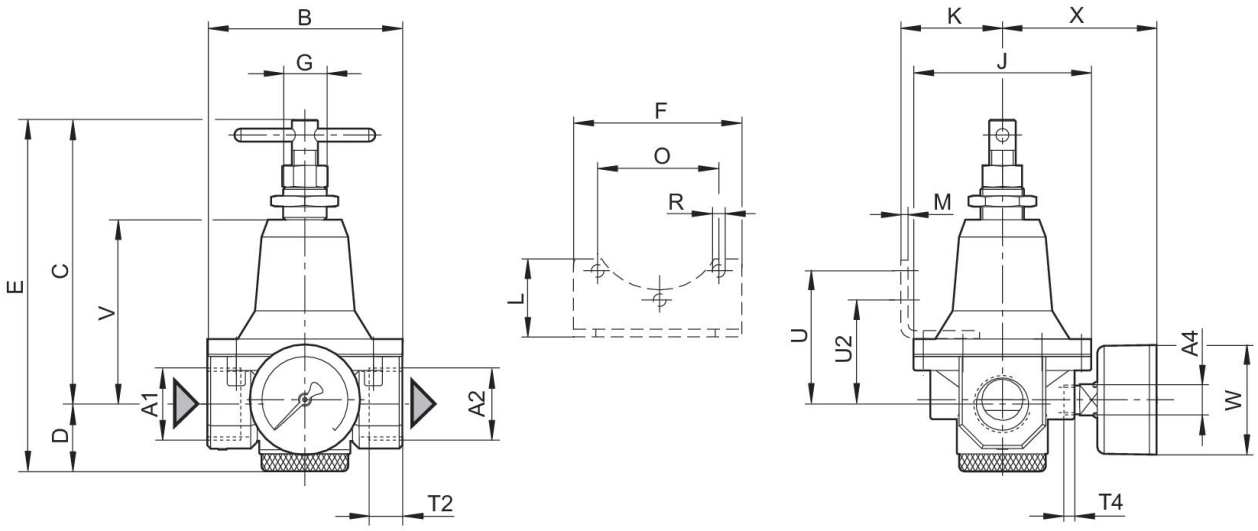

Part No.	A1	A2	A4	B	C	D	E	F	G
R412004371	G 1/2	G 1/2	G 1/4	82	129	31	162	124	M20x1,5
R412007578	G 1/2	G 1/2	G 1/4	82	129	31	162	124	M20x1,5
9153320160	G 1/2	G 1/2	G 1/4	82	129	31	162	124	M20x1,5

Part No.	J	K	L	M	O	R	U	U2	T2
R412004371	82	47	38	3	53.6	6	58	45	14
R412007578	82	47	38	3	53.6	6	58	45	14
9153320160	82	47	38	3	53.6	6	58	45	14

Part No.	T4	V	W	X
R412004371	7	83	63	72
R412007578	7	83	63	72
9153320160	7	83	63	72

Flow rate characteristic (secondary range p2: 0.5 - 10 bar)

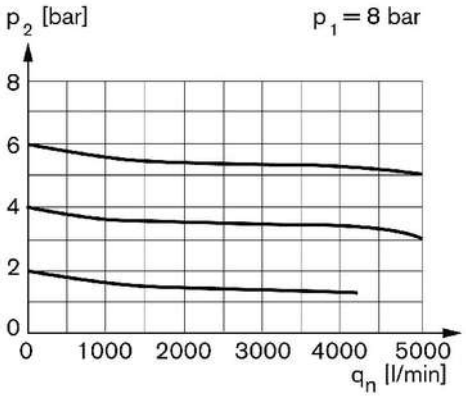

p1 = Working pressure
p2 = Secondary pressure
qn = Nominal flow

Pressure characteristics curve

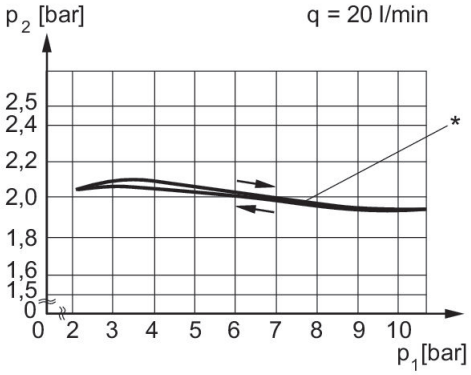

p1 = Working pressure
p2 = Secondary pressure
q = flow rate
* starting point