6x6 Through Hole
& Ground Terminal Type

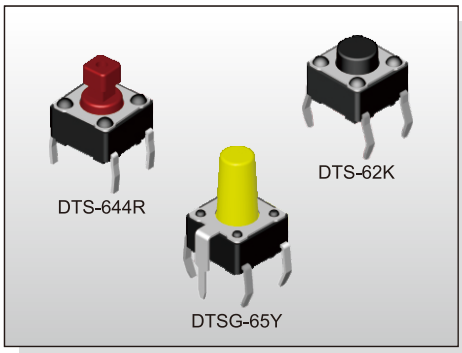

FEATURES

※Compact size 6x6mm
※Sharp tactile feeling
※Cap options

APPLICATION

※Audio, OA equipment
※Instrumentation
※Industrial

SPECIFICATION

Contact Rating	50mA, 12V DC
Contact Resistance	100mΩ max.
Insulation Resistance	100MΩ min. 500V DC
Dielectric Strength	250V AC/1 minute
Operating Force	70±30gf, Bule(U) 100±50gf, Black(K) 160±50gf, Brown(N) 260±50gf, Red(R) 320±80gf, Salmon(S) 520±130gf, Yellow(Y)
Travel	0.25mm
Operating Life	Phosphor Bronze Dome 50,000 cycles for 520/320gf 100,000 cycles for 260gf 200,000 cycles for 160/100/70gf Stainless Steel Dome 300,000 cycles for 520/320gf 500,000 cycles for 260gf 1,000,000 cycles for 160/100/70gf
Operating Temp.	-25°C ~ +70°C
Storage Temp.	-30°C ~ +80°C

HOW TO ORDER

D T S □ - 6 □ □ - □ - □ - □

- □=Without Ground Pin / G=With Ground Pin
- Height:
  - 1=4.30mm
  - 2=5.00mm
  - 3=7.00mm
  - 44=7.30mm (SQ.)x2.40mm
  - 48=7.30mm (SQ.)x2.80mm
  - 5=9.50mm
  - 6=13.00mm
  - 8=11.30mm
  - 9=19.50mm
- Operating Force:
  - U=Blue, 70gf
  - K=Black, 100gf
  - N=Brown, 160gf
  - R=Red, 260gf
  - S=Salmon, 320gf
  - Y=Yellow, 520gf
- □=Phosphor Bronze Dome / S=Stainless Steel Dome
- V=RoHS & Lead Free Solderable / Q=Halogen Free
- Package:
  - □=Bulk pack
  - ▲B=Tube
  - (▲DTS-61, 62 Only)

CIRCUIT

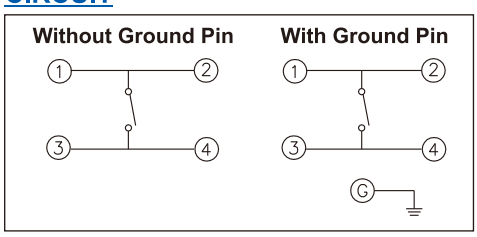

PACKAGE

<Bag>
1000 pcs
<Tub>
DTS-61/62: 75 pcs

DTS-6

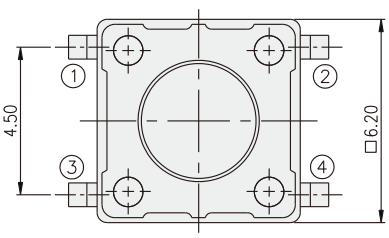

PART NO.	H
DTS-61	4.30
DTS-62	5.00
DTS-63	7.00
DTS-65	9.50
DTS-66	13.00
DTS-68	11.30
DTS-69	19.50

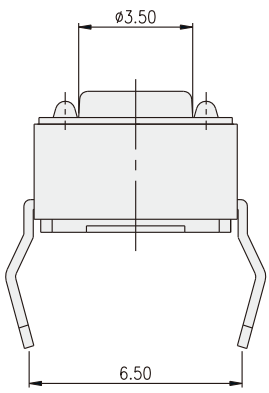

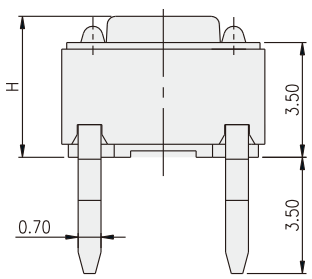

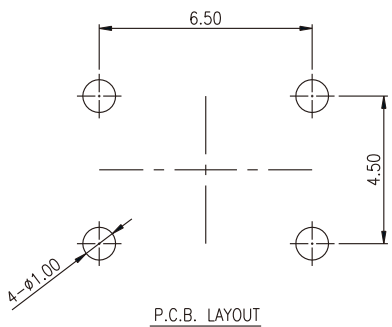

DTS-644(8)

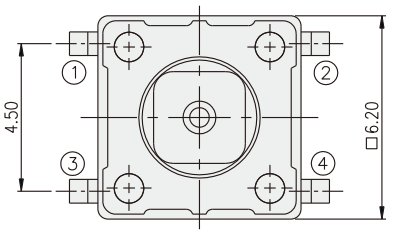

PART NO.	□A	□B
DTS-644	2.40	1.60
DTS-648	2.80	2.00

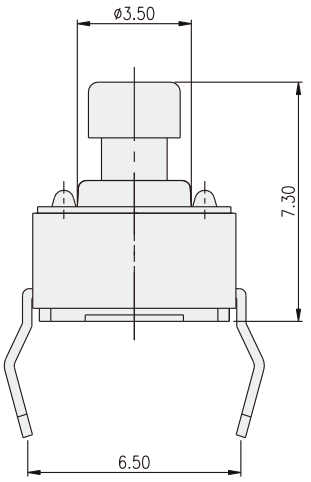

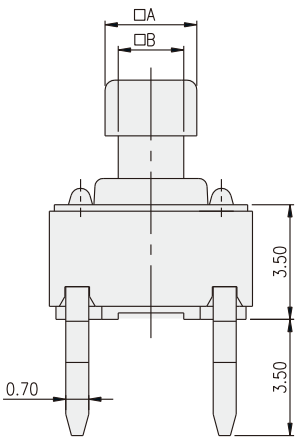

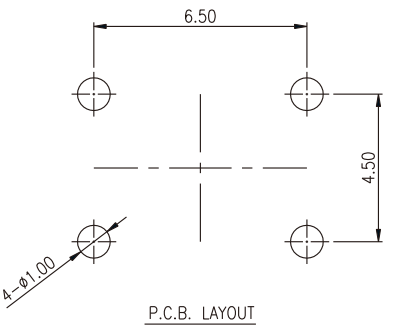

P.C.B. LAYOUT

DTSG-6

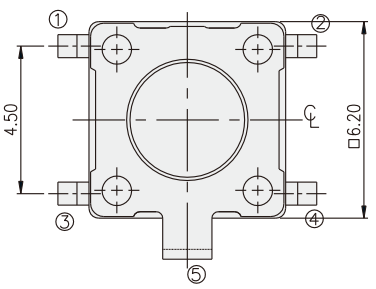

PART NO.	H
DTSG-61	4.30
DTSG-62	5.00
DTSG-63	7.00
DTSG-65	9.50
DTSG-66	13.00
DTSG-68	11.30
DTSG-69	19.50

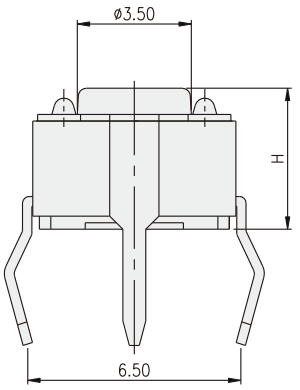

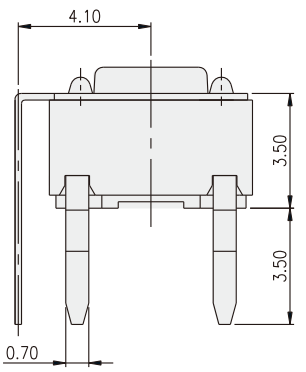

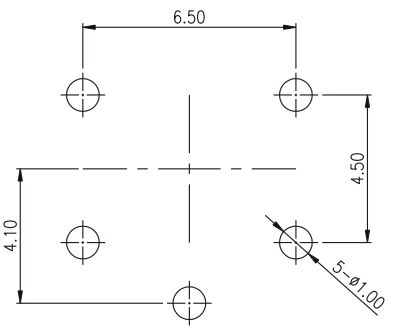

P.C.B. LAYOUT