IA5126

Inductive sensor

IA-3010-BPKG/US-104-KPS

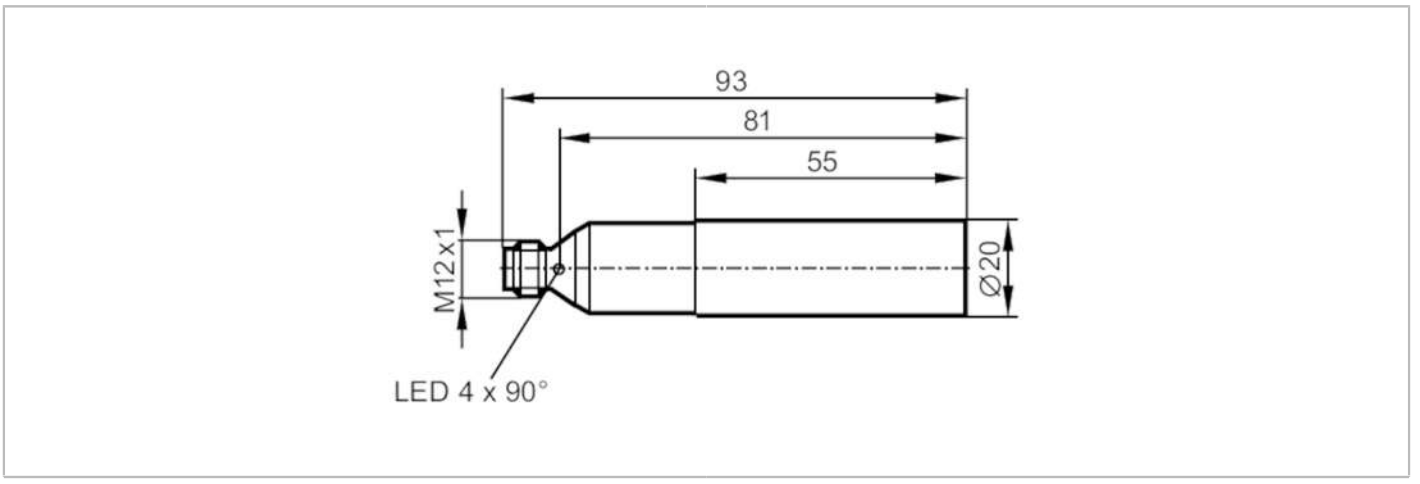

Product characteristics		
Electrical design		PNP
Output function		normally open
Sensing range	[mm]	10
Housing		cylindrical
Dimensions	[mm]	Ø 20 / L = 93
Electrical data		
Operating voltage	[V]	10...36 DC
Current consumption	[mA]	15; (24 V)
Protection class		II
Reverse polarity protection		yes
Outputs		
Electrical design		PNP
Output function		normally open
Max. voltage drop switching output DC	[V]	2.5
Permanent current rating of switching output DC	[mA]	250
Switching frequency DC	[Hz]	300
Short-circuit protection		yes
Type of short-circuit protection		pulsed
Overload protection		yes
Detection zone		
Sensing range	[mm]	10
Real sensing range Sr	[mm]	10 ± 10 %
Operating distance	[mm]	0...8.1
Accuracy / deviations		
Correction factor		steel: 1 / stainless steel: 0.7 / brass: 0.4 / aluminium: 0.3 / copper: 0.2
Hysteresis	[% of Sr]	1...15

IA5126

Inductive sensor

IA-3010-BPKG/US-104-KPS

Switch point drift	[% of Sr]	-10...10	
Operating conditions			
Ambient temperature	[°C]	-25...80	
Protection		IP 67	
Tests / approvals			
EMC		EN 60947-5-2	
MTTF	[years]	1801	
Mechanical data			
Weight	[g]	75.8	
Housing		cylindrical	
Mounting		non-flush mountable	
Dimensions	[mm]	Ø 20 / L = 93	
Materials		PBT	
Displays / operating elements			
Display		switching status	1 x LED, yellow
Accessories			
Items supplied		Mounting clamps: 1	
Remarks			
Pack quantity		1 pcs.	
Electrical connection - plug			

Connector: 1 x M12; coding: A



Connection

