BOS 18M-PS-RD23-S4
Ordering code: BOS01FA

BALLUFF
sensors worldwide

Diffuse sensor
Series 18M
Working Range: 0...400 mm

PNP (1x), NO (pin 4)
LED, red light
DC, direct current

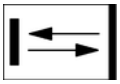

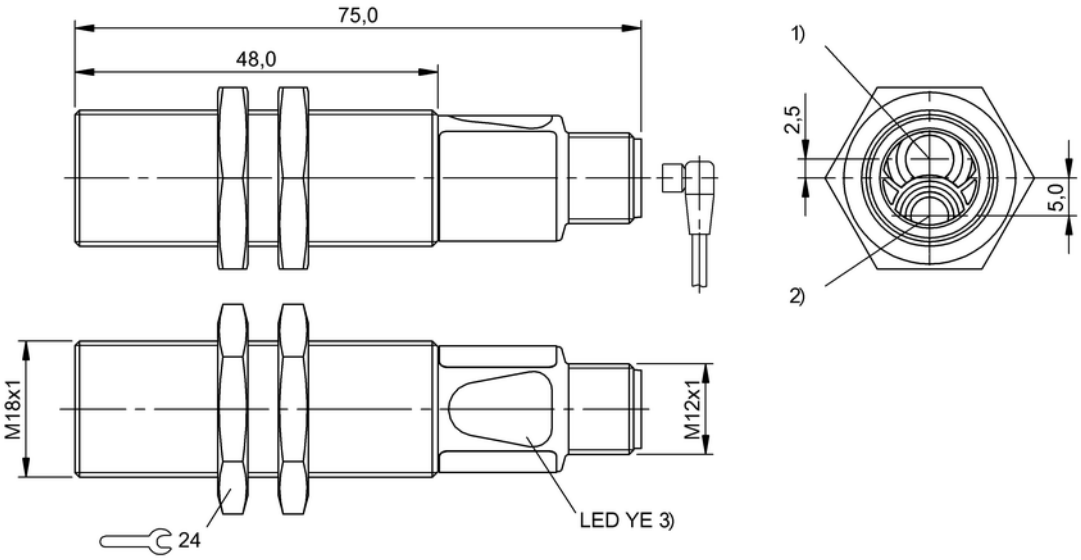

1) Optical axis receiver, 2) Optical axis emitter, 3) Light reception/Limit range

Characteristic data

Operating voltage	10...30 V DC
Connection	Connector, M12x1-S04
Switching freq. f max.	400 Hz
Indicator	Light receipt - LED YE
Adjuster	No
Short-circuit protected	yes
Protected against polarity reversal	yes
Enclosure Type per IEC 60529	IP67
Protection class	II

Optical data

Principle of optical operation	Light scanner, energetic
Switching function, optical	NO: light-on
Light type	LED, red light
Wavelength	626 nm
Ambient light max.	10,000 Lux
LED group per IEC 62471	Risk group 1

Electrical data

Rated operating voltage Ue DC	24,0 V
Effective operating current Ie	100 mA
Rated insulation voltage Ui	75 V DC
Load capacitance max. (at Ue)	0,1 µF
Ripple max. (% of Ue)	15
Switching output	PNP (1x)
Switching function	NO (pin 4)
Turn-off delay toff max.	1,25 ms
Turn-on delay ton max.	1,25 ms
No-load current max. Io at Ue	30 mA
Voltage drop Ud max. (at Ie)	2,5 V

Mechanical data

Eff. switching distance Sr	400 mm
Capture range Sd	0...400 mm
Beam characteristic	Divergent
Range Sn	Sn = 400 mm
Connector type	M12x1-S04
Sensing surface material	Glass
Housing material	Brass
Oberflächenschutz	Nickel-plated
Mounting type	Nut M18x1
Design	Cylinder, straight optics
Ambient temperature	-5...55 °C

Basic data

Basic standard	IEC 60947-5-2

The sensor is functional again after the overload has been eliminated.
Reference object (target): Gray card, 200 x 200, 90 % remission, axial approach.
For additional information, refer to user's guide.
Order accessories separately.

BOS 18M-PS-RD23-S4
Ordering code: BOS01FA

Diffuse sensor
Series 18M
Working Range: 0...400 mm

PNP (1x), NO (pin 4)
LED, red light
DC, direct current

