Safety Interlock Switch

KM Operating Instructions



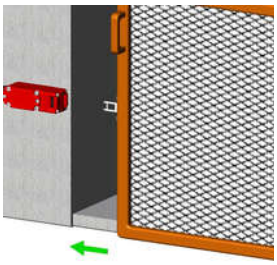

Sliding Guard

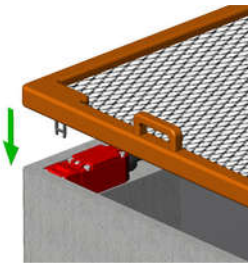

Lift off Guard

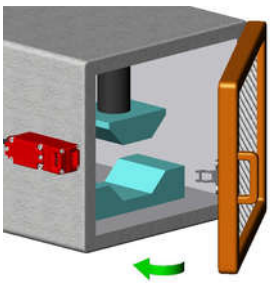

Hinged Guard

IMPORTANT NOTE:

Read and understand these instructions before installing, operating, or maintaining this equipment.
The product is designed to be a component of a customised safety orientated control system. It is the responsibility of each manufacturer to ensure the correct overall functionality of its systems and machines. IDEM, its subsidiaries and affiliates, are not in a position to guarantee all of the characteristics of a given system or product not designed by IDEM.

Application/Operation:

Tongue operated Safety Interlock Switches are designed to fit to the leading edge of sliding, hinged or lift off machine guards to provide positively operated switching contacts and provide a tamper resistant actuator mechanism. They are designed to provide robust position interlock detection for moving guards.

The switch is rigidly mounted to the frame of the guard or machine. The actuator is fitted to the moving part (frame) of the guard and is aligned to the switch entry aperture. The actuator profile is designed to match a cam mechanism within the switch head and provides a positively operated not easily defeatable interlock switch. When the actuator is inserted into the switch the safety contacts close and allow the machine start circuit to be enabled. When the actuator is withdrawn the safety contacts are positively opened and the machine circuit is broken.

Installation:

1. Installation of all IDEM interlock switches must be in accordance with a risk assessment for the individual application.
   Installation must only be carried out by competent personnel and in accordance with these instructions.

2. M5 mounting bolts must be used to fix the switch and actuator, the tightening torque to ensure reliable fixing is 4.0 Nm.
   Tightening torque for the lid screws, conduit entry plugs and cable glands must be 1.0 Nm to ensure IP seal.
   Only use the correct size gland for the conduit entry and cable outside diameter.
   Tightening torque for the connection terminal screws is 1.0 Nm, recommended conductor size is 1.5 – 2.5sq.mm.

3. Always fit a mechanical stop to the guard to prevent damage to the front of the switch.
   The switch head position can be rotated by opening the lid and then pulling the end cover away from the switch and then rotating to the position required.
   Set the actuator gap to 3mm when the guard is closed and against the stop. (See Fig. A.)
   Use alignment guides to ensure that the actuator enters the switch without interfering with the sides of the aperture.
   Always fit the aperture plug to the unused entry aperture to prevent foreign debris entering the switch mechanism.

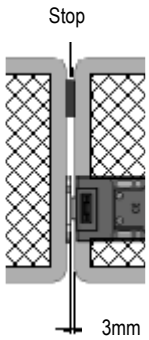

Fig. A

4. After installation check operation of all control circuits ensuring that when the actuator is out of the switch, the machine cannot be started.

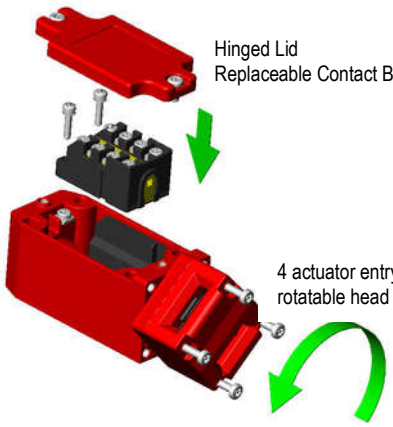

Contact operation at withdrawal of actuator

2NC 1NO (6.8 6.0 0 mm)

11/12	Open	
21/22	Open	
33/34		Open

3NC 1NO (6.8 6.0 0 mm)

11/12	Open	
21/22	Open	
31/32	Open	
43/44		Open

4NC (6.0 0 mm)

11/12	Open	
21/22	Open	
31/32	Open	
41/42	Open	

2NC 2NO (6.8 6.0 0 mm)

11/12	Open	
21/22	Open	
33/34		Open
43/44		Open

QC Quick Connect Versions



Quick Connect
Pin view from switch



Quick Connect (QC) M23 12 Way Male (connector Length 26mm) Pin view from switch	Switch Circuit	Quick Connect (QC) M12 8 Way Male (on Flying Lead 250mm) Pin view from switch
1 3	11 / 12	1 7
4 6	21 / 22	6 5
7 8	33 / 34 or 31 / 32	4 3
9 10	41 / 42 or 43 / 44	
12	Earth	8

Maintenance:

Every Week: Check correct operation of all circuits. If the actuator shows signs of bending or the switch head housing displays mechanical damage then remove and replace. IDEM will not accept responsibility for failure of the switch functions if the installation and maintenance requirements shown in this sheet are not implemented. These requirements form part of the product warranty.

Every 6 Months: Isolate power and remove cover. Check screw terminal tightness and check for signs of moisture ingress. Never attempt to repair any switch.

Safety Interlock Switch

Application Example: Door Interlock - Dual Channel non-monitored.

This system shows interlock switch circuits 11-12 and 21-22 configured to allow dual circuit direct feeds to contactor coils K1 and K2.
When the start button is pressed and then released, the auxiliary contacts (A) of contactors K1 and K2 maintain the feed to the contactor coils.
Opening of the Interlock switch or depressing the E Stop will isolate power to the contactor coils.
Re-start can only occur providing the Guard is closed, the E Stop is reset.

System is shown with the guards closed and the machine able to start.

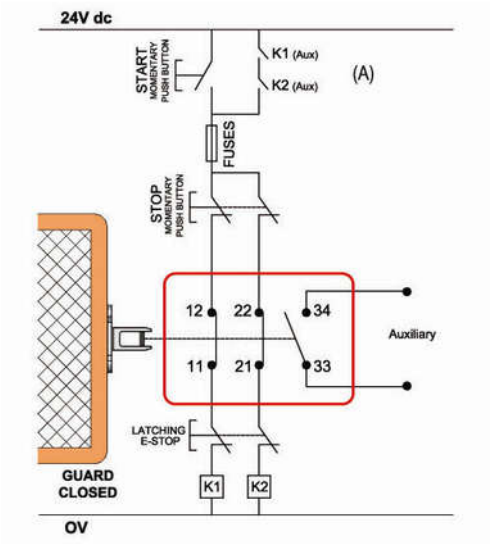

Application Example: Door Interlocks - Dual Channel monitored

The switch contacts 11-12 and 21-22 from each switch are wired in series to an SCR-3 Safety Relay to monitor for wiring short circuits.
This provides Dual Channel monitoring and a check of the contactor feedback circuits through the auxiliary contacts (A) of K1 and K2.
The SCR-3 monitors the switch and the contactors K1 and K2 and provides its own self-monitoring via force guided internal relays.

System is shown with machine stopped, guards closed and the contactors able to be energized.

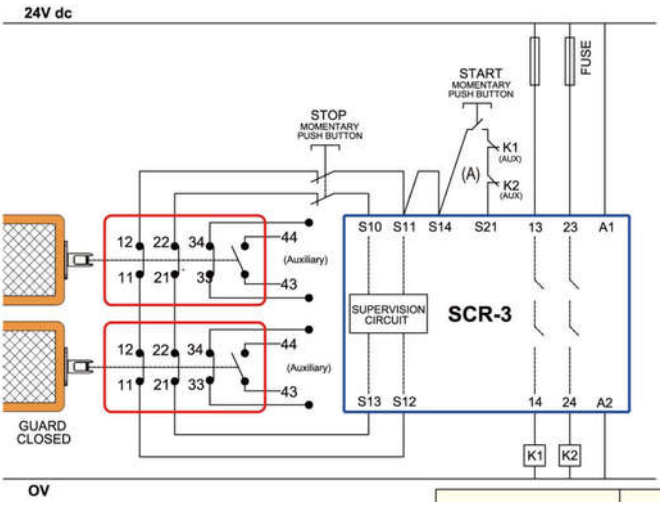

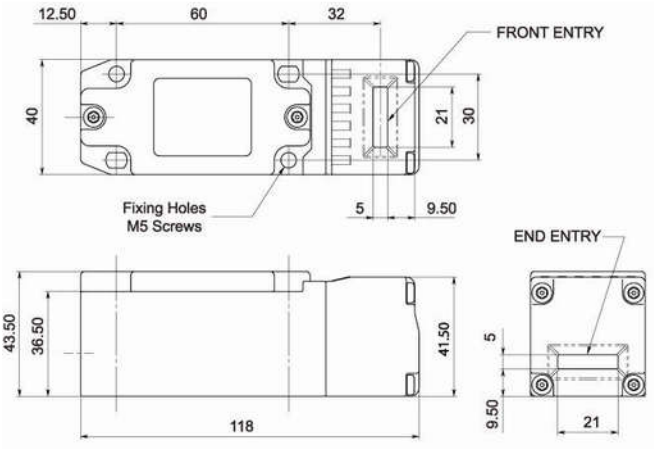

Information with regard to UL 508:
Type 1 Enclosures.
Control Number 35NV.
Use 16 - 12AWG copper conductors, rated 90°C minimum.
Intended for same polarity use and one polymeric conduit connection.
Electrical Rating:
Max. Switching Current / Volt / Amp:
120V. 6A. (720VA break) PF 0.38
240V. 3A. (720VA break) PF 0.38

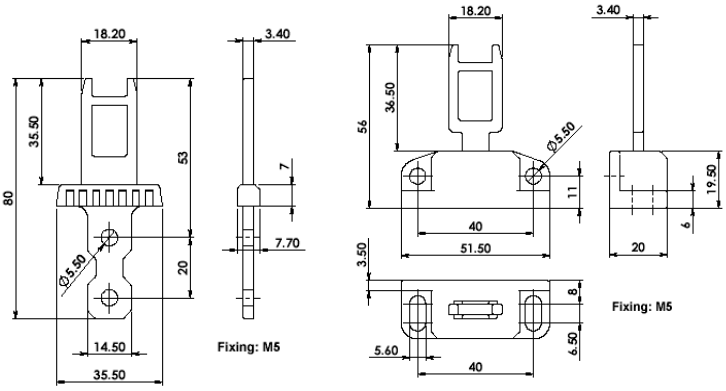

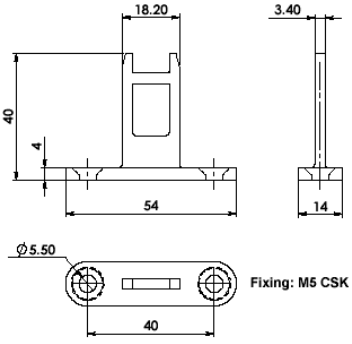

Standards:	EN1088 IEC 60947-5-1 EN 60204-1 ISO 13849-1 EN62061 EN 954-1 UL508
Safety Classification and Reliability Data:	
Mechanical Reliability B10d	2.5 x 10^6 operations at 100mA load
EN 954-1	up to Category 4 with Safety Relay
ISO 13849-1	up to PLe depending upon system architecture
EN 62061	up to SIL3 depending upon system architecture
Safety Data - Annual Usage	8 cycles per hour / 24 hours per day / 365 days
PFHd	3.44 x 10^{-8}
Proof Test Interval (Life)	35 years
MTTFd	356 years
Utilization Category	AC15 A300 3A.
Thermal Current (Ith)	10A
Rated Insulation / Withstand Voltages	500VAC / 2500 VAC
Actuator Travel/Force for Positive Opening	6mm/12N
Actuator entry minimum radius	175mm Standard 100mm Flexible
Maximum Approach / Withdrawal speed	600mm/s.
Body Material	Die Cast Metal Painted Red
Head Material	Die Cast Metal Painted Red or S/Steel
Enclosure Protection	IP67
Operating Temperature	-25C. 80C.
Vibration	IEC 68-2-6, 10-55Hz+1Hz, Excursion: 0.35mm, 1 octave/min
Conduit Entry	Various (See Sales Part Numbers)
Fixing	2 x M5

IDEM SAFETY SWITCHES Ltd., 2 Ormside Close, Hindley Industrial Estate, Hindley Green, Wigan, WN2 4HR UK. Tel: +44 (0)1942 257070 Fax.: +44 (0)1942 257076
IDEM (USA) 4416 Technology Drive, Fremont, CA 94538 Tel:510-445-0751 Fax:1866-431-7064 email: sales@idemsafety.com Web: www.idemsafety.com

Doc: 102510
Jan. 2013