U.301 - Self-gripping outside pullers with slim legs



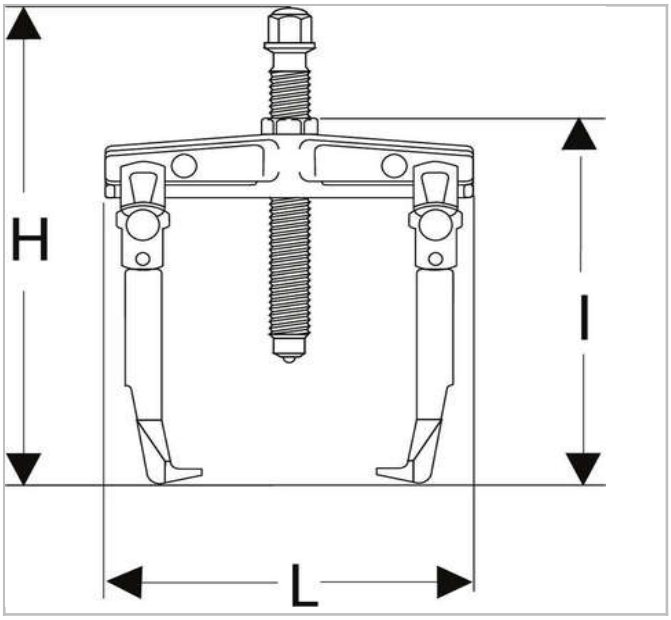

Description:

● Access: 2 slim leg puller.
● Comfort: self-gripping legs by return spring. The puller stays in rolling position even when not in tension.
● Adaptable puller accessory: slide hammer U.49AM. - Per tip U.301E1 (U.301 and U.301-150). - Per tip U.301E2 (U.301-200).

© FACOM 2020

	Depth Maxi [mm]	Length L [mm]	Height H [mm]	C Mini - Maxi [mm]	Length [mm]	Screw Size [']	Screw Size Multi [mm]	Tonnes [']	t [']	Weight [Kg]	Hex Size [mm]	Legs_Multi [']
U.301	90.0	83.0	153.0	10 - 80	130.0	U.301-04	10.0	0.9	9.0	0.5	10.0	U.301G
U.301-150	150.0	90.0	222.0	15 - 150	206.0	U.301-04-150	10.0	0.9	9.0	0.7	10.0	
U.301-200	200.0	120.0	300.0	15 - 200	268.0	U.301-04-200	13.0	1.3	13.0	1.1	13.0	

© FACOM 2020