73220107	DATA SHEET	LAPP
valid from: 18.11.2021	ÖLFLEX® SPIRAL 540 P	

Application

ÖLFLEX® SPIRAL 540 P cables are oil-resistant connecting cables with a core insulation of TPE and an outer sheath of Polyurethane for flexible use and fixed installation under increased mechanical load conditions. They are among others designed for use in dry, damp or wet conditions. Outdoor use: They may only be installed considering the temperature range. ÖLFLEX® SPIRAL 540 P cables are increased oil-resistant and at room temperature widely resistant to acids and caustic solutions. The outer sheath is resistant against high mechanical load, particularly to abrasion and scouring, cut resistant, microbe-proof and hydrolysis resistant. All materials used for these cables are halogen-free. ÖLFLEX® SPIRAL 540 P cables are designed for use under rough working conditions and to high wear and tear. The strength of recoiling and and the extension lengths up to 3.5 times of the original length are features of the high quality. They can also be used for connection of agricultural devices and heaters, provided that there is no risk of contact with hot particles or of thermal radiation.
Application range:
Mechanical engineering, construction industry, power tools like drill machines, circular hand saw, portable motors and construction machinery, medical equipment.

Dimensions of spiral cable

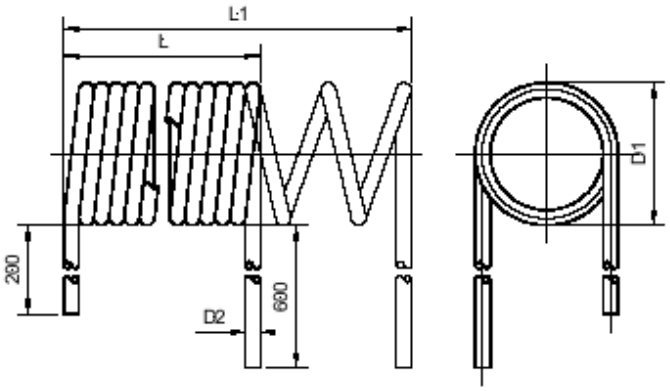

L	Unextended spiral length
L1	Max. extended length of spiral
D1	Approx. outer diameter of spiral
D2	Approx. outer diameter of spiral

Length of straight ends:
First end: 200 mm
Second end: 600 mm

Design

Design	based on standard EN 50525-2-21 bzw. VDE 0285-525-2-21 EN 50525-2-51 bzw. VDE 0285-525-2-51
Certification	The used uncoiled cable sold by the metre ÖLFLEX® 540 P has following VDE-approvals: U0/U: 300/500 V up to 1,0 mm²: ⊲ VDE-REG 6583 ⊳ U0/U: 450/750 V starting at 1,5 mm²: ⊲ VDE-REG 6584 ⊳
Conductor	fine wire strands of tinned copper acc. to IEC 60228 resp. EN 60228, class 5
Insulation	Thermoplastic elastomer (TPE)
Core identification code	up to 5 cores coloured acc. VDE 0293-308 resp. HD 308 S2 more than 5 cores: black cores with white numbers with GN/YE ground conductor acc. to EN 50334
Outer sheath	polyurethane compound TMPU acc. to EN 50363-10-2 colour: yellow, similar RAL 1016

Electrical properties at 20 °C

Specific volume resistivity	> 20 G Ω x cm	
Rated voltage	up to 1,0 mm²: starting at 1,5 mm²:	U_0 / U: 300 / 500 V U_0 / U: 450 / 750 V
Test voltage	up to 1,0 mm²: starting at 1,5 mm²:	3000 V AC 3500 V AC

Mechanical and thermal properties

Temperature range	for flexible applications: -30 °C up to +50 °C
Flammability	acc. to IEC 60332-1-2 resp. EN 60332-1-2
Oil resistance	acc. to EN 50363-10-2
MUD resistance	MUD resistant acc. to IEC 61892-4 Annex D
Tests	acc. to IEC 60811 resp. EN 60811, EN 50395, EN 50396
General requirements	These cables are conform to the EU Directive 2014/35/EU (Low Voltage Directive)

We reserve all rights according to DIN ISO 16016.

Environmental information These cables meet the substance-specific requirements of the EU Directive 2011/65/EU (RoHS).

We reserve all rights according to DIN ISO 16016.