I17001

Inductive area sensor

SIT-3070-BPKG

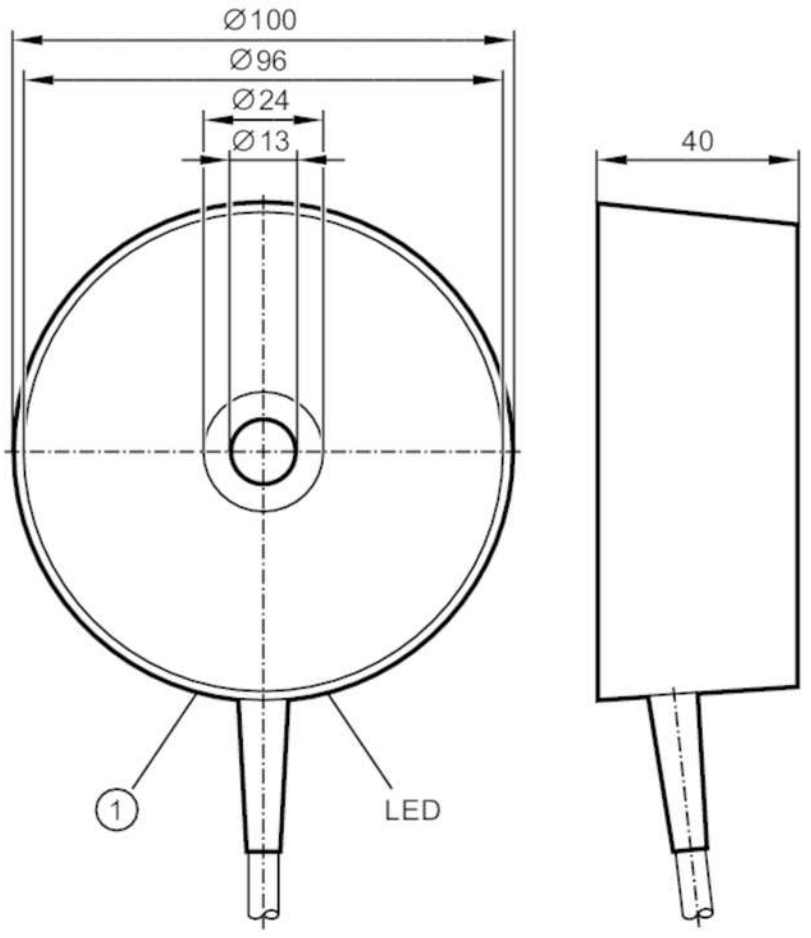

1 potentiometer

Product characteristics		
Electrical design		PNP
Output function		normally open
Sensing range	[mm]	20...70
Housing		cylindrical
Dimensions	[mm]	Ø 100 / L = 40
Electrical data		
Operating voltage	[V]	10...36 DC
Current consumption	[mA]	15; (24 V)
Protection class		II
Reverse polarity protection		yes
Outputs		
Electrical design		PNP
Output function		normally open
Max. voltage drop switching output DC	[V]	2.5

I17001

Inductive area sensor

SIT-3070-BPKG

Permanent current rating of switching output DC	[mA]	250	
Switching frequency DC	[Hz]	5	
Short-circuit protection		yes	
Type of short-circuit protection		pulsed	
Overload protection		yes	
Detection zone			
Sensing range	[mm]	20...70	
Sensing range adjustable		yes	
Factory setting sensing range	[mm]	70	
Real sensing range Sr	[mm]	70 ± 10 %	
Accuracy / deviations			
Correction factor		steel: 1 / stainless steel: 0.7 / brass: 0.4 / aluminium: 0.4 / copper: 0.3	
Hysteresis	[% of Sr]	< 15	
Switch point drift	[% of Sr]	-15...15	
Operating conditions			
Ambient temperature	[°C]	-20...70	
Protection		IP 65	
Tests / approvals			
EMC		EN 60947-5-2	
		EN 55011	class B
MTTF	[years]	724	
Mechanical data			
Weight	[g]	516.5	
Housing		cylindrical	
Mounting		non-flush mountable	
Dimensions	[mm]	Ø 100 / L = 40	
Materials		PBT	
Displays / operating elements			
Display		switching status	1 x LED, yellow
Accessories			
Items supplied		screws: 1	
Remarks			
Pack quantity		1 pcs.	

I17001

Inductive area sensor

SIT-3070-BPKG

Electrical connection

Cable: 2 m, PVC; 3 x 0.5 mm²

Connection

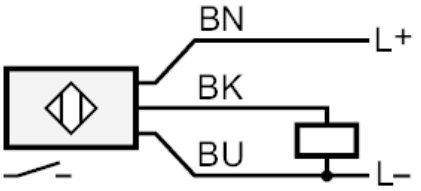

	Core colours :
BK =	black
BN =	brown
BU =	blue