PYRA® LED/SOUNDER COMBINATION MAX. 101 dB(A) / 23 cd
PY L-MA / PY L-MA RGB



RGB multi colour or single colour LED/Sounder combination. Maximal perceptible but discreet.

- Selectable signaling modes – Continuous steady on, blinking light or flashing light.
- External colour & mode control (RGB version only) – With PYRA® LED RGB you can state several situations with only one light. Change colour and mode easily by remote control!
- Selectable blink & flash frequencies – Adaptable to all your applications - select the frequency your gadget requires and boost the perceptibility.
- Selectable colour (RGB version only) – Choose the colour you require and stay flexible.
- Possibility to control visual and audible signaling separately – High flexibility in controlling different warning levels.
- Quick and easy to install – Several advantageous characteristics ease the installation process significantly.

RGB multi colour LED (option) · IP 66 protection system · NEMA 4/4X protection system · IK08 impact-proof housing · +55 °C / –40 °C operating temperature · brightness adjustable · 10 Years warranty · EAC EurAsian Conformity · UL UL approval · M12 connector (option)

3D-COVERAGE PERFORMANCE DATA		PY L-MA			
	VISUAL	Indicate	38.7 x 43.2 x 44.1 m	AUDIBLE 75 dB (A)	10.6 x 10.6 x 7.8 m
		Warn	17.2 x 19.2 x 19.6 m	80 dB (A)	5.8 x 5.9 x 4.4 m
		Alarm	8.6 x 9.6 x 9.8 m	85 dB (A)	3.2 x 3.3 x 2.2 m

To determine the exact signaling area for your needs, please use the online available Pfannenberg Sizing Software PSS.

PRODUCT		PY L-MA			
DATA					
Rated voltage		115 / 230 V AC	120 V DC	24 V AC	12-48 V DC
		50 / 60 Hz	–	50 / 60 Hz	–
Operating range		95 – 265 V	108 – 132 V	21.6 – 26.4 V	10 – 60 V
Current consumption light (max)		36mA @ 230 V AC	25 mA @ 120 V DC	167 mA @ 24 V AC	120 mA @ 24 V DC
Current consumption sound (max)		10 mA @ 230 V AC	40 mA @ 120 V DC	60 mA @ 24 V AC	15 mA @ 24 V DC
Sound pressure level		max. 101 dB (A)			
Sound level reduction		max. -20 dB			
Alarm tones		8			
Light alternation frequency		blinking light 1 Hz / 2 Hz I flashing light 0.1 Hz / 0.5 Hz / 0.75 Hz / 1 Hz / 2 Hz			
Light source		single colour: two high output LED / RGB: one high output LED			
Light intensity (DIN 5037) [1]		23 cd (reducible)			
Colour of RGB LED		; additionaly ○ though external control			
Max. viewing distance		111 m			
Operating temperature		–40 °C ... +55 °C			
Storage temperature		–40 °C ... +70 °C			
Installation position		any			
Degree of protection		IP 66 (EN 60529), NEMA TYPE 4/4X, IK 08 (EN 62262)			
Service life of the light source		≥50,000 hrs			
Material	lens	⁄ ● ● ● ● ● (○ ◐ - RGB) polycarbonate (PC)			
	housing	PC / ABS blend			
Cable entry		3 x M20 pre-embossed			
Connecting terminal		0.14 - 2.5 mm² fine stranded			
Weight		620 g			

[1] with a clear lens

TONE TABLE

NO.	DESCRIPTION	
2	Sawtooth, DIN tone 33404-3 Germany (emergency signal), PFEER PTAP	1200 Hz / 500 Hz, 1 s
9	Slow whoop, fire alarm, UK BS5839-1	970 Hz / 800 Hz, 1 s
131	Alternating tone, UK BS5839-1 (fire alarm, railway crossing)	1000 Hz / 800 Hz, 0,25 s / 0,25 s

[1] factory setting

NO.	DESCRIPTION	
160	Continuous tone (horn)	110 Hz
161	Continuous tone	3000 Hz
162 [1]	Interrupted tone	3000 Hz, 0,5 s / 0,5 s
163	Interrupted tone	3000 Hz, 25 ms / 25 ms
164	Slow whoop	2850 Hz / 2400 Hz, 143 ms

DIMENSIONS

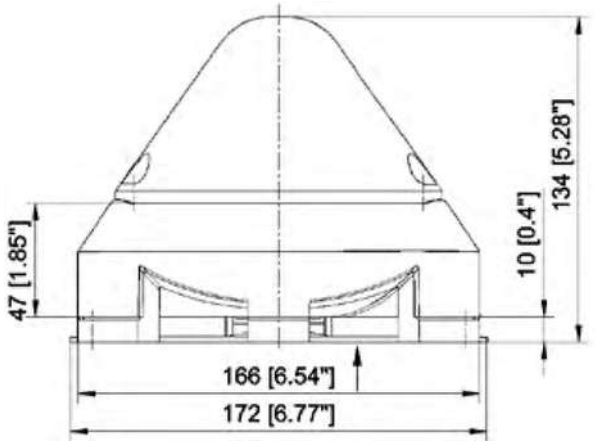

M20
cutout prepared (both sides)

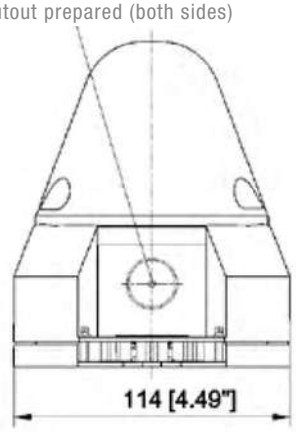

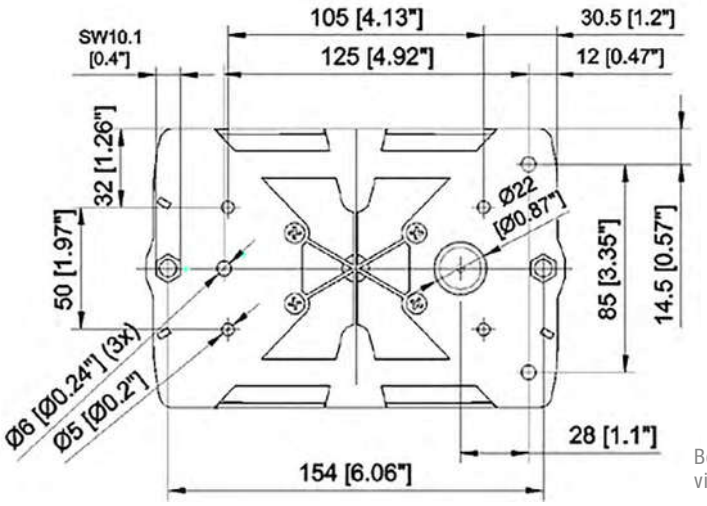

Bore pattern;
view from below

ARTICLE NO.		PY L-MA / PY L-MA RGB	
HOUSING COLOUR	LIGHT / LENS COLOUR	115 / 230 V AC; 120 V DC	12-48 V DC
	/	21556648055	21556818055
		21556643055	21556813055
		21556644055	21556814055
		21556645055	21556815055
		21556646055	21556816055

Article numbers for other colours and voltages on request.

OPTIONS / ACCESORIES	
Sealing plug, 4-pack	28300000002
Spare locking bolt, 4-pack	28912000000
Surface seal	28111500000

Version with M12 connection on request

CONFORMITY TO STANDARDS

The acoustic parameters conform to the European standard DIN EN ISO 7731:
“Ergonomic – alarms for public areas and workplaces – acoustic alarms“.

The requirement for an acoustic alarm signal can be found in the harmonised standards:
EN 60204-1 Electrical equipment of machines
EN 60825-1 Radiation safety of laser devices, identical to IEC 825 and DIN-VDE 0837

The visual characteristics of LED lights conform to the European standard DIN EN 842; **“Machine safety – visual alarm signals”.**
Requirements contained in the DIN EN 981 standard; **“Machine safety – system of acoustic and visual alarm and information signals”,** can be fulfilled.

The colours “red” for the emergency signal and “yellow” for the warning signal conform to the requirements of IEC 73 / DIN EN 60073 / VDE 0199; **“Coding of display devices and control elements using colours and supplementary means”.**
References to visual alarm devices can be found in the following standards:
EN 60825-1 Radiation safety of laser devices, identical to IEC 825 and DIN-VDE 0837
DIN EN 54 Fire alarm systems
DIN 54113-2 Radiation protection regulations for the technical operation of X-ray equipment up to 500 kV