HF41F SUBMINIATURE POWER RELAY

c UL us
File No.: E133481

VDE
File No.: 40020043

CQC
File No.: CQC09002035072

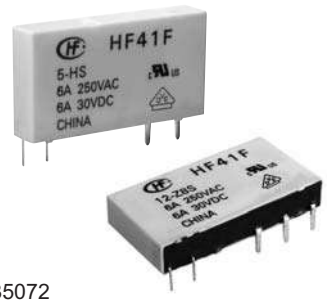

Features

- Slim size (width 5mm)
- High breakdown voltage 4kV (between coil and contacts)
- Surge voltage up to 6kV (between coil and contacts)
- Meeting VDE 0700, 0631 reinforce insulation
- High sensitive: Approx.170mW
- Sockets available
- 1 Form A and 1 Form C configurations
- Environmental friendly product (RoHS compliant)
- Outline Dimensions: (28.0 x 5.0 x 15.0) mm

CONTACT DATA

Contact arrangement	1A, 1C
Contact resistance	No gold plated:100mΩ max. (at 1A 6VDC) Gold plated: 30mΩ max. (at 1A 6VDC)
Contact material	$AgSnO_2$, AgNi
Contact rating (Res. load)	6A 250VAC / 30VDC
Max. switching voltage	400VAC / 125VDC
Max. switching current	6A
Max. switching power	1500VA / 180W
Mechanical endurance	1 x 10^7OPS
Electrical endurance	H type: 6 x 10^4OPS (6A 250VAC/30VDC, Resistive load, AgNi, at 85°C, 1s on 9s off) Z type: 3 x 10^4OPS (NO, 6A 250VAC/30VDC, Resistive load, AgNi, at 85°C, 1s on 9s off) 1 x 10^4OPS (NC, 6A 250VAC/30VDC, Resistive load, AgNi, at 85°C, 1s on 9s off)

CHARACTERISTICS

Insulation resistance		1000MΩ (at 500VDC)
Dielectric strength	Between coil & contacts	4000VAC 1 min
	Between open contacts	1000VAC 1 min
Operate time (at nomi.volt.)		8ms max.
Release time (at nomi.volt.)		4ms max.
Shock resistance[1)]	Functional	49m/s²
	Destructive	980m/s²
Vibration resistance[1)]		10Hz to 55Hz 1mm DA
Humidity		5% to 85% RH
Ambient temperature		-40°C to 85°C
Termination		PCB
Unit weight		Approx. 5g
Construction		Plastic sealed, Flux proofed

Notes: 1) Index is that of relay without socket.
2) The data shown above are initial values.
3) Please find coil temperature curve in the characteristic curves below.
4) Please do not install a SPDT(1 Form C) type relay on either of the smallest sides or facing downward.
5) UL insulation system: Class A.

COIL

Coil power	5VDC to 24VDC: Approx. 170mW 48VDC, 60VDC: Approx. 210mW

COIL DATA at 23°C

Nominal Voltage VDC	Pick-up Voltage VDC max.	Drop-out Voltage VDC min.	Max. Voltage VDC[2)]	Coil Resistance Ω
5	3.75	0.25	7.5	147 x (1±10%)
6	4.50	0.30	9.0	212 x (1±10%)
9	6.75	0.45	13.5	476 x (1±10%)
12	9.00	0.60	18	848 x (1±10%)
18	13.5	0.90	27	1906 x (1±15%)
24	18.0	1.20	36	3390 x (1±15%)
48[3)]	36.0	2.40	72	10600 x (1±15%)
60[3)]	45.0	3.00	90	16600 x (1±15%)

Notes: 1) When require pick-up voltage≤70% nominal voltage, special order allowed .
2) Maximum voltage refers to the maximum voltage which relay coil could endure in a short period of time.
3) For products with rated voltage ⩾ 48V, measures should be taken to prevent coil overvoltage in order to protect coil in test and application (eg. Connect diodes in parallel).

SAFETY APPROVAL RATINGS

UL/CUL	6A 30VDC at 85°C 6A 277VAC at 85°C R300 B300
VDE	6A 30VDC at 85°C 6A 250VAC at 85°C

Notes: 1) All values unspecified are at room temperature.
2) Only typical loads are listed above. Other load specifications can be available upon request.

ORDERING INFORMATION

	HF41F /	12	-H	8	S	T	G	(XXX)
Type								
Coil voltage	5, 6, 9, 12, 18, 24, 48, 60VDC							
Contact arrangement	**H:** 1 Form A	**Z:** 1 Form C						
Version [1]	**8:** Flat pack version	**Nil:** Vertical version						
Construction[2)3)]	**S:** Plastic sealed	**Nil:** Flux proofed						
Contact material	**T:** $AgSnO_2$	**Nil:** AgNi						
Contact plating[4)]	**G:** Gold plated	**Nil:** No gold plated						
Special code[5)]	**XXX:** Customer special requirement	**Nil:** Standard						

Notes: 1) We recommend flux proofed types for the flat pack version.

2) We recommend flux proofed types for a clean environment (free from contaminations like H_2S, SO_2, NO_2, dust, etc.). We suggest to choose plastic sealed types and validate it in real application for an unclean environment (with contaminations like H_2S, SO_2, NO_2, dust, etc.).

3) Contact is recommended for suitable condition and specifications if water cleaning or surface process is involved in assembling relays on PCB.

4) For gold plated type, the min. switching current and min. switching voltage is 10mA 5VDC.

5) The customer special requirement express as special code after evaluating by Hongfa. e.g. (210) stands for pick-up voltage less than 70% of norminal voltage. e.g. (414) stands for wide coil pin type.

OUTLINE DIMENSIONS, WIRING DIAGRAM AND PC BOARD LAYOUT

Unit: mm

Outline Dimensions

1 Form A

Vertical version

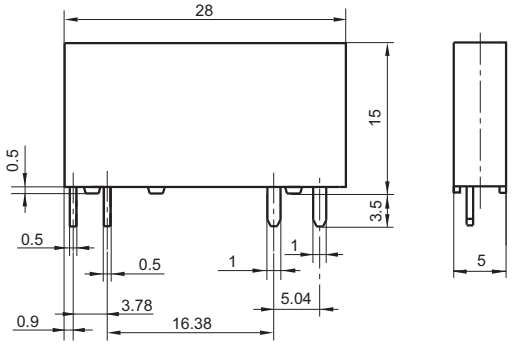

1 Form C

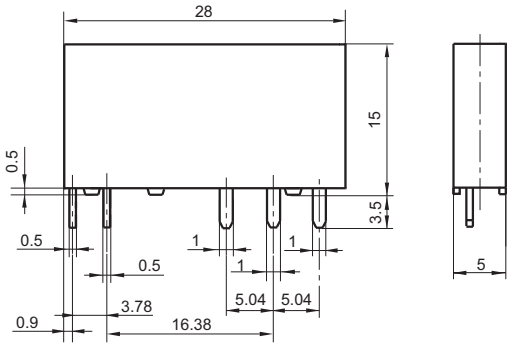

Flat pack version

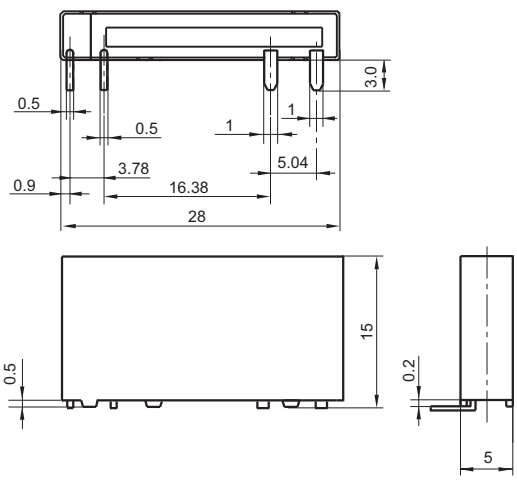

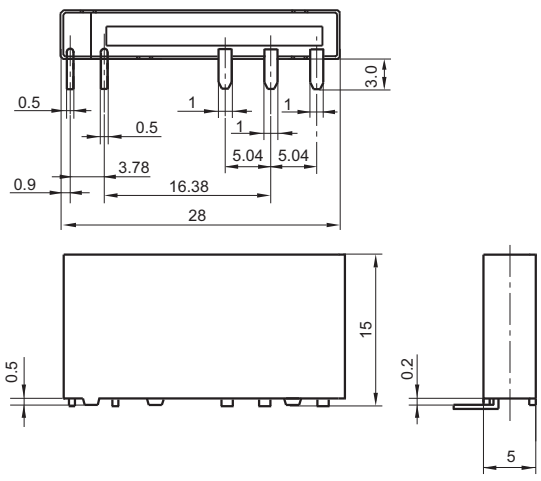

OUTLINE DIMENSIONS, WIRING DIAGRAM AND PC BOARD LAYOUT

Unit: mm

Outline Dimensions

1 Form A

Special code: (414)

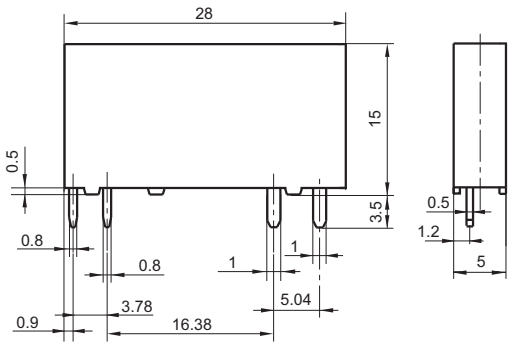

1 Form C

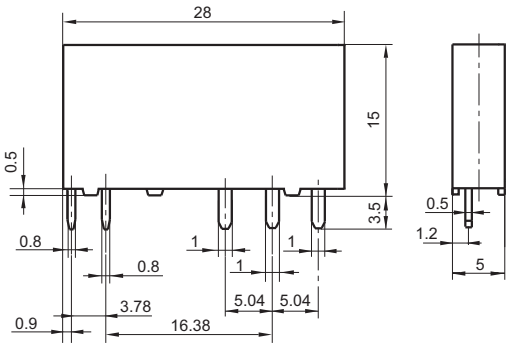

PCB Layout (Bottom view)

1 Form A

Vertical version

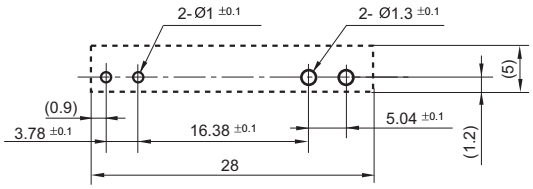

1 Form C

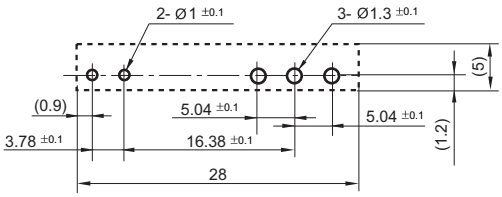

Flat pack version

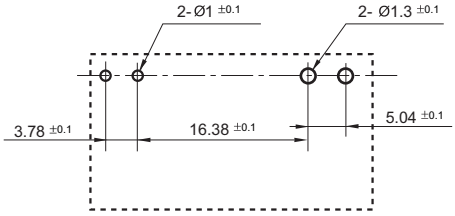

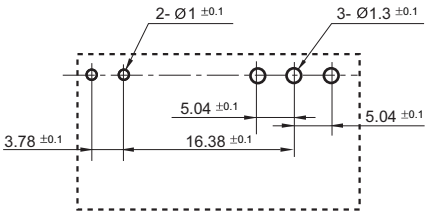

Special code: (414)

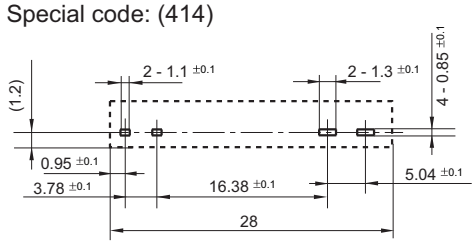

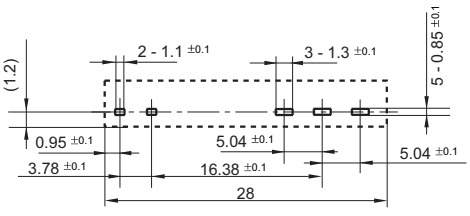

Wiring Diagram (Bottom view)

1 Form A



1 Form C



Remark: 1) In case of no tolerance shown in outline dimension: outline dimension ≤1mm, tolerance should be ±0.2mm; outline dimension >1mm and ≤5mm, tolerance should be ±0.3mm; outline dimension >5mm, tolerance should be ±0.4mm.

2) The tolerance without indicating for PCB layouts is always ±0.1mm.

CHARACTERISTIC CURVES

MAXIMUM SWITCHING POWER

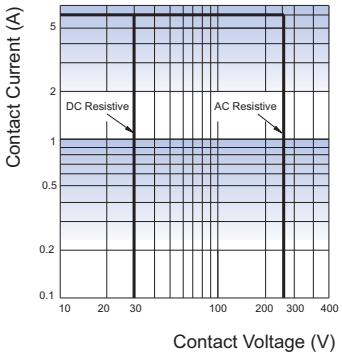

ENDURANCE CURVE

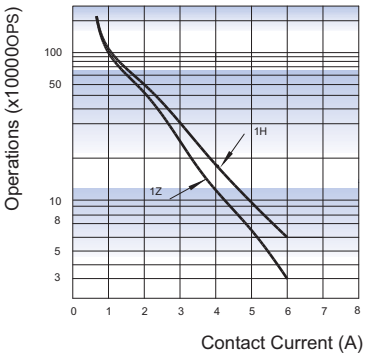

Test conditions:
NO, AgNi, Resistive load, 250VAC,
Flux proofed, Room temp., 1s on 9s off.

COIL TEMPERATURE RISE

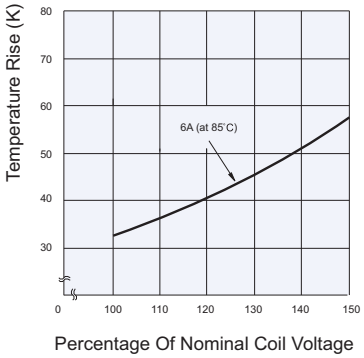

Test conditions:
6A 85℃
(Typical curve of 24VDC standard type)

Disclaimer

The specification is for reference only. See to "Terminology and Guidelines" for more information. Specifications subject to change without notice. We could not evaluate all the performance and all the parameters for every possible application. Thus the user should be in a right position to choose the suitable product for their own application. If there is any query, please contact Hongfa for the technical service. However, it is the user's responsibility to determine which product should be used only.

© Xiamen Hongfa Electroacoustic Co., Ltd. All rights of Hongfa are reserved.