Technical data sheet
Inductive switch
Part no.: 50153115
IS D08MM/4NO-2E0-M8.3



For Illustration purposes only

Contents

- Technical data
- Dimensioned drawings
- Electrical connection
- Diagrams
- Operation and display
- Part number code
- Notes
- Accessories

Technical data

Leuze

Basic data

Series	D08
type. operating range limit S_n	2 mm
Operating range S_a	0 ... 1.6 mm

Characteristic parameters

MTTF	340 years

Electrical data

Protective circuit	Inductive protection
	Polarity reversal protection
	Short circuit protected

Performance data

Supply voltage U_B	10 ... 30 V, DC
Residual ripple	0 ... 10 %, From U_B
Open-circuit current	0 ... 15 mA
Temperature drift, max. (in % of S_r)	15 %, Over the entire operating temperature range
Repeatability, max. (in % of S_r)	5 %, For U_B = 20 … 30 V DC, ambient temperature T_a = 23 °C ± 5 °C
Switching hysteresis	15 %

Outputs

Number of digital switching outputs	1 Piece(s)

Switching outputs

Voltage type	DC
Switching current, max.	100 mA
Residual current, max.	0.1 mA
Voltage drop	≤ 2 V

Switching output 1

Switching element	Transistor, PNP
Switching principle	NO (normally open)

Time behavior

Switching frequency	1,500 Hz
Readiness delay	100 ms

Connection

Number of connections	1 Piece(s)

Connection 1

Function	Signal OUT
	Voltage supply
Type of connection	Connector
Thread size	M8
Type	Male
Material	Stainless steel
No. of pins	3 -pin

Mechanical data

Design	Cylindrical
Dimension (Ø x L)	8 mm x 45 mm
Thread size	M8 x 1 mm
Type of installation	Embedded/flush
Housing material	Stainless steel
Stainless steel housing	V2A
Sensing face material	Plastic, Polybutylene (PBT)
Net weight	9 g
Housing color	Red, RAL 3000
	Silver
Type of fastening	Mounting thread
	Via optional mounting device
Standard measuring plate	12 x 12 mm², Fe360

Operation and display

Type of display	LED
Number of LEDs	1 Piece(s)

Environmental data

Ambient temperature, operation	-25 ... 70 °C
Ambient temperature, storage	-25 ... 70 °C

Certifications

Degree of protection	IP 67
Protection class	III
Approvals	c UL US
Test procedure for EMC in accordance with standard	IEC 61000-4-2
	IEC 61000-4-3
	IEC 61000-4-4
Standards applied	IEC 60947-5-2

Correction factors

Aluminum	0.38
Stainless steel	0.71
Copper	0.31
Brass	0.41
Fe360 steel	1

Classification

Customs tariff number	85365019
ECLASS 5.1.4	27270101
ECLASS 8.0	27270101
ECLASS 9.0	27270101
ECLASS 10.0	27270101
ECLASS 11.0	27270101
ECLASS 12.0	27274001
ECLASS 13.0	27274001
ECLASS 14.0	27274001
ECLASS 15.0	27274001
ECLASS 16.0	27274001
ETIM 5.0	EC002714
ETIM 6.0	EC002714
ETIM 7.0	EC002714
ETIM 8.0	EC002714
ETIM 9.0	EC002714
ETIM 10.0	EC002714
UNSPSC 26.08	39122230

Dimensioned drawings

All dimensions in millimeters

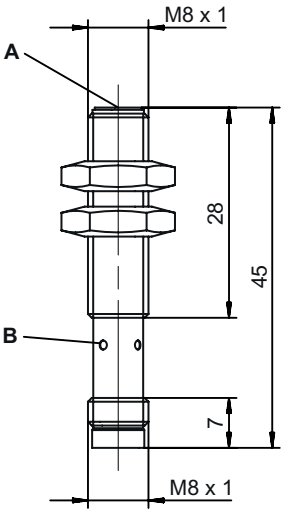

A Active surface
B Yellow LED



Electrical connection

Connection 1

Function	Signal OUT
	Voltage supply
Type of connection	Connector
Thread size	M8
Type	Male
Material	Stainless steel
No. of pins	3 -pin

Pin	Pin assignment
1	V+
3	GND
4	OUT

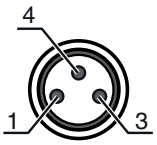

Diagrams

Embedded/flush installation

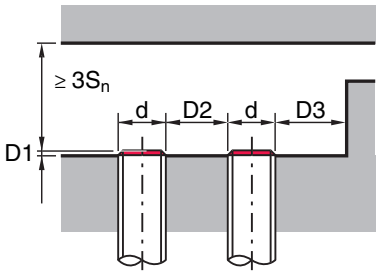

D	8
D1 [mm]	0
D2 [mm]	7
D3 [mm]	2

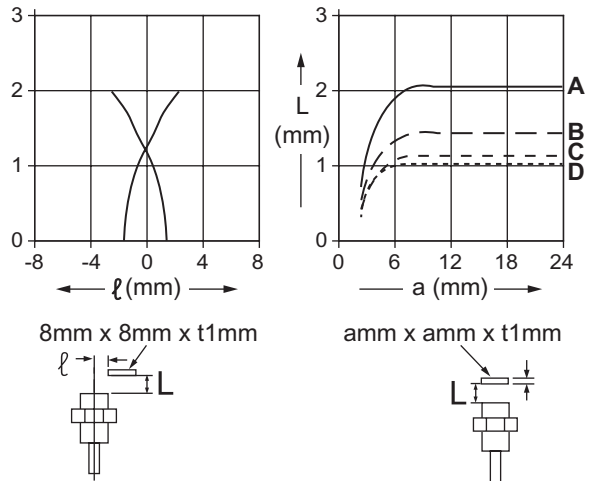

Operation and display

LED	Display	Meaning
1	Yellow, continuous light	Switching output/switching state

Part number code

Part designation: **IS AAABB/CCC-DDD-EEE**

IS	**Operating principle / construction** IS: inductive switch, standard design
AAA	**Series** D08: series with M8 x 1 external thread D12: series with M12 x 1 external thread D18: series with M18 x 1 external thread D22: series in cubic design with 18 x 18 mm D30: series with M30 x 1.5 external thread
BB	**Housing** MM: metal housing (active surface: plastic) / metric thread PP: Plastic housing
CCC	**Output current / supply** 2NC: NPN transistor, NC contact 2NO: NPN transistor, NO contact 4NC: PNP transistor, NC contact 4NO: PNP transistor, NO contact

Part number code

DDD	**Measurement range / type of installation** 2E0: typ. range limit 2.0 mm / embedded/flush installation 2N5: typ. range limit 2.5 mm / non-embedded/non-flush installation 4E0: typ. range limit 4.0 mm / embedded/flush installation 4N0: typ. range limit 4.0 mm / non-embedded/non-flush installation 5E0: typ. range limit 5.0 mm / embedded/flush installation 8E0: typ. range limit 8.0 mm / embedded/flush installation 8N0: typ. range limit 8.0 mm / non-embedded/non-flush installation 10E: typ. range limit 10.0 mm / embedded/flush installation 12N: typ. range limit 12.0 mm / non-embedded/non-flush installation 15E: typ. range limit 15.0 mm / embedded/flush installation 15N: typ. range limit 15.0 mm / non-embedded/non-flush installation 16N: typ. range limit 16.0 mm / non-embedded/non-flush installation 30N: typ. range limit 30.0 mm / non-embedded/non-flush installation
EEE	**Electrical connection** n/a: cable, standard length 2000 mm, 3-wire M8.3: M8 connector, 3-pin (plug) M12: M12 connector, 4-pin (plug)

Note

- A list with all available device types can be found on the Leuze website at www.leuze.com.

Notes

Observe intended use!

- This product is not a safety sensor and is not intended as personnel protection.
- The product may only be put into operation by competent persons.
- Only use the product in accordance with its intended use.

For UL applications:

- For UL applications, use is only permitted in Class 2 circuits in accordance with the NEC (National Electric Code).

Accessories

Connection technology - Connection cables

	Part no.	Designation	Article	Description
	50130842	KD U-M8-3A-P1-020	Connection cable	Application: Oil and lubricant resistant Connection 1: Connector, M8, Axial, Female, 3 -pin Connector, LED: No Connection 2: Open end Shielded: No Cable length: 2,000 mm Sheathing material: PUR

Accessories

	Part no.	Designation	Article	Description
	50130844	KD U-M8-3A-P1-050	Connection cable	Application: Oil and lubricant resistant Connection 1: Connector, M8, Axial, Female, 3 -pin Connector, LED: No Connection 2: Open end Shielded: No Cable length: 5,000 mm Sheathing material: PUR
	50130837	KD U-M8-3A-V1-020	Connection cable	Application: Chemical resistant Connection 1: Connector, M8, Axial, Female, 3 -pin Connector, LED: No Connection 2: Open end Shielded: No Cable length: 2,000 mm Sheathing material: PVC
	50130860	KD U-M8-3W-V1-020	Connection cable	Application: Chemical resistant Connection 1: Connector, M8, Angled, Female, 3 -pin Connector, LED: No Connection 2: Open end Shielded: No Cable length: 2,000 mm Sheathing material: PVC

Mounting technology - Other

	Part no.	Designation	Article	Description
	50111497	MC 008K	Clamp	Diameter, inner: 8 mm Design of mounting device: Mounting clamp Fastening, at system: Through-hole mounting Mounting bracket, at device: Clampable Type of mounting device: Rigid Material: Plastic

Note

A list with all available accessories can be found on the Leuze website in the Download tab of the article detailed page.