Brand of NTN corporation

Technical data

USFD202

Bearing units



Grey cast housing, radial insert ball bearing with socket set screws, single lip seal

KIT CONTENT

US.202.G2, FD203

VISUAL (S)

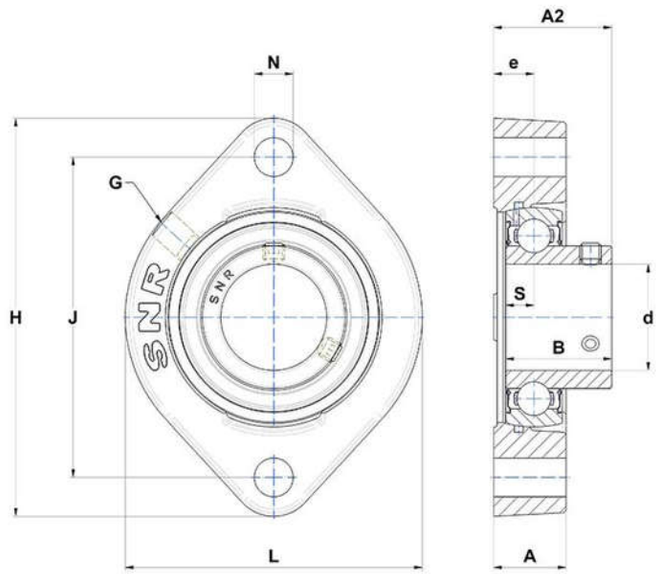

PRODUCT DEFINITION

Brand	SNR
A - Housing height	15 mm
A2 - Total height from mounting surface	24,4 mm
B - Width of Inner Ring	22 mm
d - Shaft diameter	15 mm
e - Distance mounting surface to bearing center	8,4 mm

PRODUCT DEFINITION	
G - Grease fitting	M6x1
H - Housing length, width or diameter	81 mm
J - Mounting holes distance	63,5 mm
L - Housing width / diameter	58,7 mm
N - Mounting hole dimension	6,5 mm
S - Distance front side/bearing centre	6 mm

PRODUCT PERFORMANCE	
C - Dynamic load rating	9550000 mN
C0 - Static load rating	4780000 mN
Operating temperature min.	253,15 °K
Operating temperature max.	373,15 °K

OTHER FEATURES	
Mass	0,28 kg
Recommended tightening torque for set screw	3.5 N-m