E43414

REAR MOUNT ADAPTER

REAR MOUNT ADAPTER

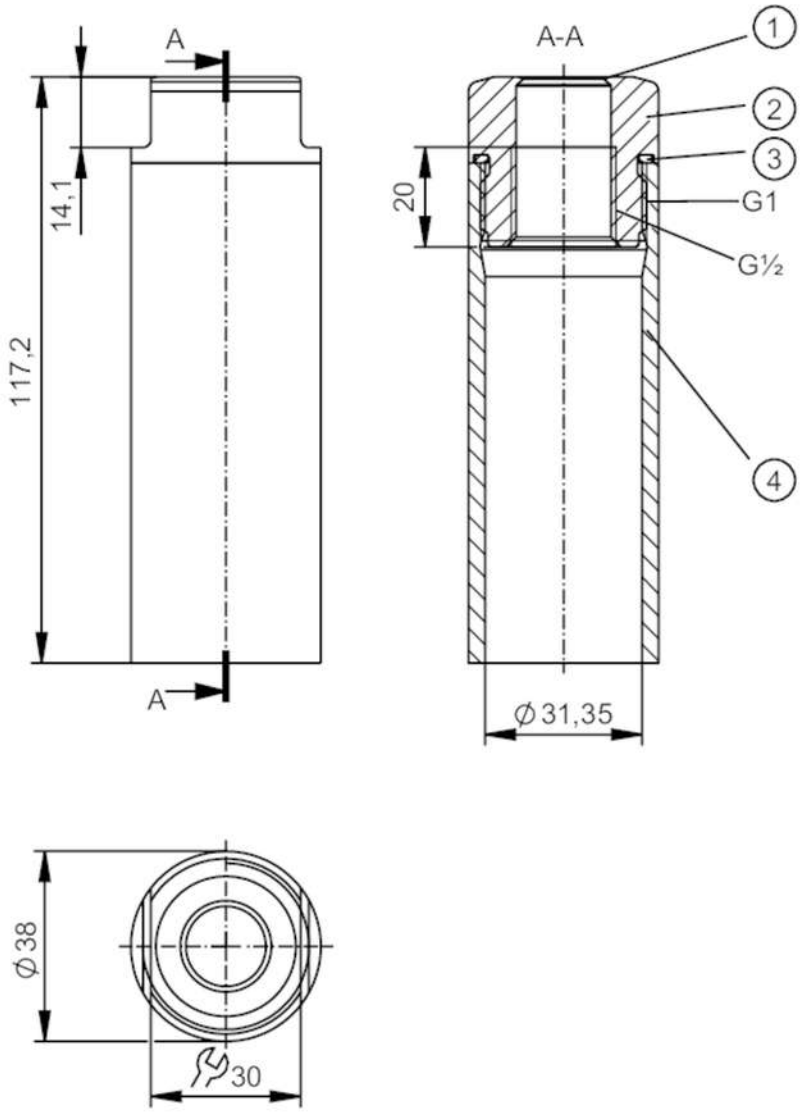

1 sealing edge
2 Adapter G1/2 - G1
3 Gasket
4 weld-on pipe

Application		
Design		adapter for rear sensor installation
Pressure rating	[bar]	50
Note on pressure rating		for the connection sensor - adapter
Mechanical data		
Weight	[g]	534.5
Materials		Adapter: stainless steel (1.4435 / 316L); weld-on pipe: stainless steel (1.4571/316Ti); Sealing: FKM
Sensor connection		G 1/2 sealing cone
Process connection		Ø 38 mm
Surface characteristics Ra/Rz of the wetted parts		0.8 / 4

E43414

REAR MOUNT ADAPTER

REAR MOUNT ADAPTER

Remarks	
Remarks	due to the adjustment of the ambient temperature of the installed sensor to the medium temperature, the medium temperature must not exceed the specified data for the ambient temperature of the installed sensor.
Pack quantity	1 pcs.