Safety Interlock Switch with Guard Locking

KL4-SS Operating Instructions



Version with REQUEST button
(Momentary Push Button with
1 set of changeover contacts
in Lid Assembly)

Stainless Steel 316

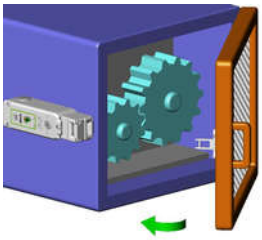

Hinged Guard

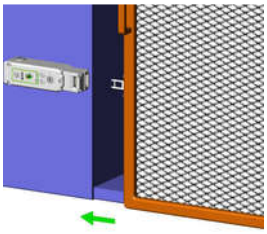

Sliding Guard

IMPORTANT NOTE:

Read and understand these instructions before installing, operating, or maintaining this equipment.
The product is designed to be a component of a customised safety orientated control system. It is the responsibility of each manufacturer to ensure the correct overall functionality of its systems and machines. IDEM, its subsidiaries and affiliates, are not in a position to guarantee all of the characteristics of a given system or product not designed by IDEM.

Application and Operation:

The KL4-SS Safety Interlock Switch with Guard Locking is designed to fit to the leading edge of sliding or hinged guard doors to provide positively operated switching contacts and provide a tamper resistant key mechanism. The KL4-SS is designed to provide robust position interlock detection and holding closed of moving guards. The switch is rigidly mounted to the frame of the guard or machine. The actuator is fitted to the moving part (frame) of the guard and is aligned to the switch entry aperture. The actuator profile is designed to match a cam mechanism within the switch head and provides a positively operated not easily defeatable interlock switch. When the guard is closed and the actuator is inserted into the switch the safety contacts close, the actuator is locked and the machine start circuit can be enabled. When the solenoid is energised the safety contacts are positively opened, the machine stop circuit is broken and the guard door can be opened.

Installation:

1. Installation of all interlock switches must be in accordance with a risk assessment for the individual application.
   Installation must only be carried out by competent personnel and in accordance with these instructions.

2. M5 mounting bolts must be used to fix the switch and actuator, the tightening torque to ensure reliable fixing is 4.0 Nm.
   To prevent loosening of the switch after installation, always fix the M5 mounting bolts with a thread-locking compound or secure using self locking nuts.
   Tightening torque for the lid screws, conduit entry plugs and cable glands must be 1.5 Nm to ensure IP seal.
   Only use the correct size gland for the conduit entry and cable outside diameter.
   Tightening torque for the connection terminal screws is 0.7 Nm, max conductor size is 1.0 sq.mm.
   The switch head position can be selected by removing the actuator, loosening the 4 head bolts and then rotating the head to the position required. Re-tighten the head bolts and then check actuator insertion and withdrawal.
   Tightening torque for the head bolts is 1.5Nm.
   The switch is supplied with removable conductor links fitted 41/42 and 31/32. If required by the control circuit these may be removed to offer independent monitoring of the solenoid locking function or the actuator.

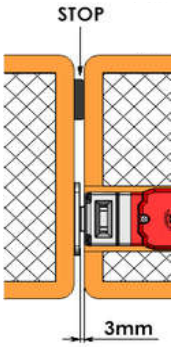

Fig. A

3. Always fit a mechanical stop to the guard to prevent damage to the front of the switch.
   Set the actuator gap to 3mm when the guard is closed and against the stop. (See Fig. A.)
   Use alignment guides to ensure that the actuator enters the switch without interfering with the sides of the aperture.
   Ensure access to at least one of the manual release points.
   Always fit the aperture plug to the unused entry aperture to prevent debris entering the switch mechanism.

4. After installation check operation of all control circuits and the locking function.
   For applications with a run down time after removing power, ensure that the correct timing allowance has been before energising the solenoid.
   LED 1 RED will illuminate when power is applied to A1 and A2 (solenoid feed).
   LED 2 GREEN (if used) will be illuminated when the actuator is locked.

5. IMPORTANT!

At installation choose the status of Terminals 33 and 34 by setting the slide switch inside the switch housing.

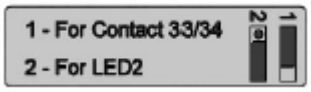



If LED2 is used always check for correct .dc polarity.
Terminal 33: 0V.dc Terminal 34: +24V.dc

Fig. B



Top or Side
Manual release points

Manual Release Key
Part No. 140123

8 actuator entry positions
rotatable head

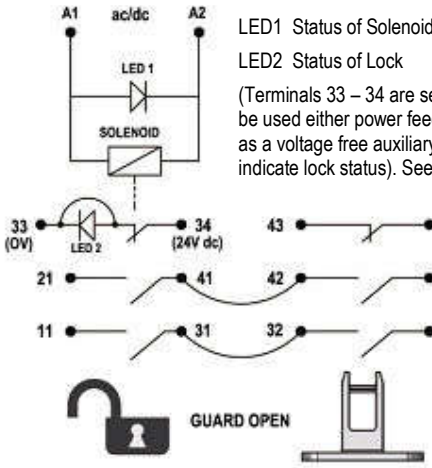

LED1 Status of Solenoid

LED2 Status of Lock

(Terminals 33 – 34 are selectable to be used either power feed to LED2 or as a voltage free auxiliary circuit to indicate lock status). See Fig. B.

The connections between terminals 31/32 and 41/42 are made using wire links inside the switch (factory fitted).
These links are able to be removed at installation to allow individual monitoring of the lock status and tongue status.

Maintenance:

Every Week: Check correct operation of all circuits and the Lock function.
If the actuator shows signs of bending or the switch head housing displays mechanical damage then remove and replace the whole device.
IDEM will not accept responsibility for failure of the switch functions if the installation and maintenance requirements shown in this sheet are not implemented.

Never attempt to remove the internal screws or parts of the mechanism, any attempt to do so will invalidate the product warranty. Never attempt to repair any switch.

Every 6 Months: Isolate power and remove cover. Check screw terminal tightness and check for signs of moisture ingress.

THESE INSTRUCTIONS FORM PART OF THE PRODUCT WARRANTY.

Safety Interlock Switch with Guard Locking

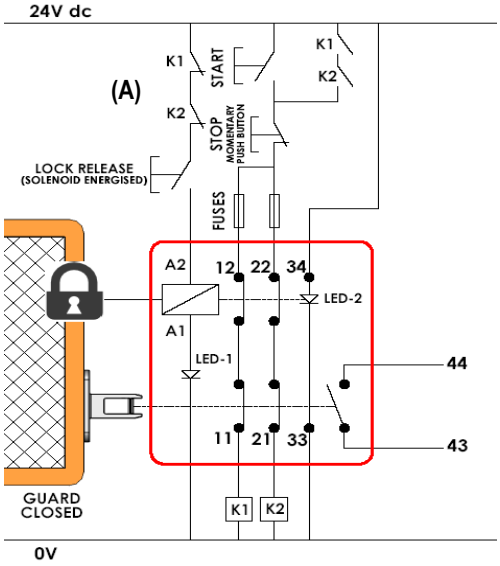

Application Example: Door Interlock with Guard locking - Dual Channel (non-monitored).

The guard is locked closed until the solenoid is energized. The solenoid can only be energized when the auxiliary contacts (A) of contactors K1 and K2 are closed.
When the lock release button is pushed the locking mechanism is released and the switch contacts 11-12 and 21-22 are opened. These contacts are in series with contactor coils of K1 and K2 and will prevent re-start whilst the guard is open. If after pressing the Stop button either contactor K1 or K2 stays closed the motor will stop but the solenoid cannot be energized or the guard opened.

LED 1 provides visual indication of solenoid power applied.
LED 2 provides visual indication of guard locked and machine able to start.

System is shown with machine stopped, guard closed and locked, and the solenoid able to be energised.

Quick Connect (QC) M23 12 way Male Plug (Pin view from switch)	Switch Circuit
1 3	A1 A2
4 6	11 / 12
7 8	21 / 22
2 5	43 / 44
9	33
10	34
Earth	12

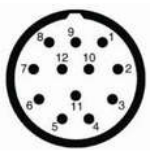

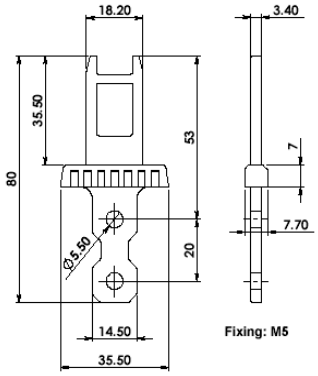

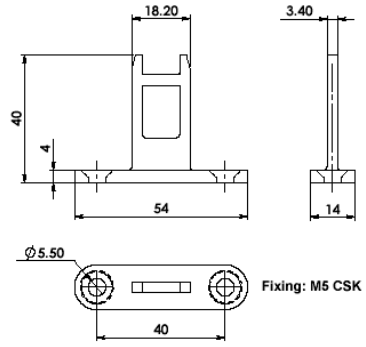

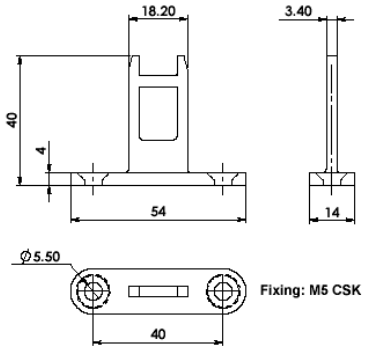

Conforming to Standard:	EN1088, IEC60947-5-1, EN60204-1, ISO13849-1, EN62061, EN954-1, UL508
Safety Classification and Reliability Data:	
Mechanical Reliability B10d	2.5 x 10^6 operations at 100mA load
EN954-1	Up to Category 4 with Safety Relay
ISO13849-1	up to PLe depending upon system architecture
EN62061	up to SIL3 depending upon system architecture
Safety Data – Annual Usage	8 cycles per hour / 24 hours per day / 365 days
PFHd	3.44 x 10^{-8}
Proof Test Interval (Life)	35 years
MTTFd	356 years
Solenoid Voltage (by part number)	24V ac/dc or 110V ac or 230V ac
Solenoid Wattage	12W
LED 2 Supply Voltage	24V dc
Utilization Category	AC15 A300 3A
Thermal Current (Ith)	5A
Rated Insulation/Withstand Voltages	600VAC/2500VAC
Travel for Positive Opening	10mm
Actuator Entry Minimum Radius	175mm Standard 100 Heavy Duty
Maximum Approach/Withdrawal Speed	600mm/s
Body Material	Stainless Steel 316
Enclosure Protection	IP69K/IP67
Operating Temperature	-25C to 55C
Vibration	IEC 68-2-6, 10-55Hz+1Hz Excursion: 0.35mm, 1 octave/min
Conduit Entry	Various (see Sales Part Numbers)
Fixing	4 x M5

Information with regard to UL 508:
Type 1 Enclosures.
Intended for same polarity use and one polymeric conduit connection.
Electrical Rating: A300. 48W5.
Max. Switching Current / Volt / Amp:
120V. 6A. (720VA break) PF 0.38
240V. 3A. (720VA break) PF 0.38

Actuator insertion (mm)

	6.0	5.0	0mm
11/12	Open		
21/22	Open		
33/34			Open
43/44		Open	

KL4-SS REQUEST BUTTON VERSION: (MOMENTARY ACTION)

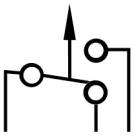

Wire colours (NC/NO):
Black = common
Brown = NC
Blue = NO

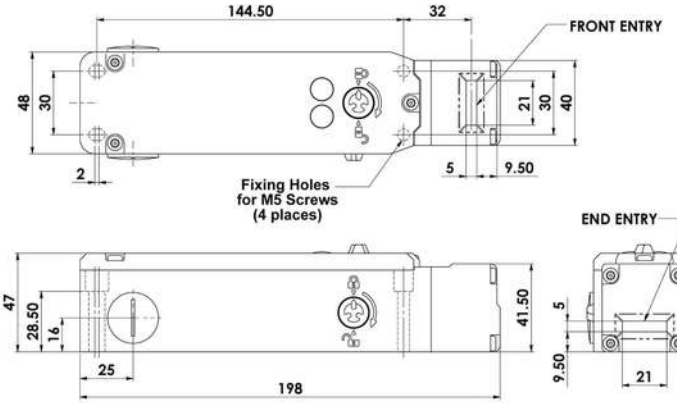

Dimensions (mm)

Quick Connect (QC) M23 12 way Male Plug (Pin view from switch)	Switch Circuit
1 3	A1 A2
4 6	11/12
7 8	21/22
2	Request button (Common) (Black wire)
5	Request button (NO) (Blue wire)
10	33
11	34
12	Earth

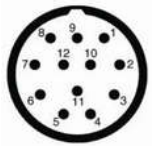

Notes: (1) Pins 10 and 11 can be internally re-wired for use with circuit 43/44.
(2) Request button NC (Brown wire) can be internally re-wired in place of the NO (Blue wire).

IDEM SAFETY SWITCHES Ltd., 2 Ormside Close, Hindley Industrial Estate, Hindley Green, Wigan, WN2 4HR UK. Tel: +44 (0)1942 257070 Fax.: +44 (0)1942 257076
IDEM (USA) 4075 Papazian Way, Suite 105, Fremont, CA 94538 Tel:510-445-0751 Fax:1866-431-7064 email: sales@idemsafety.com Web: www.idemsafety.com

Doc: 102544
Dec. 2013