JUMO GmbH & Co. KG
Delivery address: Mackenrodtstraße 14
36039 Fulda, Germany
Postal address: 36035 Fulda, Germany
Phone: +49 661 6003-0
Fax: +49 661 6003-607
Email: mail@jumo.net
Internet: www.jumo.net

JUMO Instrument Co. Ltd.
JUMO House
Temple Bank, Riverway
Harlow, Essex, CM20 2DY, UK
Phone: +44 1279 63 55 33
Fax: +44 1279 62 50 29
Email: sales@jumo.co.uk
Internet: www.jumo.co.uk

JUMO Process Control, Inc.
6724 Joy Road
East Syracuse, NY 13057, USA
Phone: +1 315 437 5866
Fax: +1 315 437 5860
Email: info.us@jumo.net
Internet: www.jumousa.com

Surface-mounting double thermostat ATH

Particularities

- Self-monitoring (STB/STW [STB]) and Safety cut-out (STB/STW [STB]) in the event of a pressure drop
- Version according to DIN EN 14597 and to Pressure Equipment Directive 2014/68/EU
- Protection type IP54
- Measuring range -50[1] to +500 °C



ATHs-12 (Type 603026/0102-1-...)



ATHf-170 (Type 603026/0170-2-...)

Brief description

Thermostats are used to control and monitor thermal processes. ATH surface-mounting double thermostats consist of two separate measuring and switching systems.

The devices are available as temperature controllers TR, temperature monitors TW, safety temperature monitors STW (STB) and safety temperature limiters STB. In the event of a malfunction, the STB switches the monitored machine line to an operationally safe status.

Surface-mounting double thermostats operate according to the fluid expansion principle, a microswitch serves as an electrical switching element.

Switching function

Temperature controller TR and temperature monitor TW
If the temperature on the temperature probe exceeds the setpoint value, the electrical circuit is opened or closed by a microswitch. If the temperature falls below the selected setpoint value (by the switching differential), the microswitch is reset to its initial position..

Restart lock at safety temperature limiter STB
If the temperature at the temperature sensor exceeds the set limit value, the electrical circuit is opened and the microswitch is mechanically locked. After falling below the limit value by approx. 10 % of the temperature range (approx. 15 % of the limit value setting > +350 °C), the switch can be unlocked manually.

Use of the safety temperature monitor STW (STB) as safety temperature limiter STB
In this case, the circuit following the thermostat must comply with DIN EN 14597 and VDE 0116.

Self-monitoring for safety temperature limiter STB and safety temperature monitor STW (STB)
If the measuring system is destroyed (i.e. if the expansion fluid escapes) the pressure in the membrane of the STB and STW (STB) drops and permanently opens the electrical circuit. Unlocking is then no longer possible. When the STW (STB) and STB sensors cools down to the negative temperature range, the circuit opens, but must be manually unlocked by the reclosing button when the temperature rises. The STW (STB) automatically restarts.

[1] upon request

Approvals and approval marks (see Technical Data)

JUMO GmbH & Co. KG
Delivery address: Mackenrodtstraße 14
36039 Fulda, Germany
Postal address: 36035 Fulda, Germany
Phone: +49 661 6003-0
Fax: +49 661 6003-607
Email: mail@jumo.net
Internet: www.jumo.net

JUMO Instrument Co. Ltd.
JUMO House
Temple Bank, Riverway
Harlow, Essex, CM20 2DY, UK
Phone: +44 1279 63 55 33
Fax: +44 1279 62 50 29
Email: sales@jumo.co.uk
Internet: www.jumo.co.uk

JUMO Process Control, Inc.
6724 Joy Road
East Syracuse, NY 13057, USA
Phone: +1 315 437 5866
Fax: +1 315 437 5860
Email: info.us@jumo.net
Internet: www.jumousa.com

Technical data

Control ranges and temperature probes

	Fluid-filled			
Switching function	Control/limit value ranges °C	Max. admissible probe temperature °C	Max. capillary length mm	Probe length, dimension "L" Probe Ø "d" = 6 mm[a] mm
TR, TW	-20 to +50	60	5,000	141
	-10 to +40	50		185
	0 to 50	60		185
	0 to 100	125		107
	20 to 90	115		138
	20 to 120	140		106
	20 to 150	175		88
	30 to 110	135		125
	50 to 200	230		101
	50 to 250	290		73
	50 to 300	345		63
	50 to 350	405		53
	60 to 130	150		135
STW (STB) and STB	20 to 150	175	5,000	77
	30 to 110	135		108
	50 to 250	290		64
	50 to 300	345		55
	60 to 130	150		116
	Gas-filled			
TR, TW	20 to 400	460	1,000	278
	20 to 500	575	2,000	148
	20 to 500	575	4,000	202
STW (STB) and STB	20 to 400	460	1,000	176
	20 to 500	575	2,000	127
	20 to 500	575	4,000	202

[a] Standard

Capillary and temperature probe

Type	Scale limit value	Capillary	Temperature probe
ATH.-..	up to 200 °C	Copper (Cu), Ø 1.5mm, material no. Cu-DHP	Copper (Cu), material no. Cu-DHP, hard soldered
	up to 350 °C	Copper (Cu), Ø 1.5mm material no. Cu-DHP	Stainless steel (CrNi), material no. 1.4571, hard soldered
	up to 500 °C	Stainless steel (CrNi), Ø 1.5mm	Stainless steel (CrNi), material no. 1.4571, welded
	up to 350 °C	Stainless steel (CrNi), Ø 1.5mm	Stainless steel (CrNi), material no. 1.4571, welded (extra cost)
Capillary length	1,000 mm, max. 5,000 mm as standard		
Minimum bending radius of capillary	5 mm		

JUMO GmbH & Co. KG
Delivery address: Mackenrodtstraße 14
36039 Fulda, Germany
Postal address: 36035 Fulda, Germany
Phone: +49 661 6003-0
Fax: +49 661 6003-607
Email: mail@jumo.net
Internet: www.jumo.net

JUMO Instrument Co. Ltd.
JUMO House
Temple Bank, Riverway
Harlow, Essex, CM20 2DY, UK
Phone: +44 1279 63 55 33
Fax: +44 1279 62 50 29
Email: sales@jumo.co.uk
Internet: www.jumo.co.uk

JUMO Process Control, Inc.
6724 Joy Road
East Syracuse, NY 13057, USA
Phone: +1 315 437 5866
Fax: +1 315 437 5860
Email: info.us@jumo.net
Internet: www.jumousa.com

Electrical data

Switching function	TR, TW, STW (STB) Microswitch with changeover contact	STB (-70) Microswitch with NC contact and restart lock	STB (-70/574) Microswitch with NC contact, restart lock and additional signal contact
Max. contact rating	AC 230 V +10 %, 10 (2)[a] A, cos φ = 1 (0.6)[a], DC 230 V +10 %, 0.25 A		
with switching differential 1.5 % and 2 %	AC 230 V +10 %, 6 (1.2)[a] A, cos φ = 1 (0.6)[a]	-	-
	Microswith with gold-plated contacts, extra code 702 (only with switching differential 3 %, 5 %, and 7 %), AC/DC 24 V, 0.1 A, contact resistance 2.5 to 10 mΩ		

Contact reliability	To ensure high switching reliability, we recommend a minimum load of:
with silver contacts	AC/DC = 24 V, 100 mA
with gold-plated contacts (extra code 702)	AC/DC = 10 V, 5 mA

[a] inductive load

Environmental influences

Switching difference in % of the control/limit value range	Rated value	Poss. actual value	Rated value	Poss. actual value	
	Fluid-filled		Gas-filled		
Switching function TR, TW	3	3 max. 4	5	4 max. 8	standard
	6	6 max. 8	9	8 max. 12	upon request
	1.5	1 max. 2	2	1.5 max. 2.5	extra cost
	Fluid-filled		Gas-filled		
Switching function STW (STB)	5	4 max. 6	7	5 max. 12	standard
	9	8 max. 11	9	8 max. 16	upon request
	2	1 max. 3	2	1.5 max. 3	extra cost

Switching point accuracy in % of the control/limit value range	
Switching function TR, TW	In the upper third of the scale ± 1.5 %, at scale beginning ± 6 %
Switching function STB, STW (STB)	In the upper third of the scale +0/-5 %, at scale beginning +0/-10 %

Ambient temperature influence	Based on the control/limit value range When the ambient temperature on the case deviates from the calibration ambient temperature 22 °C, a switch point offset occurs. Higher ambient temperatures = lower switching point Lower ambient temperature = higher switching point					
Surface-mounted double thermostat with scale limit value	< 200 °C		÷ 200 °C ≤ 350 °C		> 350 °C ≤ 500 °C	
Switching function	TR/TW	STB/STW (STB)	TR/TW	STB/STW (STB)	TR/TW	STB/STW (STB)
Influence on the switch head	0.08 %/K	0.17 %/K	0.06 %/K	0.13 %/K	0.14 %/K	0.12 %/K
Influence on the capillary per metre	0.047 %/K	0.054 %/K	0.09 %/K	0.11 %/K	0.04 %/K	0.03 %/K
Admissible storage temperature	-50 to +80 °C or up to max. permissible ambient temperature (see nameplate)					
Admissible ambient temperature during use	See nameplate					
Rated position	Ss per DIN 16257, NL 0 to NL 90 (different rated positions (NL) on request)					

JUMO GmbH & Co. KG
Delivery address: Mackenrodtstraße 14
36039 Fulda, Germany
Postal address: 36035 Fulda, Germany
Phone: +49 661 6003-0
Fax: +49 661 6003-607
Email: mail@jumo.net
Internet: www.jumo.net

JUMO Instrument Co. Ltd.
JUMO House
Temple Bank, Riverway
Harlow, Essex, CM20 2DY, UK
Phone: +44 1279 63 55 33
Fax: +44 1279 62 50 29
Email: sales@jumo.co.uk
Internet: www.jumo.co.uk

JUMO Process Control, Inc.
6724 Joy Road
East Syracuse, NY 13057, USA
Phone: +1 315 437 5866
Fax: +1 315 437 5860
Email: info.us@jumo.net
Internet: www.jumousa.com

Housing

Material	
Case lid	Polycarbonate, shock resistant, color: pepple gray RAL 7032; Extra code "701": aluminium die casting, painted, color: pepple gray RAL 7032
Case bottom section	Aluminum die casting, painted, color: anthracite-gray RAL 7015
Set point value setting	
Switching function TR	Switching point adjustable from the outside using the rotary knob
Switching function TW, TB, STB, STW (STB)	Switching point can be adjusted with a screwdriver once the case lid has been removed.
Protection type	IP54 according to DIN EN 60529
Cable inlet	Self-sealing grommet M20 × 1.5, sealing range 8 to 10 mm (standard)
Weight	Approx. 800 g
Switch head fastening Type ATHf with capillary	
Standard	Screw connection by means of counter nut M18 × 1 on the case stud, capillary outlet on the case stud
Extra code 248	Wall stands
Extra code 711	With 2 screws through the case bottom part, lateral capillary outlet on the case, lid and bottom part made of plastic
Extra code 746	Fastening flange made of steel sheet, capillary outlet on the case stud

Process connection

Type ATHs with rigid shaft	
Scale limit value up to 150 °C	Process connection 20: Screw-in sleeve with screw-in spigot G 1/2″, form A, as per DIN 3852/2
Scale limit value exceeding 150 °C	Process connection 30: Screw-in sleeve with screw-in spigot G 1/2″, form A, as per DIN 3852/2, and intermediate piece, to ensure that the max. admissible ambient temperature is not exceeded on the case
Type ATHf with capillary	Process connection 10: Plain cylindrical probe (standard) Process connection 20: Screw-in thermowell (upon request) Screw-in sleeve with screw-in spigot G 1/2″, form A, as per DIN 3852/2, and clamping piece with fixing screw to lock the probe
Material	
Process connection 20	
Up to 150 °C	CuZn (standard)
Exceeding 150 °C	CrNi
Process connection 30	
Exceeding 150 °C	CrNi (standard)
Fitting length	Standard lengths: 100, 120, 150, 200 or 300 mm (different lengths upon request)
Immersion tube Ø	D = 15 mm

⇨ For different process connections and thermowells refer to data sheet 606710.

JUMO GmbH & Co. KG
Delivery address: Mackenrodtstraße 14
36039 Fulda, Germany
Postal address: 36035 Fulda, Germany
Phone: +49 661 6003-0
Fax: +49 661 6003-607
Email: mail@jumo.net
Internet: www.jumo.net

JUMO Instrument Co. Ltd.
JUMO House
Temple Bank, Riverway
Harlow, Essex, CM20 2DY, UK
Phone: +44 1279 63 55 33
Fax: +44 1279 62 50 29
Email: sales@jumo.co.uk
Internet: www.jumo.co.uk

JUMO Process Control, Inc.
6724 Joy Road
East Syracuse, NY 13057, USA
Phone: +1 315 437 5866
Fax: +1 315 437 5860
Email: info.us@jumo.net
Internet: www.jumousa.com

Approvals and approval marks

DIN	
Testing agency	DIN CERTCO/TÜV Süd
Certificates/certification number	TR/TR896
Inspection basis	DIN EN 14597
Valid for	ATH.-11 (Type 603026/0101 [TR/TR])
DIN	
Testing agency	DIN CERTCO/TÜV Süd
Certificates/certification number	TR/TW897
Inspection basis	DIN EN 14597
Valid for	ATH.-12 (Type 603026/0102 [TR/TW])
DIN	
Testing agency	DIN CERTCO/TÜV Süd
Certificates/certification number	TW/TW901
Inspection basis	DIN EN 14597
Valid for	ATH.-22 (Type 603026/0202 [TW/TW])
DIN	
Testing agency	DIN CERTCO/TÜV Süd
Certificates/certification number	TR/STW(STB)899S
Inspection basis	DIN EN 14597
Valid for	ATH.-120 (Type 603026/0120 [TR/STW (STB)])
DIN	
Testing agency	DIN CERTCO/TÜV Süd
Certificates/certification number	TR/STB900
Inspection basis	DIN EN 14597
Valid for	ATH.-170 (Type 603026/0170 [TR/STB])
DIN	
Testing agency	DIN CERTCO/TÜV Süd
Certificates/certification number	TW/STW(STB)903S
Inspection basis	DIN EN 14597
Valid for	ATH.-220 (Type 603026/0220 [TW/STW (STB)])
DIN	
Testing agency	DIN CERTCO/TÜV Süd
Certificates/certification number	TW/STB904
Inspection basis	DIN EN 14597
Valid for	ATH.-270 (Type 603026/0270 [TW/STB])
DIN	
Testing agency	DIN CERTCO/TÜV Süd
Certificates/certification number	2xSTW(STB)905S
Inspection basis	DIN EN 14597
Valid for	ATH.-2020 (Type 603026/2020 [STW (STB)/STW (STB)])
DIN	
Testing agency	DIN CERTCO/TÜV Süd
Certificates/certification number	STW(STB)/STB906S
Inspection basis	DIN EN 14597
Valid for	ATH.-2070 (Type 603026/2070 [STW (STB)/STB)])
DIN	
Testing agency	DIN CERTCO/TÜV Süd
Certificates/certification number	STB/STB907
Inspection basis	DIN EN 14597
Valid for	ATH.-7070 (Type 603026/7070 [STB/STB])

JUMO GmbH & Co. KG
Delivery address: Mackenrodtstraße 14
36039 Fulda, Germany
Postal address: 36035 Fulda, Germany
Phone: +49 661 6003-0
Fax: +49 661 6003-607
Email: mail@jumo.net
Internet: www.jumo.net

JUMO Instrument Co. Ltd.
JUMO House
Temple Bank, Riverway
Harlow, Essex, CM20 2DY, UK
Phone: +44 1279 63 55 33
Fax: +44 1279 62 50 29
Email: sales@jumo.co.uk
Internet: www.jumo.co.uk

JUMO Process Control, Inc.
6724 Joy Road
East Syracuse, NY 13057, USA
Phone: +1 315 437 5866
Fax: +1 315 437 5860
Email: info.us@jumo.net
Internet: www.jumousa.com

DGRL	
Testing agency	TÜV Süd
Certificates/certification number	Z-IS-TAF-MUC-17-11-2652099-021
Inspection basis	2014/68/EU, DIN EN 14597
Valid for	ATH.-120 (Type 603026/0120 [TR/STW (STB)]), ATH.-170 (Type 603026/0170 [TR/STB]), ATH.-220 (Type 603026/0220 [TW/STW (STB)]), ATH.-270 (Type 603026/0270 [TW/STB]), ATH.-2020 (Type 603026/2020 [STW (STB)/STW (STB)]), ATH.-2070 (Type 603026/2070 [STW (STB)/STB]), ATH.-7070 (Type 603026/7070 [STB/STB])
EAC[a]	
Testing agency	GOST Norm AG
Certificates/certification number	0198420
Inspection basis	TR ZU 004/2011 (LVD)
Valid for	ATH (Type 603026)

[a] Russian documentation upon request

JUMO GmbH & Co. KG
Delivery address: Mackenrodtstraße 14
36039 Fulda, Germany
Postal address: 36035 Fulda, Germany
Phone: +49 661 6003-0
Fax: +49 661 6003-607
Email: mail@jumo.net
Internet: www.jumo.net

JUMO Instrument Co. Ltd.
JUMO House
Temple Bank, Riverway
Harlow, Essex, CM20 2DY, UK
Phone: +44 1279 63 55 33
Fax: +44 1279 62 50 29
Email: sales@jumo.co.uk
Internet: www.jumo.co.uk

JUMO Process Control, Inc.
6724 Joy Road
East Syracuse, NY 13057, USA
Phone: +1 315 437 5866
Fax: +1 315 437 5860
Email: info.us@jumo.net
Internet: www.jumousa.com

Dimensions

Versions with rigid shaft

Process connection 20: Screw-in thermowell

ATHs-11 (Type 603026/0101)

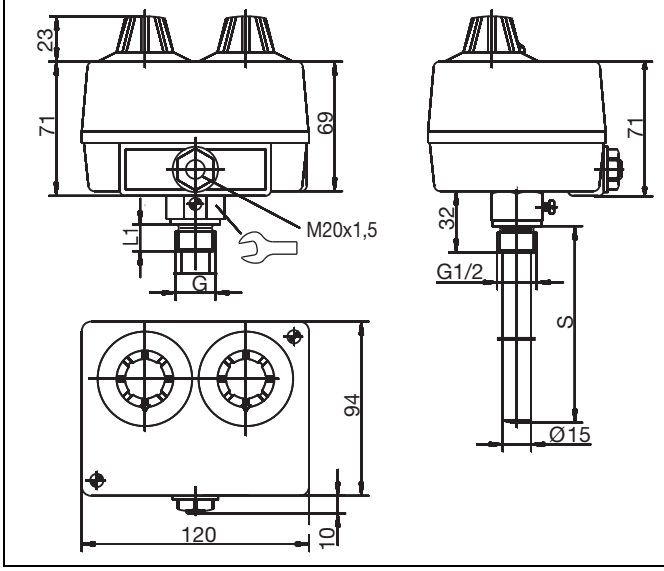

ATHs-12 (Type 603026/0102),
ATHs-120 (Type 603026/0120)

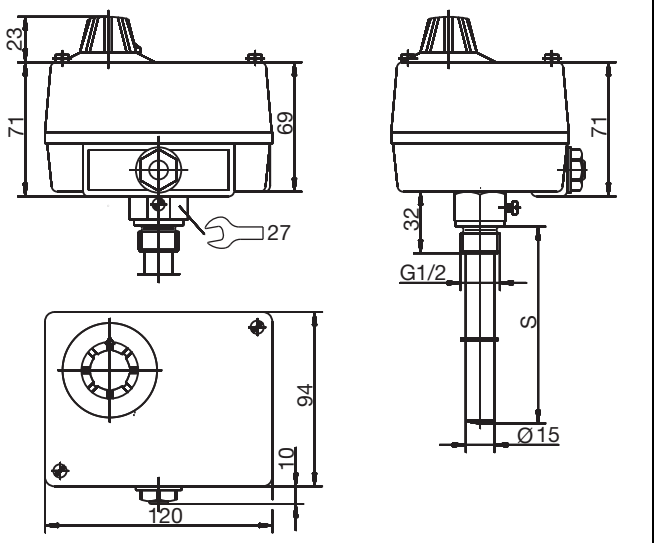

ATHs-22 (Type 603026/0202),
ATHs-2020 (Type 603026/2020)

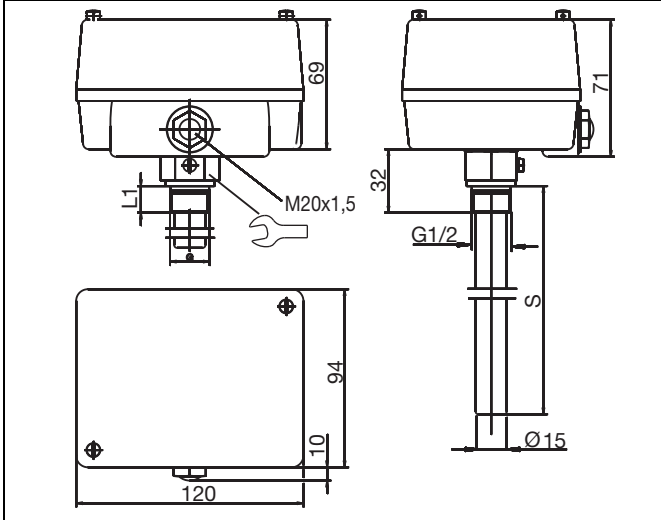

ATHs-170 (Type 603026/0170),
ATHS-170-.../574 (Type 603026/0170-.../574)

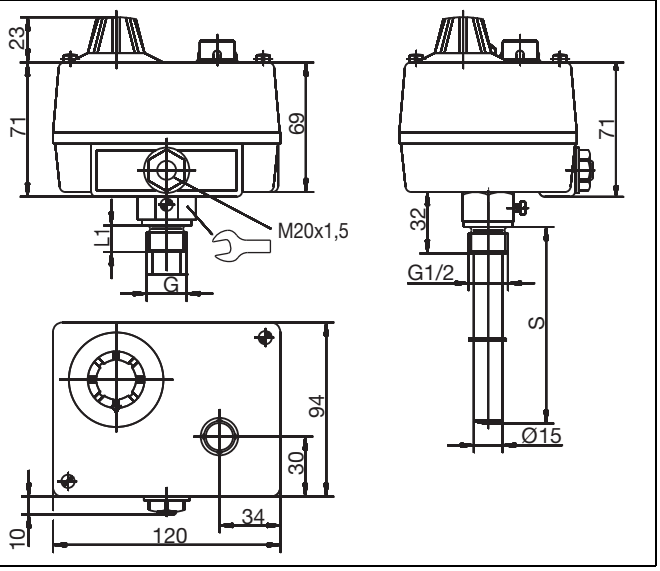

JUMO GmbH & Co. KG
Delivery address: Mackenrodtstraße 14
36039 Fulda, Germany
Postal address: 36035 Fulda, Germany
Phone: +49 661 6003-0
Fax: +49 661 6003-607
Email: mail@jumo.net
Internet: www.jumo.net

JUMO Instrument Co. Ltd.
JUMO House
Temple Bank, Riverway
Harlow, Essex, CM20 2DY, UK
Phone: +44 1279 63 55 33
Fax: +44 1279 62 50 29
Email: sales@jumo.co.uk
Internet: www.jumo.co.uk

JUMO Process Control, Inc.
6724 Joy Road
East Syracuse, NY 13057, USA
Phone: +1 315 437 5866
Fax: +1 315 437 5860
Email: info.us@jumo.net
Internet: www.jumousa.com

ATHs-270 (Type 603026/0270), ATHs-270-.../574 (Type 603026/0270-.../574), ATHs-2070 (Type 603026/2070), ATHs-2070-.../574 (Type 603026/2070-...-574)	ATHs-7070 (Type 603026/7070), ATHs-7070-.../574 (Type 603026/7070-.../574)
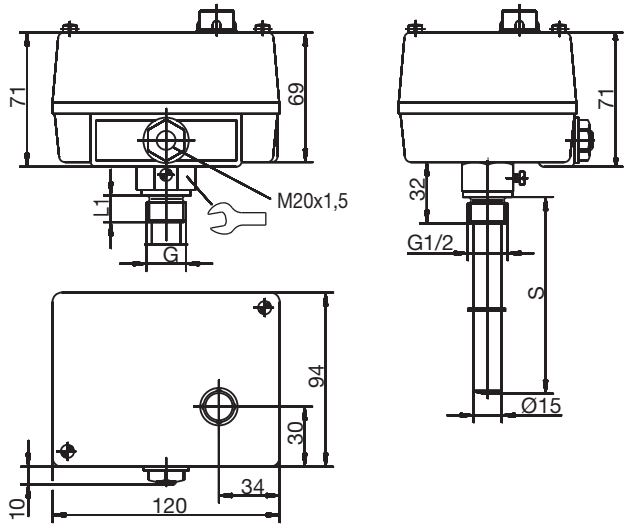	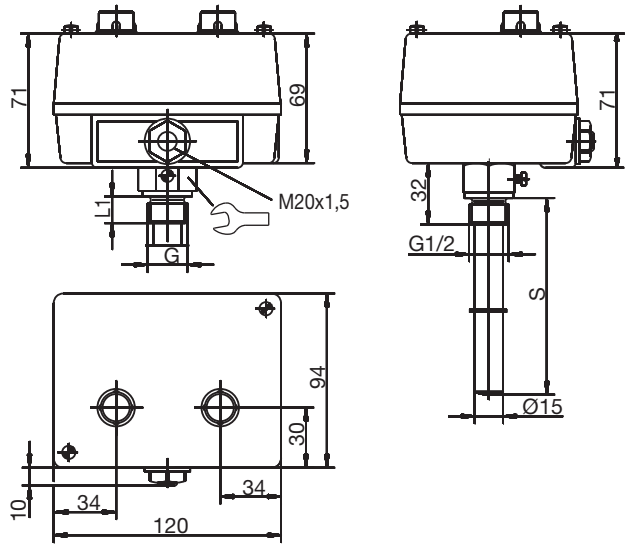

Process connection 30: Screw-in thermowell with intermediate piece (from 150 °C)

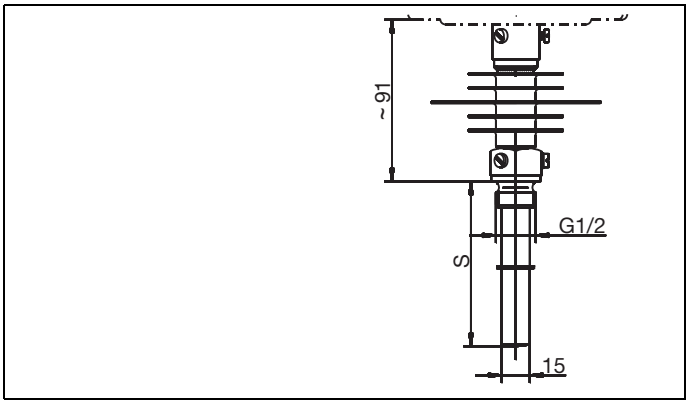

JUMO GmbH & Co. KG
Delivery address: Mackenrodtstraße 14
36039 Fulda, Germany
Postal address: 36035 Fulda, Germany
Phone: +49 661 6003-0
Fax: +49 661 6003-607
Email: mail@jumo.net
Internet: www.jumo.net

JUMO Instrument Co. Ltd.
JUMO House
Temple Bank, Riverway
Harlow, Essex, CM20 2DY, UK
Phone: +44 1279 63 55 33
Fax: +44 1279 62 50 29
Email: sales@jumo.co.uk
Internet: www.jumo.co.uk

JUMO Process Control, Inc.
6724 Joy Road
East Syracuse, NY 13057, USA
Phone: +1 315 437 5866
Fax: +1 315 437 5860
Email: info.us@jumo.net
Internet: www.jumousa.com

Versions with capillary

Process connection 10: Plain cylindrical probe

ATHf-11 (Type 603026/0101)

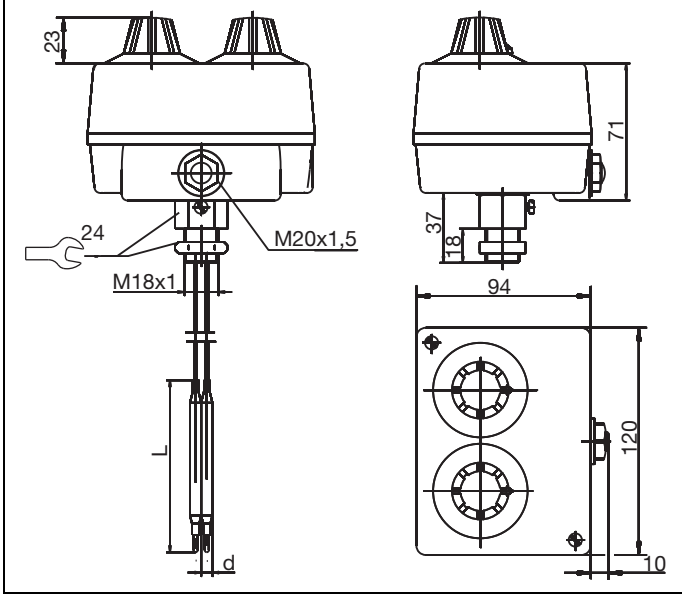

ATHf-12 (Type 603026/0102),
ATHf-120 (Type 603026/0120)

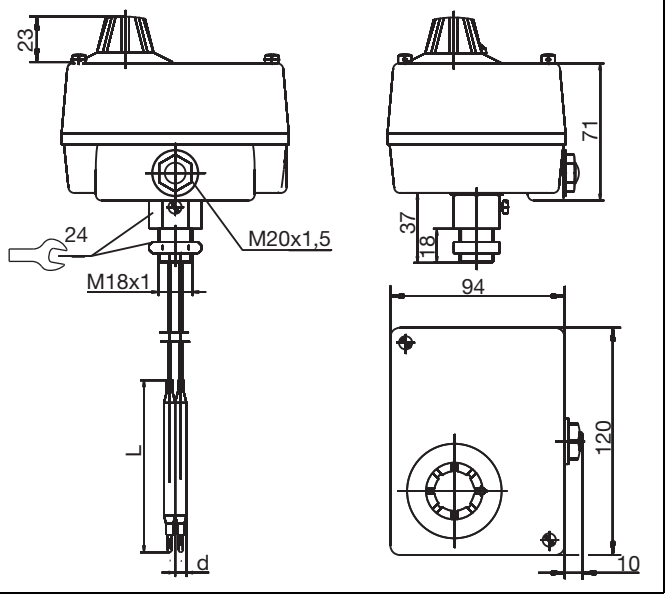

ATHf-22 (Type 603026/0202),
ATHf-2020 (Type 603026/2020)

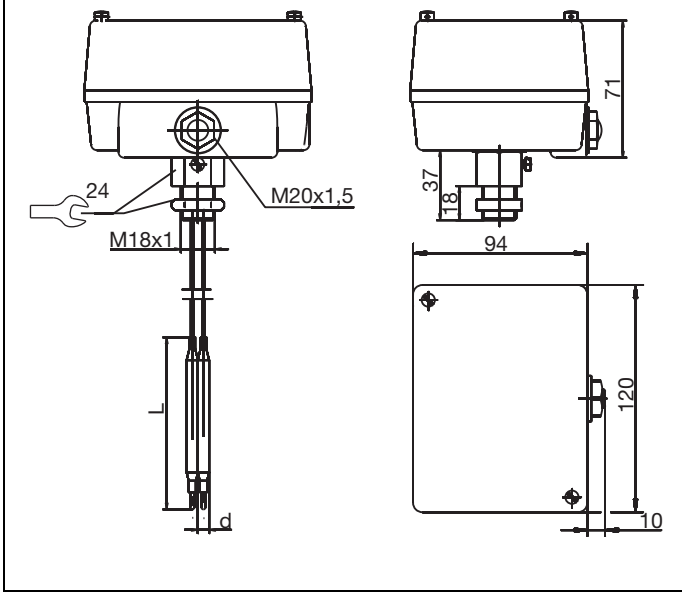

ATHf-170 (Type 603026/0170),
ATHf-170-.../574 (Type 603026/0170-.../574)

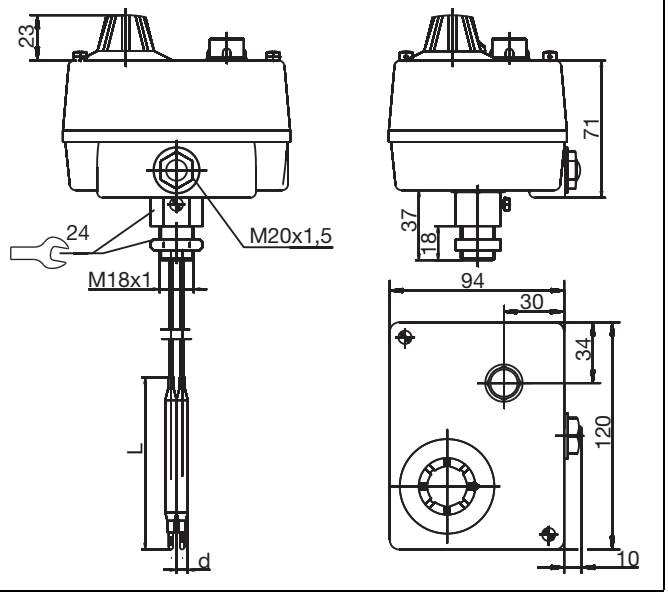

JUMO GmbH & Co. KG
Delivery address: Mackenrodtstraße 14
36039 Fulda, Germany
Postal address: 36035 Fulda, Germany
Phone: +49 661 6003-0
Fax: +49 661 6003-607
Email: mail@jumo.net
Internet: www.jumo.net

JUMO Instrument Co. Ltd.
JUMO House
Temple Bank, Riverway
Harlow, Essex, CM20 2DY, UK
Phone: +44 1279 63 55 33
Fax: +44 1279 62 50 29
Email: sales@jumo.co.uk
Internet: www.jumo.co.uk

JUMO Process Control, Inc.
6724 Joy Road
East Syracuse, NY 13057, USA
Phone: +1 315 437 5866
Fax: +1 315 437 5860
Email: info.us@jumo.net
Internet: www.jumousa.com

ATHf-270 (Type 603026/0270), ATHf-270-.../574 (Type 603026/0270-.../574), ATHf-2070 (Type 603026/2070), ATHf-2070-.../574 (Type 603026/2070-.../574)	ATHf-7070 (Type 603026/7070), ATHf-7070-.../574 (Type 603026/7070-.../574)
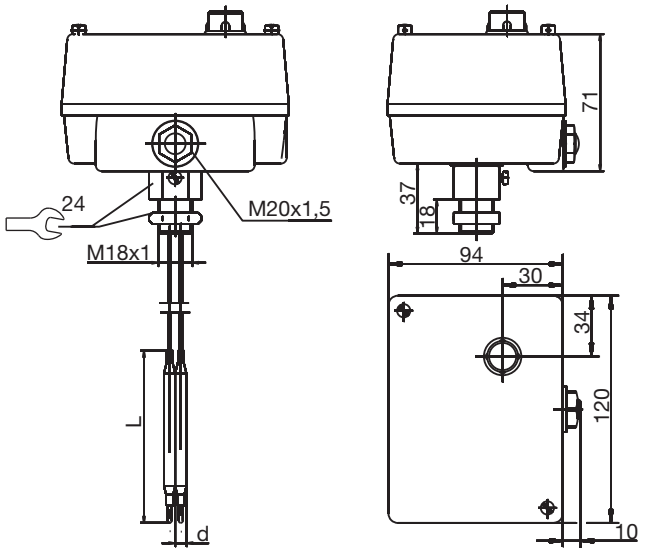	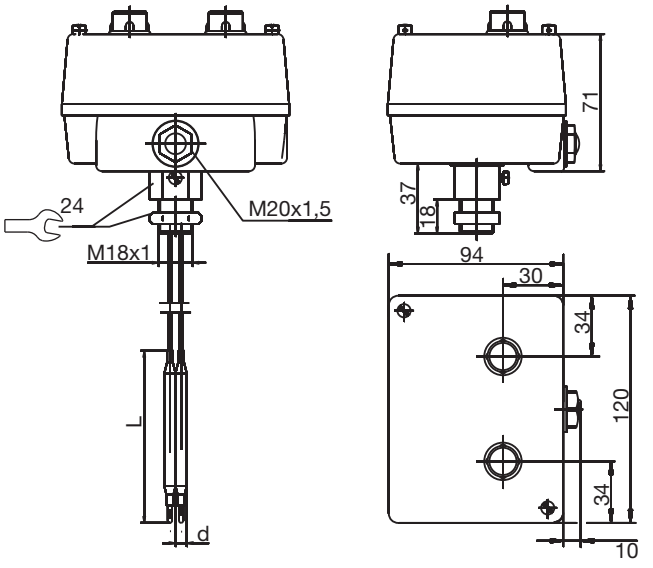

JUMO GmbH & Co. KG
Delivery address: Mackenrodtstraße 14
36039 Fulda, Germany
Postal address: 36035 Fulda, Germany
Phone: +49 661 6003-0
Fax: +49 661 6003-607
Email: mail@jumo.net
Internet: www.jumo.net

JUMO Instrument Co. Ltd.
JUMO House
Temple Bank, Riverway
Harlow, Essex, CM20 2DY, UK
Phone: +44 1279 63 55 33
Fax: +44 1279 62 50 29
Email: sales@jumo.co.uk
Internet: www.jumo.co.uk

JUMO Process Control, Inc.
6724 Joy Road
East Syracuse, NY 13057, USA
Phone: +1 315 437 5866
Fax: +1 315 437 5860
Email: info.us@jumo.net
Internet: www.jumousa.com

Connection diagram

The connection elements in the data sheet provide information on product selection.

For the electrical connection, only use the installation instructions or the operating manual.

Type	System	Switching function	
Type 603026/0101 (ATH-11), Type 603026/0102 (ATH-12), Type 603026/0120 (ATH-120), Type 603026/0202 (ATH-22), Type 603026/0220 (ATH-220), Type 603026/2020 (ATH-2020)	System I and System II: with changeover contact	TR, TW, STW (STB)	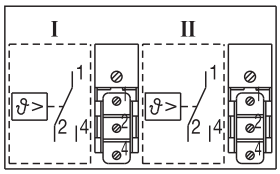
Type 603026/7070 (ATH-7070)	System I and System II: with NC contact and restart lock	STB	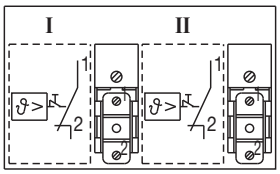
Type 603026/0170-.../574 (ATH-170/574), Type 603026/0270-.../574 (ATH-270/574), Type 603026/2070-.../574 (ATH-2070/574)	System I: with changeover contact	TR, TW, STW (STB)	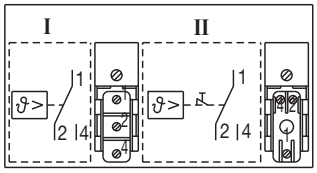
	System II: with NC contact, restart lock and additional signal contact		
Type 603026/7070-.../574 (ATH-7070/574)	System I and System II: with NC contact, restart lock and additional signal contact	STB	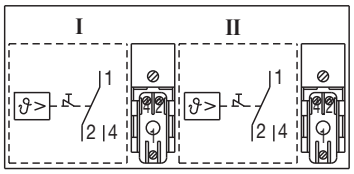
Type 603026/0170 (ATH-170), Type 603026/0270 (ATH-270), Type 603026/2070 (ATH-2070)	System I: with changeover contact	TR, TW, STW (STB)	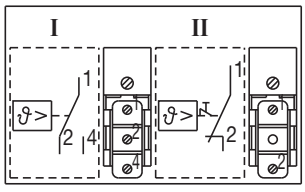
	System II: with NC contact and restart lock	STB	

JUMO GmbH & Co. KG
Delivery address: Mackenrodtstraße 14
36039 Fulda, Germany
Postal address: 36035 Fulda, Germany
Phone: +49 661 6003-0
Fax: +49 661 6003-607
Email: mail@jumo.net
Internet: www.jumo.net

JUMO Instrument Co. Ltd.
JUMO House
Temple Bank, Riverway
Harlow, Essex, CM20 2DY, UK
Phone: +44 1279 63 55 33
Fax: +44 1279 62 50 29
Email: sales@jumo.co.uk
Internet: www.jumo.co.uk

JUMO Process Control, Inc.
6724 Joy Road
East Syracuse, NY 13057, USA
Phone: +1 315 437 5866
Fax: +1 315 437 5860
Email: info.us@jumo.net
Internet: www.jumousa.com

Order details

	(1)	**Basic type**	
603026		Surface-mounting double thermostat ATH	
	(2)	**Basic type extension**	
0101		ATH.-11	Temperature controller/temperature controller (TR/TR)
0102		ATH.-12	Temperature controller/temperature monitor (TR/TW)
0120		ATH.-120	Temperature controller/safety temperature monitor (TR/STW (STB))
0170		ATH.-170	Temperature controller/safety temperature controller (TR/STB)
0202		ATH.-22	Temperature monitor/temperature monitor (TW/TW)
0220		ATH.-220	Temperature monitor/safety temperature monitor (TW/STW (STB))
0270		ATH.-270	Temperature monitor/safety temperature limiter (TW/STB)
2020		ATH.-2020	Safety temperature monitor/safety temperature monitor (STW (STB)/STW (STB))
2070		ATH.-2070	Safety temperature monitor/safety temperature limiter (STW (STB)/STB)
7070		ATH.-7070	Safety temperature limiter/safety temperature limiter (STB/STB)
	(3)	**Design**	
1		Rigid shaft	
2		Capillary	
	(4)	**Control range**	
014		-20 to +50 °C	
016		-10 to +40 °C	
021		0 to 50 °C	
025		0 to 100 °C	
041		20 to 90 °C	
042		20 to 120 °C	
043		20 to 150 °C	
045		20 to 400 °C	
046		20 to 500 °C	
052		30 to 110 °C	
062		50 to 200 °C	
063		50 to 250 °C	
064		50 to 300 °C	
066		60 to 130 °C	
	(5)	**Limit value range (STB)**	
014		-20 to +50 °C	
016		-10 to +40 °C	
021		0 to 50 °C	
025		0 to 100 °C	
041		20 to 90 °C	
042		20 to 120 °C	
043		20 to 150 °C	
045		20 to 400 °C	
046		20 to 500 °C	
052		30 to 110 °C	
062		50 to 200 °C	
063		50 to 250 °C	
064		50 to 300 °C	
066		60 to 130 °C	

JUMO GmbH & Co. KG
Delivery address: Mackenrodtstraße 14
36039 Fulda, Germany
Postal address: 36035 Fulda, Germany
Phone: +49 661 6003-0
Fax: +49 661 6003-607
Email: mail@jumo.net
Internet: www.jumo.net

JUMO Instrument Co. Ltd.
JUMO House
Temple Bank, Riverway
Harlow, Essex, CM20 2DY, UK
Phone: +44 1279 63 55 33
Fax: +44 1279 62 50 29
Email: sales@jumo.co.uk
Internet: www.jumo.co.uk

JUMO Process Control, Inc.
6724 Joy Road
East Syracuse, NY 13057, USA
Phone: +1 315 437 5866
Fax: +1 315 437 5860
Email: info.us@jumo.net
Internet: www.jumousa.com

	(6)	**Switching differential 1**
00		None
15		1.5 %
20		2 %
30		3 %
50		5 %
60		6 %
70		7 %
90		9 %
	(7)	**Switching differential 2**
00		None
15		1.5 %
20		2 %
30		3 %
50		5 %
60		6 %
70		7 %
90		9 %
	(8)	**Capillary length 1**
0		None
1000		1000 mm
2000		2000 mm
3000		3000 mm
4000		4000 mm
5000		5000 mm
	(9)	**Capillary length 2**
0		None
1000		1000 mm
2000		2000 mm
3000		3000 mm
4000		4000 mm
5000		5000 mm
	(10)	**Capillary material 1**
00		None
20		CrNi (stainless steel)
40		Cu (copper)
	(11)	**Capillary material 2**
00		None
20		CrNi (stainless steel)
40		Cu (copper)
	(12)	**Process connection**
10		Plain cylindrical probe 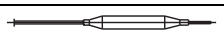
20		Screw-in thermowell 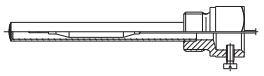
30		Screw-in thermowell with intermediate piece 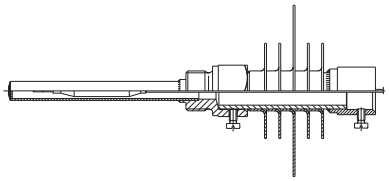

JUMO GmbH & Co. KG
Delivery address: Mackenrodtstraße 14
36039 Fulda, Germany
Postal address: 36035 Fulda, Germany
Phone: +49 661 6003-0
Fax: +49 661 6003-607
Email: mail@jumo.net
Internet: www.jumo.net

JUMO Instrument Co. Ltd.
JUMO House
Temple Bank, Riverway
Harlow, Essex, CM20 2DY, UK
Phone: +44 1279 63 55 33
Fax: +44 1279 62 50 29
Email: sales@jumo.co.uk
Internet: www.jumo.co.uk

JUMO Process Control, Inc.
6724 Joy Road
East Syracuse, NY 13057, USA
Phone: +1 315 437 5866
Fax: +1 315 437 5860
Email: info.us@jumo.net
Internet: www.jumousa.com

	(13)	**Thread of process connection**
00		None
13		G 1/2″
	(14)	**Material of process connection**
00		None
20		CrNi (stainless steel)
46		CuZn (brass)
	(15)	**Insertion length**
000		Without thermowell (ATHf-...)
100		100 mm
120		120 mm
150		150 mm
200		200 mm
300		300 mm
	(16)	**Immersion tube diameter**
00		Without thermowell
15		15 mm
	(17)	**Probe diameter**
6		6 mm
	(18)	**Extra codes**
000		None
248		Wall stands
574		Microswitch with changeover contact, restart lock only for STB
701		Case lid made of aluminium die casting
702		Snap-action switch contact, gold-plated (only with switching differential 3 %, 5 %, and 7 %, and STB)
711		Switch head fastening with 2 screws through the case bottom part
764		Fastening flange made of steel sheet

	(1)		(2)		(3)		(4)		(5)		(6)		(7)		(8)		(9)		(10)	
Order code		/		-		-		-		-		-		-		-		-		-
Order example	603026	/	0101	-	1	-	014	-	14	-	00	-	15	-	0	-	1000	-	00	-

	(11)		(12)		(13)		(14)		(15)		(16)		(17)		(18)	
Order code		-		-		-		-		-		-		/		, ...[a]
Order example	20	-	10	-	13	-	00	-	100	-	00	-	6	/	248	,

[a] List extra codes in sequence, separated by commas.

JUMO GmbH & Co. KG
Delivery address: Mackenrodtstraße 14
36039 Fulda, Germany
Postal address: 36035 Fulda, Germany
Phone: +49 661 6003-0
Fax: +49 661 6003-607
Email: mail@jumo.net
Internet: www.jumo.net

JUMO Instrument Co. Ltd.
JUMO House
Temple Bank, Riverway
Harlow, Essex, CM20 2DY, UK
Phone: +44 1279 63 55 33
Fax: +44 1279 62 50 29
Email: sales@jumo.co.uk
Internet: www.jumo.co.uk

JUMO Process Control, Inc.
6724 Joy Road
East Syracuse, NY 13057, USA
Phone: +1 315 437 5866
Fax: +1 315 437 5860
Email: info.us@jumo.net
Internet: www.jumousa.com

Stock versions

Versions with rigid shaft

Type	Control/ limit value range	Switching differential	Process connection	Immersion tube Ø × length mm	Part no.
ATHs-22	0 to 100 °C	3 to 4 %	"20" G 1/2″	15 × 120	60001047
ATHs-22	0 to 100 °C	1.5 %	"20" G 1/2″	15 × 120 CrNi	60001555
ATHs-22	0 to 100 °C	3 to 4 %	"20" G 1/2″	15 × 150	60000205
ATHs-22	0 to 100 °C	3 to 4 %	"20" G 1/2″	15 × 200	60000988
ATHs-22	0 to 100 °C	3 to 4 %	"20" G 1/2″	15 × 300	60000204
ATHs-22	20 to 150	3 to 4 %	"20" G 1/2″	15 × 100	60000489
ATHs-22	50 to 300	3 to 4 %	"30" G 1/2″	15 × 150 CrNi	60003331
ATHs-120	20 to 150	3 to 4 %	"20" G 1/2″	15 × 150	60001479
ATHs-120	20 to 120	3 to 4 %	"20" G 1/2″	15 × 150	60001932
ATHs-170	30 to 110	3 to 4 %	"20" G 1/2″	15 × 150	60000195
ATHs-170	30 to 110	3 to 4 %	"20" G 1/2″	15 × 200	60000196
ATHs-170	20 to 120	3 to 4 %	"20" G 1/2″	15 × 150	60001048
ATHs-170	20 to 150	3 to 4 %	"20" G 1/2″	15 × 150	60000989
ATHs-270	20 to 150	3 to 4 %	"20" G 1/2″	15 × 200	60000194

Versions with capillary

Type	Control/ limit value range	Switching differential	Capillary	Process connection	Probe Ø × length mm	Part no.
ATHf-22	0 to 100 °C	3 to 4 %	1000 mm	„10“ plain cylindrical probe	6 × 107	60001046
ATHf-170	30 to 110 °C	3 to 4 %	1000 mm	„10“ plain cylindrical probe	6 × 125	60001876