Low Voltage Products

Fusegear
Switch fuses OS



Switch fuses 16...1250

DIN
AC23/400V



OS16FD	OS35FD	OS40FD	OS32D	OS63D	OS125D	OS160D	OS200D	OS250D	OS400D
7.5 kW	15 kW	18.5 kW	15 kW	30 kW	55 kW	75 kW	110 kW	140 kW	220 kW

BS
AC23/415V

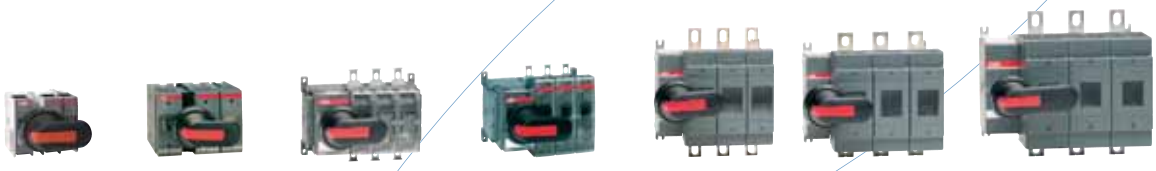

OS20FB	OS32FB	OS32B	OS63B	OS100B	OS125B	OS160B	OS200B	OS250B	OS315B	OS400B
7.5 kW	15 kW	15 kW	30 kW	55 kW	55 kW	75 kW	110 kW	145 kW	180 kW	230 kW

NFC
AC23/400V



OS25FF	OS32FF	OS50F	OS63F	OS100F	OS125F
11 kW	15 kW	22 kW	30 kW	55 kW	55 kW

UL/CSA
480V
600V



OS30FA	OS30C	OS60J OS60C	OS100J OS100C	OS200J	OS400J	OS600J	OS800L
15 HP 20 HP	15 HP 20 HP	30 HP 50 HP	60 HP 75 HP	150 HP 200 HP	250 HP 350 HP	400 HP 500 HP	500 HP 600 HP

Switch fuses
OS 16...1250

Amperes



OS630D
355 kW

OS800D
450 kW

OS1250D
560 kW



OS630B
355 kW

OS800B
450 kW

OS1250B
560 kW





OS1200L

Contents:

Features **4-5**
Technical data **6-11**
Ordering information **12-46**
Front operated switch fuses
DIN-types 12-14
BS-types 15-17
NFC-types 18-19
Neozed, UL- and CSA-types 20-22
Side operated switch fuses
DIN-types 23-24
BS-types 25-26
NFC-type 27
Neozed, UL- and CSA-types 28-29
Accessories
Selection overview 30-31
Optional handles 32-33
Extended shafts 34
Extended shafts and shaft accessories 35
Auxiliary contacts 36-37
Fourth poles, neutral and earth terminals, solid links 38-39
Terminal shrouds 40
Connecting accessories 41-42
Conversion kits 43-44
Blown fuse indicators 45
Locking accessories 46
Dimension drawings **47-63**
Contact functions **64-66**
Index **67-75**

Complete range of switch fuses

From 16 to 1 250 A, 690 V

Features within the range of ABB switch fuses include single pole to four pole versions.

- The switch fuse mechanism located in any position together with the direction of the terminals, increasing the ease of installation and adaptability to different types of cubicle designs.
- A wide selection of accessories improve the usability of the switch fuses; 6 and 8- pole, changeover, by-pass and mechanically interlocked switch combinations can be built up by means of conversion kits.

The switch fuses are available for all types of fuse links, DIN, BS, NFC, UL, CSA.

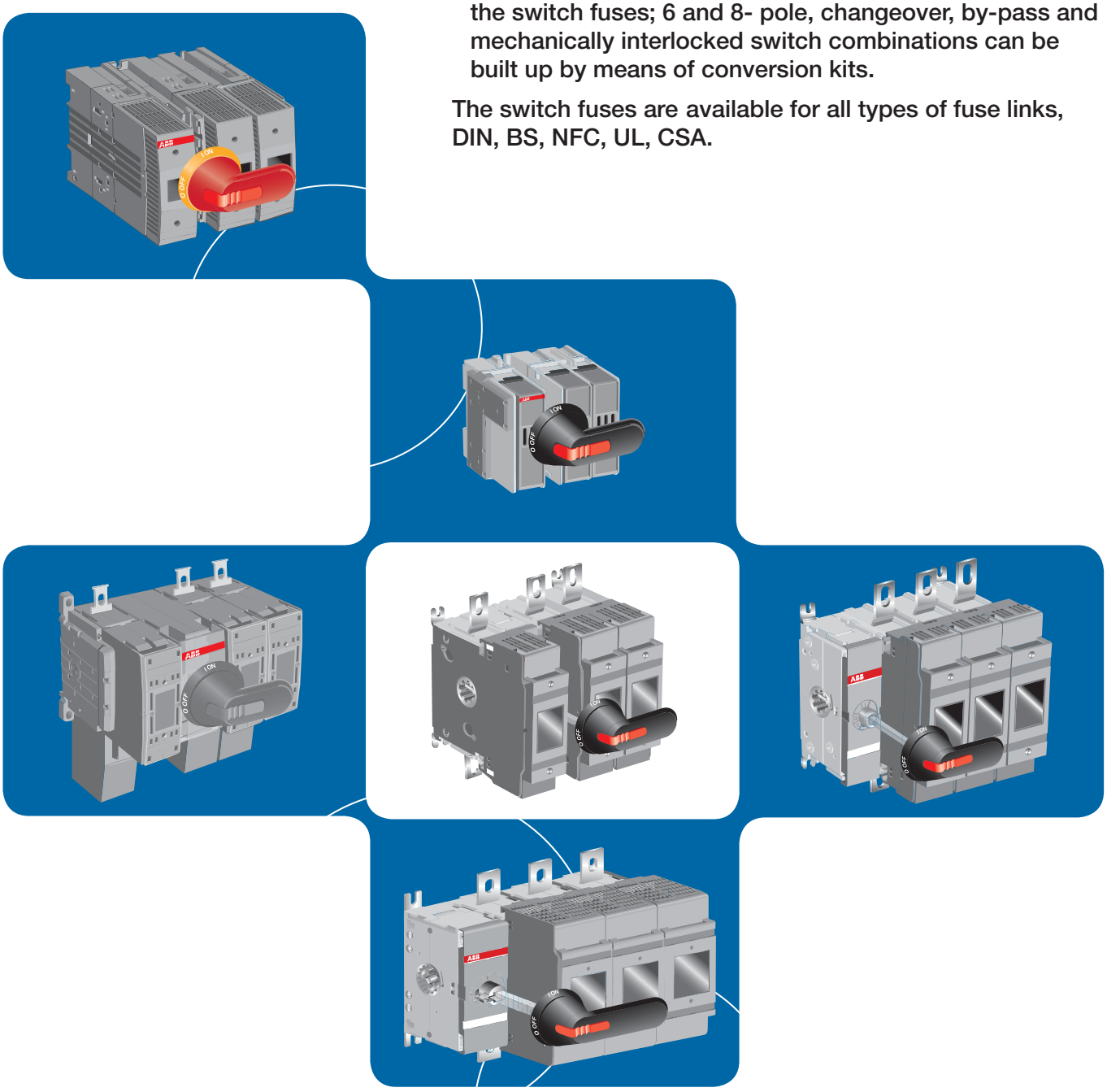

Designed for safety

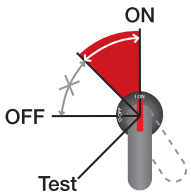

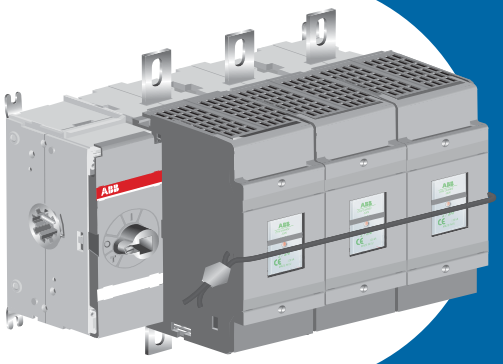

The switch fuse ensures safe operation, protecting both people and equipment.

Designed and based on substantial experience of electrical safety, the switch fuse eliminates the risk of electrical accidents:

- The fuse covers cannot be opened while the switch fuse is in the ON-position and can be sealed in the closed position.
- The double insulated external operating handle eliminates the risk of touching live parts outside the box.
- The handle indicates the position of the contacts with complete reliability in all situations.

Easy, flexible installation



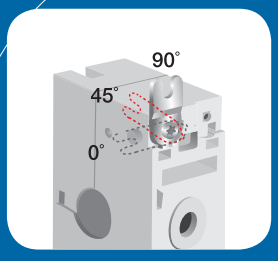

The OS 200...1250 switch fuse is easy to use and a snap to install according to your choice: the adjustable mounting feet allow both top and side mounting of the switch fuse.

The OS switch fuse offers you flexible cabling options. The high terminal positioning with space to the back plate simplifies the mounting of cables. It's also ideal for double cabling, which in turn saves on space.

Switch fuses OS 16-160
Technical data

Technical data according to IEC 60947-3

		Switch size	A	OS Mini 16	OS Mini 20	OS Mini 25
Rated insulation voltage	Pollution degree 3		V	1 000	1 000	1 000
Dielectric strength		50 Hz 1min.	kV	10	10	10
Rated impulse withstand voltage			kV	12	12	12
Rated thermal current in ambient 40 °C [5] /	In open air		A/W	16/3.5	20/3.5	25/3.5
max. fuse power dissipation[1]	In enclosure[2]		A/W	16/3.5	20/3.5	25/3.5
	In enclosure with solid links		A	32	32	32
...with minimum cable cross section		Cu	mm^2	2.5	2.5	4
Rated operational voltage AC-20 and DC-20			V	1 000	1 000	1 000
Rated operational current, AC-21A		up to 500 V	A	16	20	25
		690 V	A	16	20	25
Rated operational current, AC-22A		up to 500 V	A	16	20	25
		690 V	A	16	20	25
Rated operational current, AC-23A		up to 500 V	A	16	20	25
		690 V	A	16	20	25
Rated operational current / poles in series DC-21A		48 V	A	16/2	20/2	25/2
		110-220 V	A	16/2	20/2	25/2
		440 V	A	16/4	20/4	25/4
Rated operational current / poles in series DC-22A		48 V	A	16/2	20/2	25/2
		110-220 V	A	16/2	20/2	25/2
		440 V	A	16/4	20/4	25/4
Rated operational current / poles in series DC-23A		48 V	A	16/2	20/2	25/2
		110-220 V	A	16/2	20/2	25/2
		440 V	A	16/4	20/4	25/4
Rated operational power, AC-23[4]		230 V	kW	4	5.5	5.5
	The kW-ratings are accurate for	400 V	kW	7.5	7.5	11
	three-phase 1500 R.P.M. standard	415 V	kW	7.5	7.5	11
	asynchronous motors.	500 V	kW	7.5	11	15
		690 V	kW	11	15	22
Rated breaking capacity in category AC-23		up to 500 V	A	256	256	256
		690 V	A	256	256	256
Rated breaking capacity / poles in series		up to 220 V	A	128/2	128/2	128/2
in category DC-23		440 V	A	128/4	128/4	128/4
Rated conditional short-circuit current	I_p (r.m.s.)	80 kA, 415 V	kA	9	9	9
I_p (r.m.s.) and corresponding max. allowed	Fuse size	OFAA/OFAM	A			
cut-off current $\hat{i}_c$	I_p (r.m.s.)	100 kA, 500 V	kA	8	8	8
	Fuse size	OFAA/OFAM	A			
The cut-off current $\hat{i}_c$ refers to values	I_p (r.m.s.)	50 kA, 690 V	kA	7	7	7
listed by fuse manufacturers	Fuse size	OFAA/OFAM	A			
(single phase test acc. to IEC60269).	I_p (r.m.s.)	80 kA, 690 V	kA	7.5	7.5	7.5
	Fuse size	OFAA/OFAM	A			
Rated short-time withstand current, 1 s.	r.m.s. -value		kA	1	1	1
Rated capacitor power	The capacitor rating of the	400 V	kVAr	5	10	12.5
when no initial charge on the capacitor	switch-fuse is limited by	415 V	kVAr	5	10	12
	the fuse link.	690 V	kVAr	8	15	20
Power loss / pole	With rated current, without fuse		W	0.8	1.3	1.3
Mechanical endurance	Divide by two for operation cycles		Oper.	20 000	20 000	20 000
Fuse types, IEC 60269-2-1	DIN 43620, Neozed DIN49522			D 01		10x38
	NFC 63210, 63211					
	BS 88-2, -6 -size /				A1	
	distance of fuse-link bolts		mm		M4/44.5	
			mm			
Weight without accessories	3-pole switch fuses		kg	0.7	0.7	0.7
	4-pole switch fuses		kg	0.9	0.9	0.9
Built-in terminal size		Cu	mm^2	0.75...10	0.75...10	0.75...10
Terminal bolt size (included)	Metric thread diameter x length		mm			
Terminal tightening torque	Counter torque required		Nm	2	2	2
Fuse-links bolts tightening torque			Nm		2	
Operating torque	Typical for 3-pole switch fuses		Nm	3	3	3

* = Utilization category B
[1] Ambient temperature 60 °C: derating 20%.
[2] Mounting on "ceiling": derating 10%. Mounting on wall, horizontal fuses: derating 8%.
[3] Max. fuse body diam. 32 mm.
[4] Some fuse links limit these figures further. Starting current characteristics must be considered separately
[5] Acc. to IEC 60947-1, § 6.1.1.

Switch fuses OS 16-160
Technical data

OS Mini 32	OS Mini 35	OS Mini 40	OS 32	OS 50	OS 63	OS 100	OS 125	OS 160
1 000 10 12	1 000 10 12	1 000 10 12	1 000 10 12	1 000 10 12	1 000 10 12	1 000 10 12	1 000 10 12	1 000 10 12
32/3.5 32/3.5 32 6	35/4 35/4 35 10	40/4.5 40/4.5 40 10	32/7.5 32/7.5 40 6	50/7.5 50/7.5 60 10	63/7.5 63/7.5 85 16	100/12 100/12 150 50	125/12 125/12 150 50	160/12 160/10, 135/12 175 70
1 000	1 000	1 000	1 000	1 000	1 000	1 000	1 000	1 000
32 32 32 32 32 32	35 35 35 35 35 35	40 40 40 40 40 40	32 32 32 32 32 32	50 50 50 50 50 50	63 63 63 63 63 63*	100 100 100 100 100 100*	125 125 125 125 125 125*	160 160 160 160 160 160*
32/2 32/2 32/4	32/2 32/2 32/4	32/2 32/2 32/4	32/2* 32/3* 32/4*	50/2* 50/3* 50/4*	63/2* 63/3* 63/4*	100/2 100/2 100/3	125/2 125/2 125/3	160/2 160/2 160/3
32/2 32/2 32/4	32/2 32/2 32/4	32/2 32/2 32/4	32/2* 32/3* 32/4*	50/2* 50/3* 50/4*	63/2* 63/3* 63/4*	100/2 100/2 100/3	125/2 125/2 125/3	160/2 160/2 160/3
32/2 32/2 32/4	32/2 32/2 32/4	32/2 32/2 32/4	32/2* 32/3* 32/4*	50/2* 50/3* 50/4*	63/2* 63/3* 63/4*	100/2 100/2 100/4	125/2 125/2 125/4	160/2 160/2 125/4
7.5 15 15 18.5 22	7.5 15 15 22 30	11 18.5 18.5 22 30	7.5 15 15 18.5 22	11 22 22 30 37	18.5 30 30 37 55	30 55 55 55 90	37 55 55 75 110	45 75 75 90 132
256 256	280 280	320 320	504 504	504 504	504 504	1280 1280	1280 1280	1280 1280
128/2 128/4	128/2 128/4	128/2 128/4	252/3 252/4	252/3 252/4	252/3 252/4	400/2 400/4	640/2 500/4	640/2 500/4
9	9	9	17 100/100	17	17 100/100	23 125/160	29 125/160	29 125/160
8	8	8	17 100/100	17	17 100/100	22 125/160	22 125/160	22 125/160
7	7	7	13 100/80	13	13 100/80	16 100/125	16 100/125	16 100/125
7.5	7.5	7.5	12 63/63	12	12 63/63	18.5 100/125	18.5 100/125	18.5 100/125
1	1	1	2.5	2.5	2.5	5	5	5
15 15 25	15 15 25	15 15 25	15 16 26	20 25 42	25 32 50	40 42 75	50 55 90	60 65 100
2	2.4	3.5	1	2.5	4	4	5	9
20 000	20 000	20 000	20 000	20 000	20 000	20 000	20 000	20 000
14x51 A1, A2, F1 M4/44.5 (A1) M4/73 (A2)	D 02	000	000. 00 A2-A3 M5/73	14x51	000. 00 22x58 A2-A3 M5/73	22x58 A2-A3 M5/73	000. 00 22x58 A2-A4[3] M5/73, M8/94	000. 00 A2-A4[3] M5/73, M8/94
0.7 0.9 0.75...10	0.7 0.9 0.75...10	0.8 1.0 0.75...10	1.3 1.6 2.5...25	1.3 1.6 2.5...25	1.3 1.6 2.5...25	1.5 1.8	1.5 1.8	1.5 1.8
2	2	2	3.5	3.5	3.5	M6x20 W:M8x25 M6:6-9 M8:15-22	M6x20 W:M8x25 M6:6-9 M8:15-22	M6x20 W:M8x25 M6:6-9 M8:15-22
2 3	3	3	3.5 4	4	3.5 4	M5:3.5 M6:4 8	M5:3.5 M8:5 8	M5:3.5 M8:5 8

Placing options of the operating mechanism

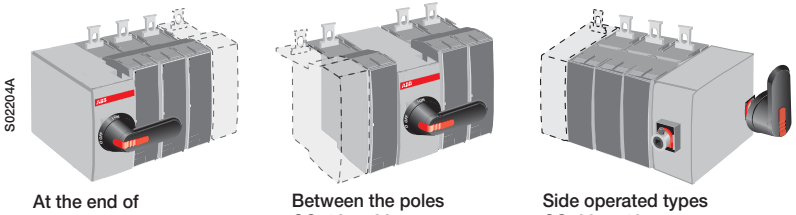

At the end of the switch fuse OS_03 or 04

Between the poles OS_12 or 22

Side operated types OS_30 or 40 OS_03 or 04

Switch fuses OS 200-1250
Technical data

Technical data according to IEC 60947-3

		Switch size	A	OS 200_
Rated insulation voltage and rated operational voltage AC-20 and DC-20	Pollution degree 3		V	1000
Dielectric strength		50 Hz 1min.	kV	10
Rated impulse withstand voltage			kV	12
Rated thermal current in ambient 35 °C and temporarily in 40 °C [5] /	In open air		A/W	200/17
max. fuse power dissipation	In enclosure		A/W	200/15
...with minimum cable cross section		Cu	mm^2	95
Rated thermal current of detachable neutral	In open air / Cu cable or bar cross section	In "N3" types	A/mm^2	290/120
Derating, mounting on wall horizontal fuses	In open air or ventilated enclosure		%	0
	Totally enclosed		%	5
Derating at 60 °C	In open air / in enclosure		%	20/20
Rated operational current AC-21A		≤ 500 V	A	200
		690 V	A	200
Rated operational current AC-22A		≤ 415 V	A	200
		500 V	A	200
		690 V	A	200
Rated operational current AC-23A		≤ 415 V	A	200
		500 V	A	200
		690 V	A	200
Rated operational current / poles in series DC-21A, DC-22A and DC-23A		≤ 220 V	A	200/1
		440 V	A	200/2
		660 V	A	200/3
		750 V	A	180/4
		880 V	A	180/4
Rated operational power AC-23[1]		230 V	kW	60
		400 V	kW	110
		415 V	kW	110
		500 V	kW	132
		690 V	kW	200
Rated breaking capacity AC-23		≤ 500 V	A	1600
		690 V	A	1600
Rated conditional short-circuit current I_p (r.m.s.)	I_p (r.m.s.)	80 kA, 415 V	kA	35
	Max. OFA_ fuse size gG/aM		A	250/200
and corresponding max. allowed cut-off current $\hat{i}_c$	I_p (r.m.s.)	100 kA, 500 V	kA	37.5
	Max. OFA_ fuse size gG/aM		A	250/200
	I_p (r.m.s.)	80 kA, 690 V	kA	25
	Max. OFA_ fuse size gG/aM		A	160/
The cut-off current $\hat{i}_c$ refers to values listed by fuse manufacturers (single phase test acc. to IEC60269)	I_p (r.m.s.)	50 kA, 415 V	kA	28
	Max. BS fuse size gG/gM		A	200/200M315
	I_p (r.m.s.)	80 kA, 690 V	kA	28
	Max. BS fuse size gG/gM		A	200/200M250
Rated short-time withstand current, 1s.	r.m.s. -value		kA	8
	Max. distance from switch frame to nearest busbar/cable support		mm	150
Rated capacitor power when no initial charge of the capacitor	The capacitor ratings of the switch-fuses are limited by the fuse links	400 V	kVAr	90
		415 V	kVAr	100
		500 V	kVAr	120
		690 V	kVAr	160
Power loss / pole	With rated current, without fuse		W	8
Mechanical endurance	Divide by two for operation cycles		Oper.	20 000
Fuse types, IEC 60269-2	Sec. I, DIN 43620			0
	Sec. IA, NFC 0-3 Ref.A, 4a Ref.B			
	Sec. II, BS 88			B1-B2
	Size / distance of fuse-link bolts		mm	M6/111
Weight without accessories	3-pole switch fuses		kg	2.6
Terminal bolt size (included)	Metric thread diameter x length		mm	M8x25
Terminal tightening torque	Counter torque required		Nm	15-22
Fuse-links bolts tightening torque			Nm	4
Operating torque	Typical for 3-pole switch fuses		Nm	7

[1] These values are given for guidance and may vary acc. to the motor manufacturer.
[2] Max fuse body dia 52 mm.
[3] Max fuse body dia 62 mm.
[4] Category B
[5] Acc. to IEC 60957-2, § 6.1.1.

Switch fuses OS 200-1250
Technical data

OS 250_	OS 315_	OS 400_	OS 630_	OS 800_	OS 1250_
1000 10 12	1000 10 12	1000 10 12	1000 10 12	1000 10 12	1000 10 12
250/23 250/20 120	315/32 315/32 185	400/45 400/30 240	630/60 570/50 2 x 185	800/65 720/55 2 x 240	1250/110 1000/85 2 x 400
290/120	450/240	450/240	900/2 X 240	900/2 x 240	1250/2 x 400
0 5					
20/20					
250 250	315 315	400 400	630 630	800 800	1250 [4] 1250 [4]
250 250 250	315 315 315	400 400 400	630 630 630	800 800 800	1250 1250 [4] 1250 [4]
250 250 250	315 315 315	400 400 400	630 630 630	800 800 800	1000 1000 [4] 1000 [4]
250/1 250/2 250/3 230/4 230/4	315/2 315/3[4] 315/4[4] 315/4[4]	400/2 400/3[4] 400/4[4] 400/4[4]	630/1[4] 630/2[4] 630/3[4] 630/4[4] 630/4[4]	800/1[4] 800/2[4] 720/3[4] 720/4[4] 720/4[4]	
75 140 145 170 250	100 160 180 220 315	132 220 230 280 400	200 355 355 450 630	250 450 450 560 710	315 560 560 710 1000
2000 2000	3200 3200	3200 3200	6400 6400	6400 6400	8000 8000
40.5 355/315		59 500/500	77 800/800	77 800/800	89 1250/1250
37.5 250/250		63.5 500/500	83 800/800	83 800/800	105 1250/-
32.5 200/250		46 315/400	55 -/630	55 -/630	88 1000/1000
28 250/200M315	44 400/400M500	44 400/400M500			
28 250/200M250	48 400/400M450	48 400/400M450	55	55	109 1250/-
8 150	14 150	14 150	18 150	18 150	40 150
105 115 135 190	145 160 175 250	180 200 215 325	250 270 300 450	310 340 375 550	440 460 550 750
13	19	30	46	75	75
20 000	16 000	16 000	10 000	10 000	6000
0-1 1 B1-B3[2] M8/111	B1-B4[3] M8/111	0-2 2 B1-B4[3] M8/111	3 3 C1-C2 M10/133, 184	3 3 C1-C3 M10/133, 184	4, 4 a 4 a D1 2xM12/149
3.1	5.7	5.7	11.5	11.5	29
M10x30 30-44 5 7	M10x30 30-44 20 19	M10x30 30-44 20 19	M12x40 50-75 M10:30 M12:40 38	M12x40 50-75 M10:30 M12:40 38	M12x50 50-75 M12:40 65

Placing options of the operating mechanism

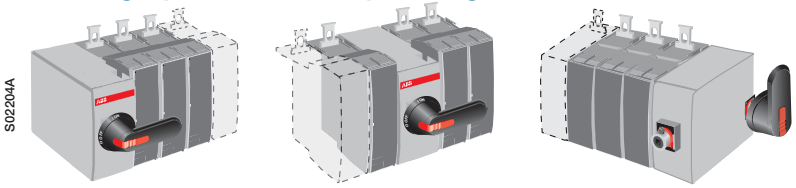

At the end of the switch fuse OS_03 or 04

Between the poles OS_12 or 22

Side operated types OS_30 or 40 OS_03 or 04

Fusible disconnect switches OS 30-800
Technical data

			A	OS Mini	OS
		Switch size		30	60
		Approvals	3 pole	UL 98/CSA/IEC	UL 98/CSA/IEC
			4 pole	UL 98/CSA/IEC	UL 98/CSA/IEC

Technical data according to UL/CSA

General purpose amp rating	pf= 0.7...0.8	-40° to 40 °C	A	30	60
Max. oprerating voltage			V	600	600
Max. horsepower rating / motor FLA current	pf= 0.4...0.5	240 V	HP/A	7.5/22.0	15/42.0
	Three phase	480 V	HP/A	15/21.0	30/40.0
		600 V	HP/A	20/22.0	50/52.0
	Single phase	120 V	HP/A	2/24.0	
		240 V	HP/A	3/17.0	
Short circuit rating with fuse			kA	200	200
		UL fuse size	A	30	60
		UL fuse type		J/CC	J
		CSA fuse type		C	C
Min. electrical endurance	pf= 0.75...0.8	operation cycles		6000	6000
Mechanical endurance		operation		20 000	20 000
Terminal lug kits				Integral	Integral
Wire range			AWG	#18-8	#14-4
Torque	Wire tightening		lb.in.	17	30
	Lug mounting		lb.in.	N/A	N/A

Technical data according to IEC 60947-3

Rated insulation voltage	Pollution degree 3		V	1 000	1 000
Dielectric strength		50 Hz 1min.	kV	10	10
Rated impulse withstand voltage			kV	12	12
Rated thermal current in ambient 40 °C /	In open air		A/W	32/3.5	63/7.5
max. fuse power dissipation[1)]	In enclosure[2)]		A/W	32/3.5	63/7.5
...with minimum cable cross section		Cu	mm^2	6	16
Rated operational current, AC-23A		up to 500 V	A	32	63
		690 V	A	32	63*
Rated operational power, AC-23[3)]	The kW-ratings are accurate for	230 V	kW	7.5	18.5
	three-phase 1500 R.P.M. standard	400 V	kW	15	30
	asynchronous motors.	415 V	kW	15	30
		500 V	kW	18.5	37
		690 V	kW	22	55
Rated breaking capacity in category AC-23		up to 500 V	A	256	504
		690 V	A	256	504
Rated short-time withstand current, 1 s	r.m.s. -value		kA	1	2.5
Power loss / pole	With rated current, without fuse		W	2	4
Weight without accessories	3-pole switch fuses		kg	0.7	1.3
	4-pole switch fuses		kg	0.9	1.6
Built-in terminal size		Cu	mm^2	0.75...10	2.5...25
Terminal bolt size (included)	Metric thread diameter x length		mm		
Fuse-links bolts tightening torque			Nm	2	3.5

*) = Utilization category B
1) Ambient temperature 60 °C: derating 20%
2) Mounting on "ceiling": derating 10%. Mounting on wall, horizontal fuses: derating 8%
3) Some fuse links limit these figures further. Starting current characteristics must be considered separately.

Fusible disconnect switches OS 30-800
Technical data

OS 100	OS 200	OS 400	OS 600	OS 800	OS 1200
UL 98/CSA/IEC UL 98/CSA/IEC	UL 98/CSA/IEC UL 98/CSA/IEC	UL 98/CSA/IEC UL 98/CSA/IEC	UL 98/CSA/IEC UL 98/CSA/IEC	UL 98/CSA/IEC UL 98/CSA/IEC	UL 98/CSA/IEC UL 98/CSA/IEC
100 600	200 600	400 600	600 600	800 600	1200 600
30/80.0 60/77.0 75/77.0	60/154.0 125/156.0 150/144.0	125.0/312.0 250.0/302.0 350.0/336.0	200/480.0 400/477.0 500/472.0	250/602.0 500/590.0 500/472.0	
200 100 J C	200 200 J	200 400 J	200 600 J	200 800 L	200 1200 L
6000 20 000	6000 16 000	1000 12 000	1000 4000	500 3000	500 2000
OZXA-24 #14-2/0	OZXA-200 #4-300MCM	OZXA-400 #2-600MCM	OZXA-800 (2)#2-600MCM	OZXA-800 (2)#2-600MCM	OZXA-1200 (4)#2-600MCM
120 50	275	375	500 480	500 480	500 480
1 000 10 12	1 000 10 12	1 000 10 12	1 000 10 12	1 000 10 12	1000 10 12
160/12	200/17	400/45	630/60	800/65	1250/110
160/10, 135/12	200/15	400/30	570/50	720/55	1000/85
70	95	240	2x185	2x240	2x400
160 160*	200 200	400 400	630 630	800 800	1000 *) 1000 *)
45 75 75 90 132	60 110 110 132 200	132 220 230 280 400	200 355 355 450 630	250 450 450 560 710	315 *) 560 *) 560 *) 710 *) 1000 *)
1280 1280	1600 1600	3200 3200	6400 6400	6400 6400	8000 8000
5 9	8 8	14 30	20 46	20 75	 75
1.5 1.8	2.6	5.7	11.5	11.5	29
M6x20 M5:3.5 M8:5	M8x25 4	M10x30 20	M12x40 40	M12x40 40	M12x50 40

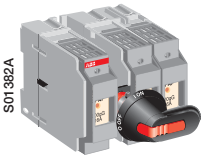

OS40FD12000 (OS Mini)

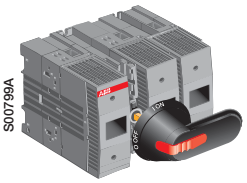

OS32...63D12

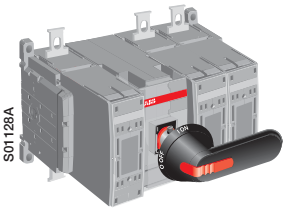

OS125...160D12

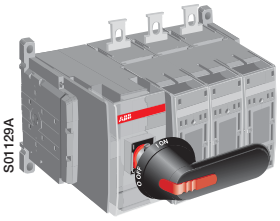

OS125...160D03

Front operated switch fuses

Including terminal bolt kit (OS125...160), a black ON-OFF plastic handle and shaft as standard. The handle is IP65 protected, padlockable in the OFF-position and with door interlock in the ON-position. The shaft is adjustable for a range of installation depths.

Rated current AC-20...23 ≤ 690V [A]	Rated power AC-23 400/500/690V [kW]	Fuse size	Number of poles	Type	Order number	Units/ type [pcs]	Weight [kg]
Mechanism between the poles							
Protected tunnel terminals, IP20 (OS Mini).							
40	18.5/22/30	000	3	OS40FD12000	1SCA108914R1001	1	0.8
40	18.5/22/30	000	4	OS40FD22000N1	1SCA108938R1001	1	1.0
Protected tunnel terminals, IP20. Terminal shroud OSS63G1 needed for maintaining IP20 rating for wire sizes <10mm^2.							
32	15/18.5/22	000,00	3	OS32D12	1SCA022456R9710	1	1.3
32	15/18.5/22	000,00	4	OS32D22N1	1SCA022456R9890	1	1.6
32	15/18.5/22	000,00	4	OS32D22F	1SCA022456R9970	1	1.6
63	30/37/55	000,00	3	OS63D12	1SCA022434R7810	1	1.3
63	30/37/55	000,00	4	OS63D22N1	1SCA022457R0040	1	1.6
63	30/37/55	000,00	4	OS63D22F	1SCA022456R9460	1	1.6
Terminal width 15 mm							
125	55/75/110	000,00	3	OS125D12	1SCA022472R1860	1	1.5
125	55/75/110	000,00	4	OS125D22N1	1SCA022537R8730	1	1.8
125	55/75/110	000,00	4	OS125D22F	1SCA022507R2900	1	1.8
160	80/110/132	000,00	3	OS160D12	1SCA022472R0030	1	1.5
160	80/110/132	000,00	4	OS160D22N1	1SCA022537R6520	1	1.8
160	80/110/132	000,00	4	OS160D22F	1SCA022506R0560	1	1.8
Terminal width 20 mm							
125	55/75/110	000,00	3	OS125D12W	1SCA022537R2020	1	1.5
125	55/75/110	000,00	4	OS125D22N1W	1SCA022537R8900	1	1.8
125	55/75/110	000,00	4	OS125D22FW	1SCA022537R3260	1	1.8
160	75/90/132	000,00	3	OS160D12W	1SCA022510R6650	1	1.5
160	75/90/132	000,00	4	OS160D22N1W	1SCA022537R8570	1	1.8
160	75/90/132	000,00	4	OS160D22FW	1SCA022510R6810	1	1.8
Mechanism at the end of the switch fuse							
Terminal width 15 mm							
125	55/75/110	000,00	3	OS125D03	1SCA022469R8780	1	1.5
125	55/75/110	000,00	4	OS125D04N2	1SCA022507R3030	1	1.8
125	55/75/110	000,00	4	OS125D04F	1SCA022469R8860	1	1.8
160	75/90/132	000,00	3	OS160D03	1SCA022456R8310	1	1.5
160	75/90/132	000,00	4	OS160D04N2	1SCA022507R2650	1	1.8
160	75/90/132	000,00	4	OS160D04F	1SCA022469R8940	1	1.8
Terminal width 20 mm							
125	55/75/110	000,00	3	OS125D03W	1SCA022537R2110	1	1.5
125	55/75/110	000,00	4	OS125D04N2W	1SCA022538R2250	1	1.8
125	55/75/110	000,00	4	OS125D04FW	1SCA022537R3420	1	1.8
160	75/90/132	000,00	3	OS160D03W	1SCA022510R6310	1	1.5
160	75/90/132	000,00	4	OS160D04N2W	1SCA022510R6490	1	1.8
160	75/90/132	000,00	4	OS160D04FW	1SCA022510R6570	1	1.8

Shafts and handles included as standard

Suitable for switches	Included shaft	Included handle	Included terminal bolts
OS40_	OXP6X150	OHB65J6	
OS32_...63_	OXP6X161	OHB65J6	
OS125_...160_	OXP6X161	OHB65J6	M6X20
OS125_W...160_W	OXP6X161	OHB65J6	M8X25

F = Fused neutral
N1 = Non-fused neutral on the left side
N2 = Non-fused neutral on the right side

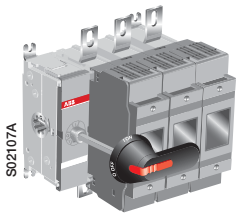

OS200D03

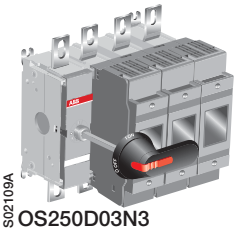

OS250D03N3

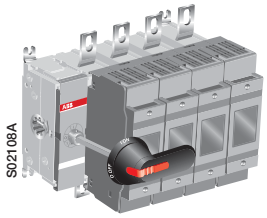

OS250D04

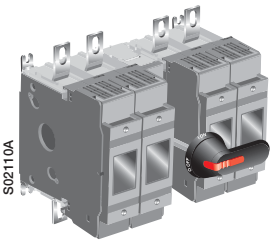

OS250D22N2

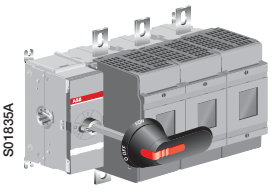

OS400D03

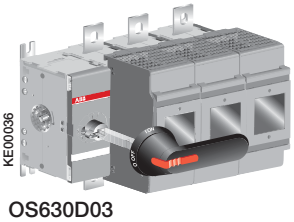

OS630D03

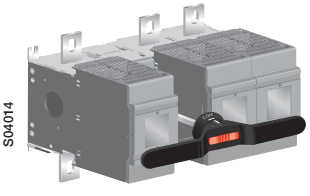

OS1250D12P

Front operated switch fuses

Including terminal bolt kit, a black ON-OFF plastic handle and shaft as standard. The handle is IP65 protected, padlockable in the OFF-position and with door interlock in the ON-position. The shaft is adjustable for a range of installation depths.

Rated current AC-20…23 ≤ 690V [A]	Rated power AC-23 400/500/690V [kW]	Number of poles	Fuse size	Type	Order number	Units/ type [pcs]	Weight [kg]
Mechanism between the poles							
200	110/132/200	3	00	OS200DZ12P	1SCA022820R9150	1	3.3
200	110/132/200	3	0	OS200D12P	1SCA022721R3050	1	3.3
200	110/132/200	4	0	OS200D22N2P	1SCA022721R3130	1	4.2
250	145/170/250	3	0-1	OS250D12P	1SCA022726R8380	1	4.3
250	145/170/250	4	0-1	OS250D22N2P	1SCA022726R8460	1	5.1
400	230/280/400	3	0-2	OS400D12P	1SCA022753R3800	1	7.1
400	230/280/400	4	0-2	OS400D22N2P	1SCA022753R1770	1	9.1
630	355/450/630	3	3	OS630D12P	1SCA022825R3810	1	13.6
630	355/450/630	4	3	OS630D22N2P	1SCA022825R4450	1	16.9
800	450/560/710	3	3	OS800D12P	1SCA022825R5340	1	13.6
800	450/560/710	4	3	OS800D22N2P	1SCA022825R5510	1	16.9
1250A[1] 1000A[2]	560/710/1000	3	4	OS1250D12P	1SCA105246R1001	1	46
1250A[1] 1000A[2]	560/710/1000	4	4	OS1250D22N2P	1SCA107933R1001	1	55
1250A[1] 1000A[2]	560/710/1000	3	4a	OS1250DA12P	1SCA105241R1001	1	46
1250A[1] 1000A[2]	560/710/1000	4	4a	OS1250DA22N2P	1SCA107935R1001	1	55
Mechanism at the end of the switch fuse							
200	110/132/200	3	00	OS200DZ03P	1SCA022797R3440	1	3.3
200	110/132/200	4	00	OS200DZ04N2P	1SCA022820R9230	1	4.2
200	110/132/200	3	0	OS200D03P	1SCA022709R9500	1	3.3
200	110/132/200	3+N	0	OS200D03N3P	1SCA022749R8710	1	3.4
200	110/132/200	4	0	OS200D04N2P	1SCA022709R9680	1	4.2
200	110/132/200	4	0	OS200D04FP	1SCA022725R4750	1	4.2
250	145/170/250	3	0-1	OS250D03P	1SCA022719R0090	1	4.3
250	145/170/250	3+N	0-1	OS250D03N3P	1SCA022749R9430	1	4.4
250	145/170/250	4	0-1	OS250D04N2P	1SCA022719R2380	1	5.1
250	145/170/250	4	0-1	OS250D04FP	1SCA022726R8620	1	5.1
400	230/280/400	3	0-2	OS400D03P	1SCA022719R0250	1	7.1
400	230/280/400	3+N	0-2	OS400D03N3P	1SCA022753R9320	1	7.5
400	230/280/400	4	0-2	OS400D04N2P	1SCA022719R2460	1	9.1
400	230/280/400	4	0-2	OS400D04FP	1SCA022753R7110	1	9.1
630	355/450/630	3	3	OS630D03P	1SCA022825R2830	1	13.6
630	355/450/630	3+N	3	OS630D03N3P	1SCA100858R1001	1	14.5
630	355/450/630	4	3	OS630D04N2P	1SCA022825R4290	1	16.9
630	355/450/630	4	3	OS630D04FP	1SCA022825R4610	1	16.9
800	450/560/710	3	3	OS800D03P	1SCA022825R4880	1	13.6
800	450/560/710	3+N	3	OS800D03N3P	1SCA100859R1001	1	14.5
800	450/560/710	4	3	OS800D04N2P	1SCA022825R5180	1	16.9
800	450/560/710	4	3	OS800D04FP	1SCA022825R5000	1	16.9
1250A[1] 1000A[2]	560/710/1000	3	4	OS1250D03P	1SCA105475R1001	1	46
1250A[1] 1000A[2]	560/710/1000	3+N	4	OS1250D03N3P	1SCA107932R1001	1	47
1250A[1] 1000A[2]	560/710/1000	4	4	OS1250D04N2P	1SCA105248R1001	1	55
1250A[1] 1000A[2]	560/710/1000	4	4	OS1250D04FP	1SCA105473R1001	1	55
1250A[1] 1000A[2]	560/710/1000	3	4a	OS1250DA03P	1SCA105238R1001	1	46
1250A[1] 1000A[2]	560/710/1000	3+N	4a	OS1250DA03N3P	1SCA107934R1001	1	47
1250A[1] 1000A[2]	560/710/1000	4	4a	OS1250DA04N2P	1SCA105243R1001	1	55
1250A[1] 1000A[2]	560/710/1000	4	4a	OS1250DA04FP	1SCA105240R1001	1	55

Shafts and handles included as standard

Suitable for switches	Included shaft	Included handle	Included terminal bolts
OS200_P	OXP6X210	OHB65J6	M8X25
OS250_P	OXP6X210	OHB65J6	M10X30
OS400_P	OXP12X250	OHB95J12	M10X30
OS630...800_P	OXP12X280	OHB145J12	M12X40
OS1250_P	OXP12X395	OHB200J12P	M12x60

F = Fused fourth pole.
N2 = 4-pole switch with the fourth pole on the right side.
N3 = Include a detachable neutral link integrated into the mechanism.

[1] AC-20…22
[2] AC-23

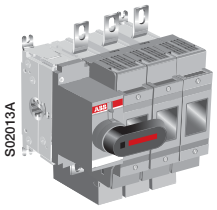

OS250D03K

Front operated switch fuses with direct mounted handle

Including a black Test-OFF-ON plastic handle and shaft as standard. The handle is padlockable in the OFF-position.

Rated current AC-20...23 ≤ 690V [A]	Rated power AC-23 400/500/690V [kW]	Number of poles	Fuse size	Type	Order number	Units/ type [pcs]	Weight [kg]
200	110/132/200	3	0	OS200D03K	1SCA022764R7130	1	3.3
200	110/132/200	4	0	OS200D04N2K	1SCA022768R7430	1	4.2
250	145/170/250	3	0-1	OS250D03K	1SCA022763R6360	1	4.3
250	145/170/250	4	0-1	OS250D04N2K	1SCA022763R6440	1	5.1
400	230/280/400	3	0-2	OS400D03K	1SCA022779R5410	1	7.0
400	230/280/400	4	0-2	OS400D04N2K	1SCA022763R7250	1	9.0
630	355/450/630	3	3	OS630D03K	1SCA108704R1001	1	13
630	355/450/630	4	3	OS630D04N2K	1SCA108705R1001	1	16
800	450/560/710	3	3	OS800D03K	1SCA108725R1001	1	13
800	450/560/710	4	3	OS800D04N2K	1SCA108722R1001	1	16
1250A[1] 1000A[2]	560/710/1000	3	4	OS1250D03K	1SCA108718R1001	1	45
1250A[1] 1000A[2]	560/710/1000	4	4	OS1250D04N2K	1SCA108719R1001	1	54
1250A[1] 1000A[2]	560/710/1000	3	4a	OS1250DA03K	1SCA108720R1001	1	45
1250A[1] 1000A[2]	560/710/1000	4	4a	OS1250DA04N2K	1SCA108721R1001	1	54

Shafts and handles included as standard

Suitable for switches	Included shaft	Included handle	Included terminal bolts
OS200_K		OSV250DK	M8X25
OS250_K		OSV250DK	M10X30
OS400_K		OSV400DK	M10X30
OS630...800_K		OSV800DK	M12X40
OS1250_K		OSV1250DK	M12x60

[1] AC-20...22
[2] AC-23

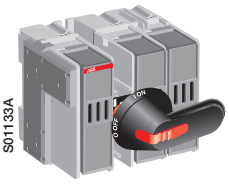

(OS Mini)
OS20...32FB12A1
OS32FB12A2
OS32FB12F1

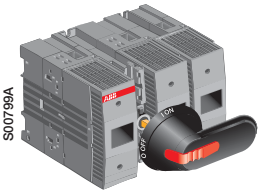

OS32...63B12

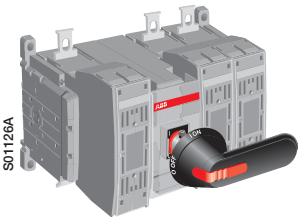

OS100...160B12

Front operated switch fuses

Including terminal bolt kit (OS100...160), a black ON-OFF plastic handle and shaft as standard. The handle is IP65 protected, padlockable in the OFF-position and with door interlock in the ON-position. The shaft is adjustable for a range of installation depths.

Rated current AC-20...23 ≤ 690V [A]	Rated power AC-23 415/500/690V [kW]	Fuse size	Number of poles	Type	Order number	Units/ type [pcs]	Weight [kg]
Mechanism between the poles							
Protected tunnel terminals, IP20, (OS Mini).							
20	7.5/11/15	A1	3	OS20FB12A1	1SCA108790R1001	1	0.7
20	7.5/11/15	A1	4	OS20FB22A1N1	1SCA108796R1001	1	0.9
32	15/18/25	A1	3	OS32FB12A1	1SCA108840R1001	1	0.7
32	15/18/25	A1	4	OS32FB22A1N1	1SCA108853R1001	1	0.9
32	15/18.5/22	A2	3	OS32FB12A2	1SCA108847R1001	1	0.7
32	15/18.5/22	A2	4	OS32FB22A2N1	1SCA108863R1001	1	0.9
32	15/18.5/22	F1	3	OS32FB12F1	1SCA108851R1001	1	0.7
32	15/18.5/22	F1	4	OS32FB22F1N1	1SCA109003R1001	1	0.9
Protected tunnel terminals, IP20. Terminal shroud OSS63G1 needed for maintaining IP20 rating for wire sizes <10mm^2.							
32	15/18.5/22	A2, A3	3	OS32B12	1SCA022470R7610	1	1.3
32	15/18.5/22	A2, A3	4	OS32B22N1	1SCA022471R7080	1	1.6
63	30/37/55	A2, A3	3	OS63B12	1SCA022434R7990	1	1.3
63	30/37/55	A2, A3	4	OS63B22N1	1SCA022469R2580	1	1.6
Terminal width 15 mm							
100	55/55/90	A2, A3	3	OS100B12	1SCA022483R4120	1	1.5
100	55/55/90	A2, A3	4	OS100B22N1	1SCA022544R6240	1	1.8
125	55/75/110	A2, A3, A4[1)]	3	OS125B12	1SCA022483R4390	1	1.5
125	55/75/110	A2, A3, A4[1)]	4	OS125B22N1	1SCA022544R6320	1	1.8
160	75/90/132	A2, A3, A4[1)]	3	OS160B12	1SCA022483R4470	1	1.5
160	75/90/132	A2, A3, A4[1)]	4	OS160B22N1	1SCA022544R6590	1	1.8
Terminal width 20 mm							
100	55/55/90	A2, A3	3	OS100B12W	1SCA022546R9610	1	1.5
100	55/55/90	A2, A3	4	OS100B22N1W	1SCA022552R0580	1	1.8
125	55/75/110	A2, A3, A4[1)]	3	OS125B12W	1SCA022546R4730	1	1.5
125	55/75/110	A2, A3, A4[1)]	4	OS125B22N1W	1SCA022552R6780	1	1.8
160	75/90/132	A2, A3, A4[1)]	3	OS160B12W	1SCA022545R9650	1	1.5
160	75/90/132	A2, A3, A4[1)]	4	OS160B22N1W	1SCA022552R0740	1	1.8

Shafts and handles included as standard

Suitable for switches	Included shaft	Included handle	Included terminal bolts
OS20...32FB_ (OS Mini)	OXP6X150	OHB65J6	
OS32...63	OXP6X161	OHB65J6	
OS100...160	OXP6X161	OHB65J6	M6X20
OS100_W...160_W	OXP6X161	OHB65J6	M8X25

[1)] Max. fuse diameter 32 mm
N1 = Non-fused neutral on the left side

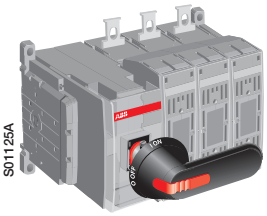

OS100...160B03

Front operated switch fuses

Including terminal bolt kit, a black ON-OFF plastic handle and shaft as standard. The handle is IP65 protected, padlockable in the OFF-position and with door interlock in the ON-position. The shaft is adjustable for a range of installation depths.

Rated current AC-20...23 ≤ 690V [A]	Rated power AC-23 415/500/690V [kW]	Fuse size	Number of poles	Type	Order number	Units/ type [pcs]	Weight [kg]
Mechanism at the end of the switch fuse							
Terminal width 15 mm							
100	55/55/90	A2, A3	3	OS100B03	1SCA022456R9030	1	1.5
100	55/55/90	A2, A3	4	OS100B04N2	1SCA022508R3690	1	1.8
125	55/75/110	A2, A3, A4[1)]	3	OS125B03	1SCA022456R9110	1	1.5
125	55/75/110	A2, A3, A4[1)]	4	OS125B04N2	1SCA022508R3850	1	1.8
160	75/90/132	A2, A3, A4[1)]	3	OS160B03	1SCA022536R0870	1	1.5
160	75/90/132	A2, A3, A4[1)]	4	OS160B04N2	1SCA022508R3770	1	1.8
Terminal width 20 mm							
100	55/55/90	A2, A3	3	OS100B03W	1SCA022546R9530	1	1.5
100	55/55/90	A2, A3	4	OS100B04N2W	1SCA022552R0820	1	1.8
125	55/75/110	A2, A3, A4[1)]	3	OS125B03W	1SCA022546R4220	1	1.5
125	55/75/110	A2, A3, A4[1)]	4	OS125B04N2W	1SCA022552R0910	1	1.8
160	75/90/132	A2, A3, A4[1)]	3	OS160B03W	1SCA022543R3770	1	1.5
160	75/90/132	A2, A3, A4[1)]	4	OS160B04N2W	1SCA022543R3930	1	1.8

Shafts and handles included as standard

Suitable for switches	Included shaft	Included handle	Included terminal bolts
OS100...160B_	OXP6X161	OHB65J6	M6X20
OS100W_...160W_	OXP6X161	OHB65J6	M8X25

[1)] Max. fuse diameter 32 mm.
N2 = Non-fused neutral on the right side

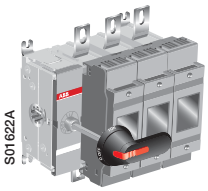

OS200B03

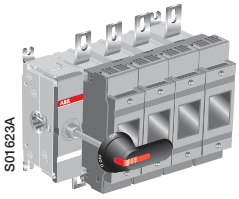

OS200B04

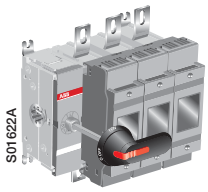

OS250B03

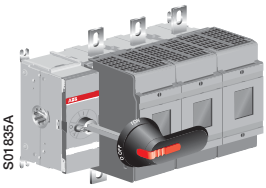

OS400B03

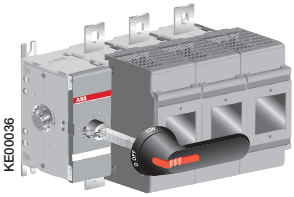

OS800B03

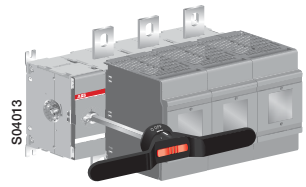

OS1250B03P

Front operated switch fuses

Including terminal bolt kit, a black ON-OFF plastic handle and shaft as standard. The handle is IP65 protected, padlockable in the OFF-position and with door interlock in the ON-position. The shaft is adjustable for a range of installation depths.

Rated current AC-20…23 ≤ 690V [A]	Rated power AC-23 415/500/690V [kW]	Fuse size	Number of poles	Type	Order number	Units/ type [pcs]	Weight [kg]
Mechanism between the poles							
200	110/132/200	B1-B2	3	OS200B12P	1SCA022721R3210	1	3.3
200	110/132/200	B1-B2	4	OS200B22N2P	1SCA022721R3300	1	4.2
250	145/170/250	B1-B3	3	OS250B12P	1SCA022778R9860	1	4.3
250	145/170/250	B1-B3	4	OS250B22N2P	1SCA022778R9940	1	5.1
315	180/220/315	B1-B4	3	OS315B12P	1SCA022753R2310	1	7.1
315	180/220/315	B1-B4	4	OS315B22N2P	1SCA022753R3390	1	9.1
400	230/280/400	B1-B4	3	OS400B12P	1SCA022753R3470	1	7.1
400	230/280/400	B1-B4	4	OS400B22N2P	1SCA022753R7200	1	9.1
630	355/450/630	C1-C2	3	OS630B12P	1SCA022825R6400	1	13.6
630	355/450/630	C1-C2	4	OS630B22N2P	1SCA022825R6660	1	16.9
800	450/560/710	C1-C3	3	OS800B12P	1SCA022825R8280	1	13.6
800	450/560/710	C1-C3	4	OS800B22N2P	1SCA022825R8440	1	16.9
1250A[1] 1000A[2]	560/710/1000	D1	3	OS1250B12P	1SCA105470R1001	1	46
1250A[1] 1000A[2]	560/710/1000	D1	4	OS1250B22N2P	1SCA107937R1001	1	55
Mechanism at the end of the switch fuse							
200	110/132/200	B1-B2	3	OS200B03P	1SCA022709R9330	1	3.3
200	110/132/200	B1-B2	3+N [3]	OS200B03N3P	1SCA022750R0620	1	3.4
200	110/132/200	B1-B2	4	OS200B04N2P	1SCA022709R9410	1	4.2
250	145/170/250	B1-B3	3	OS250B03P	1SCA022750R6660	1	4.3
250	145/170/250	B1-B3	3+N [3]	OS250B03N3P	1SCA022750R8010	1	4.4
250	145/170/250	B1-B3	4	OS250B04N2P	1SCA022750R7800	1	5.1
315	180/220/315	B1-B4	3	OS315B03P	1SCA022719R0680	1	7.1
315	180/220/315	B1-B4	3+N [3]	OS315B03N3P	1SCA022753R8940	1	7.5
315	180/220/315	B1-B4	4	OS315B04N2P	1SCA022719R2710	1	9.1
400	230/280/400	B1-B4	3	OS400B03P	1SCA022719R0840	1	7.1
400	230/280/400	B1-B4	3+N [3]	OS400B03N3P	1SCA022753R9160	1	7.5
400	230/280/400	B1-B4	4	OS400B04N2P	1SCA022719R2890	1	9.1
630	355/450/630	C1-C2	3	OS630B03P	1SCA022825R5850	1	13.6
630	355/450/630	C1-C2	3+N [3]	OS630B03N3P	1SCA100860R1001	1	14.5
630	355/450/630	C1-C2	4	OS630B04N2P	1SCA022825R6230	1	16.9
800	450/560/710	C1-C3	3	OS800B03P	1SCA022825R7550	1	13.6
800	450/560/710	C1-C3	3+N [3]	OS800B03N3P	1SCA100861R1001	1	14.5
800	450/560/710	C1-C3	4	OS800B04N2P	1SCA022825R8010	1	16.9
1250A[1] 1000A[2]	560/710/1000	D1	3	OS1250B03P	1SCA105250R1001	1	46
1250A[1] 1000A[2]	560/710/1000	D1	3+N [3]	OS1250B03N3P	1SCA107936R1001	1	47
1250A[1] 1000A[2]	560/710/1000	D1	4	OS1250B04N2P	1SCA105469R1001	1	55

Shafts and handles included as standard

Suitable for switches	Included shaft	Included handle	Included terminal bolts
OS200_P	OXP6X210	OHB65J6	M8X25
OS250_P	OXP6X210	OHB65J6	M10X30
OS315…400_P	OXP12X250	OHB95J12	M10X30
OS630...800_P	OXP12X280	OHB145J12	M12X40
OS1250_P	OXP12X395	OHB200J12P	M12X60

[1] AC-20…22
[2] AC-23
[3] Include a detachable neutral link integrated into the mechanism

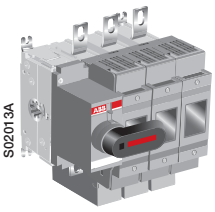

OS200B03K

Front operated switch fuses with direct mounted handle

Including a black Test-OFF-ON plastic handle and shaft as standard. The handle is padlockable in the OFF-position.

Rated current AC-20...23 ≤ 690V [A][kW]	Rated power AC-23 415/500/690V	Fuse size	Number of poles	Type	Order number	Units/ type [pcs]	Weight [kg]
200	110/132/200	B1-B2	3	OS200B03K	1SCA022763R6950	1	3.3
200	110/132/200	B1-B2	4	OS200B04N2K	1SCA022763R7090	1	4.2
250	145/170/250	B1-B3	3	OS250B03K	1SCA022763R6010	1	4.3
250	145/170/250	B1-B3	4	OS250B04N2K	1SCA022763R6280	1	5.1
315	180/220/315	B1-B4	3	OS315B03K	1SCA022763R6520	1	7.0
315	180/220/315	B1-B4	4	OS315B04N2K	1SCA022763R6610	1	9.0
400	230/280/400	B1-B4	3	OS400B03K	1SCA022763R6790	1	7.0
400	230/280/400	B1-B4	4	OS400B04N2K	1SCA022763R6870	1	9.0
630	355/450/630	C1-C2	3	OS630B03K	1SCA108708R1001	1	13.0
630	355/450/630	C1-C2	4	OS630B04N2K	1SCA108710R1001	1	16.0
800	450/560/710	C1-C3	3	OS800B03K	1SCA108713R1001	1	13.0
800	450/560/710	C1-C3	4	OS800B04N2K	1SCA108714R1001	1	16.0
1250A[1] 1000A[2]	560/710/1000	D1	3	OS1250B03K	1SCA108715R1001	1	45
1250A[1] 1000A[2]	560/710/1000	D1	4	OS1250B04N2K	1SCA108717R1001	1	54

Shafts and handles included as standard

Suitable for switches	Included handle	Included terminal bolts
OS200_K	OSV200BK	M8X25
OS250_K	OSV250DK	M10X30
OS315…400_K	OSV400BK	M10X30
OS630...800_K	OSV800DK	M12X40
OS1250_K	OSV1250DK	M12x60

[1] AC-20…22
[2] AC-23
[3] Include a detachable neutral link integrated into the mechanism

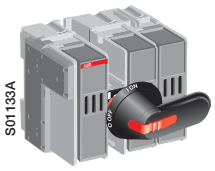

(OS Mini)
OS25...32FF1210

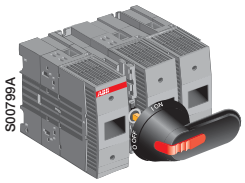

OS50...63F12

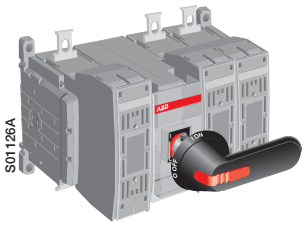

OS100...125F12

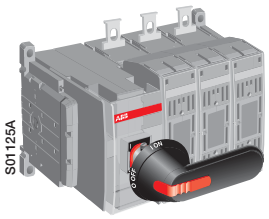

OS100...125F03

Front operated switch fuses

Including terminal bolt kit (OS100...125), a black ON-OFF plastic handle and shaft as standard. The handle is IP65 protected, padlockable in the OFF-position and with door interlock in the ON-position. The shaft is adjustable for a range of installation depths.

Rated current AC-20...23 ≤ 690V [A]	Rated power AC-23 400/500/690V [kW]	Fuse size	Number of poles	Type	Order number	Units/ type [pcs]	Weight [kg]
Mechanism between the poles							
Protected tunnel terminals, IP20.							
25	11/15/22	10x38	3	OS25FF1210	1SCA108636R1001	1	0.7
25	11/15/22	10x38	4	OS25FF2210N1	1SCA108638R1001	1	0.9
25	11/15/22	10x38	4	OS25FF2210F	1SCA108637R1001	1	0.9
32	15/18.5/22	14x51	3	OS32FF1214	1SCA108642R1001	1	0.7
32	15/18.5/22	14x51	4	OS32FF2214N1	1SCA108645R1001	1	0.9
32	15/18.5/22	14x51	4	OS32FF2214F	1SCA108643R1001	1	0.9
Protected tunnel terminals, IP20. Terminal shroud OSS63G1 needed for maintaining IP20 rating for wire sizes <10mm^2.							
50	22/30/37	14x51	3	OS50F12	1SCA022434R8020	1	1.3
50	22/30/37	14x51	4	OS50F22N1	1SCA022471R0820	1	1.6
50	22/30/37	14x51	4	OS50F22F	1SCA022472R0110	1	1.6
63	30/37/55	22x58	3	OS63F12	1SCA022434R8110	1	1.3
63	30/37/55	22x58	4	OS63F22N1	1SCA022471R0740	1	1.6
63	30/37/55	22x58	4	OS63F22F	1SCA022471R9960	1	1.6
Terminal width 15 mm							
100	55/55/90	22x58	3	OS100F12	1SCA022508R2450	1	1.5
100	55/55/90	22x58	4	OS100F22N1	1SCA022544R6670	1	1.8
100	55/55/90	22x58	4	OS100F22F	1SCA022508R2610	1	1.8
125	55/75/110	22x58	3	OS125F12	1SCA022507R7290	1	1.5
125	55/75/110	22x58	4	OS125F22N1	1SCA022544R6750	1	1.8
125	55/75/110	22x58	4	OS125F22F	1SCA022507R7370	1	1.8
Terminal width 20 mm							
100	55/55/90	22x58	3	OS100F12W	1SCA022547R7550	1	1.5
100	55/55/90	22x58	4	OS100F22N1W	1SCA022552R2010	1	1.8
100	55/55/90	22x58	4	OS100F22FW	1SCA022552R2280	1	1.8
125	55/75/110	22x58	3	OS125F12W	1SCA022547R0620	1	1.5
125	55/75/110	22x58	4	OS125F22N1W	1SCA022552R2100	1	1.8
125	55/75/110	22x58	4	OS125F22FW	1SCA022552R2360	1	1.8
Mechanism at the end of the switch fuse							
Terminal width 15 mm							
100	55/55/90	22x58	3	OS100F03	1SCA022502R6460	1	1.5
100	55/55/90	22x58	4	OS100F04N2	1SCA022508R4580	1	1.8
100	55/55/90	22x58	4	OS100F04F	1SCA022502R6540	1	1.8
125	55/75/110	22x58	3	OS125F03	1SCA022502R7010	1	1.5
125	55/75/110	22x58	4	OS125F04N2	1SCA022505R1570	1	1.8
125	55/75/110	22x58	4	OS125F04F	1SCA022503R0810	1	1.8
Terminal width 20 mm							
100	55/55/90	22x58	3	OS100F03W	1SCA022547R7390	1	1.5
100	55/55/90	22x58	4	OS100F04N2W	1SCA022552R2440	1	1.8
100	55/55/90	22x58	4	OS100F04FW	1SCA022552R2610	1	1.8
125	55/75/110	22x58	3	OS125F03W	1SCA022547R0380	1	1.5
125	55/75/110	22x58	4	OS125F04N2W	1SCA022552R2520	1	1.8
125	55/75/110	22x58	4	OS125F04FW	1SCA022552R2790	1	1.8

Shafts and handles included as standard

Suitable for switches	Included shaft	Included handle	Included terminal bolts
OS25...32_	OXP6X150	OHB65J6	
OS50...63_	OXP6X161	OHB65J6	
OS100...125	OXP6X161	OHB65J6	M6X20
OS100_W...125_W	OXP6X161	OHB65J6	M8X25

F = Fused neutral N1 = Non-fused neutral on the left side N2 = Non-fused neutral on the right side



(OS Mini)
OS16...35FD12_

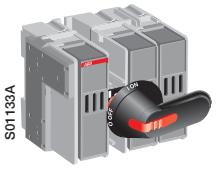

(OS Mini)
OS30FA_

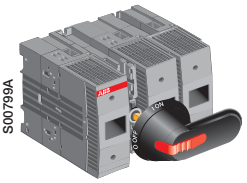

OS60J12_

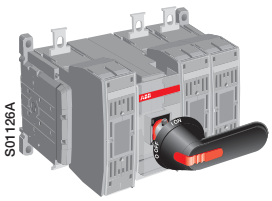

OS100J12_

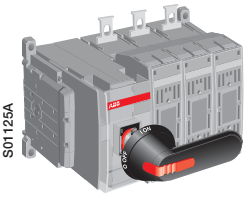

OS100J03_

Front operated switch fuses, Neozed -types

Including a black ON-OFF plastic handle and shaft as standard. The handle is IP65 protected, padlockable in the OFF-position and with door interlock in the ON-position. The shaft is adjustable for a range of installation depths.

Rated current AC-20...23 ≤ 690V [A]	Rated power AC-23 400/500/690V [kW]	Fuse size	Number of poles	Type	Order number	Units/ type [pcs]	Weight [kg]
Mechanism between the poles Protected tunnel terminals, IP20.							
16	7.5/7.5/11	DO1[1)]	3	OS16FD1201	1SCA108788R1001	1	0.7
16	7.5/7.5/11	DO1[1)]	4	OS16FD2201N1	1SCA108789R1001	1	0.9
16	7.5/7.5/11	DO1[1)]	4	OS16FD2201F	1SCA108993R1001	1	0.9
35	15/22/30	DO2[1)]	3	OS35FD1202	1SCA108908R1001	1	0.7
35	15/22/30	DO2[1)]	4	OS35FD2202N1	1SCA108911R1001	1	0.9
35	15/22/30	DO2[1)]	4	OS35FD2202F	1SCA109008R1001	1	0.9

Front operated fusible disconnect switches, UL- and CSA-types

Including terminal bolt set (OS100), a black ON-OFF plastic handle and shaft as standard. The handle is IP65 protected, padlockable in the OFF-position and with door interlock in the ON-position. The shaft is adjustable for a range of installation depths. Fuse standard UL 198C.

Ampere rating [A]	Horse power ratings 3 phase 240/480/600V [HP]	Fuse type, size	Number of poles	Type	Order number	Units/ type [pcs]	Weight [kg]
Mechanism between the poles Protected tunnel terminals, IP20, cable size 0.5...10 mm², (AWG 18 - 8).							
30	7.5/15/20	CC, 30A	3	OS30FACC12P	1SCA108817R1001	1	0.7
30	7.5/15/20	CC, 30A	4	OS30FACC22FP	1SCA108821R1001	1	0.9
30	7.5/15/20	J, 30A	3	OS30FAJ12P	1SCA108828R1001	1	0.7
30	7.5/15/20	J, 30A	4	OS30FAJ22FP	1SCA108831R1001	1	0.9
Protected tunnel terminals, IP20, cable size 2.5...25 mm². Terminal shroud OSS63G1 needed for maintaining IP20 rating for wire sizes <10mm², (AWG 14 - 4).							
60	15/30/50	J, 60A	3	OS60J12P	1SCA022434R8290	1	1.3
60	15/30/50	J, 60A	4	OS60J22N1P	1SCA022471R1210	1	1.6
60	15/30/50	J, 60A	4	OS60J22FP	1SCA022472R0460	1	1.6
Terminal width 15 mm							
100	30/60/75	J, 100A	3	OS100J12P	1SCA022483R4550	1	1.5
100	30/60/75	J, 100A	4	OS100J22N1P	1SCA022544R6830	1	1.8
100	30/60/75	J, 100A	4	OS100J22FP	1SCA022508R2960	1	1.8
Terminal width 20 mm							
100	30/60/75	J, 100A	3	OS100J12WP	1SCA022547R5000	1	1.5
100	30/60/75	J, 100A	4	OS100J22N1WP	1SCA022552R3090	1	1.8
100	30/60/75	J, 100A	4	OS100J22FWP	1SCA022552R3170	1	1.8
Mechanism at the end of the switch fuse **Terminal width 15 mm**							
100	30/60/75	J, 100A	3	OS100J03P	1SCA022456R8810	1	1.5
100	30/60/75	J, 100A	4	OS100J04N2P	1SCA022544R7050	1	1.8
100	30/60/75	J, 100A	4	OS100J04FP	1SCA022508R2700	1	1.8
Terminal width 20 mm							
100	30/60/75	J, 100A	3	OS100J03WP	1SCA022547R4960	1	1.5
100	30/60/75	J, 100A	4	OS100J04N2WP	1SCA022552R3250	1	1.8
100	30/60/75	J, 100A	4	OS100J04FWP	1SCA022552R3330	1	1.8

Shafts and handles included as standard

Suitable for switches	Included shaft	Included handle	Included terminal bolts
OS16...35FD_	OXP6X150	OHB65J6	
OS30FA_	OXP6X150	OHB65J6	
OS60	OXP6X161	OHB65J6	
OS100	OXP6X161	OHB65J6	M6X20
OS100_W	OXP6X161	OHB65J6	M8X25

[1)] Use DO2 adapter rings.
N1 = Non-fused neutral on the left side
F = Fused neutral
N2 = Non-fused neutral on the right side

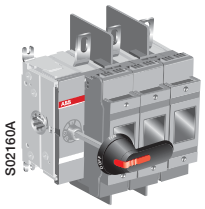
S02160A

OS200J03_

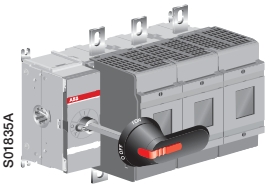
S01835A

OS400J03_

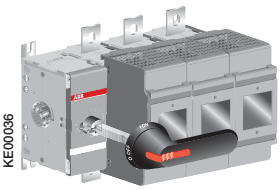
KE00036

OS600...800J/L03_

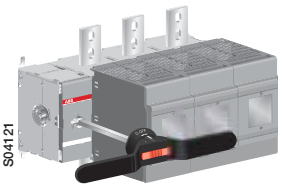
S04121

OS1200L03_

Front operated fusible disconnect switches

Including terminal bolt kit, a black ON-OFF plastic handle and shaft as standard. The handle is IP65 protected, padlockable in the OFF-position and with door interlock in the ON-position. The shaft is adjustable for a range of installation depths. Fuse standards UL 198C.

Ampere rating [A]	Horsepower rating, [HP] 240/480/600V	Number of poles	Type [1]	Order number	Units/ type [pcs]	Weight [kg]
200	60/125/150	3	OS200J03P	1SCA022709R9760	1	3.3
400	125/250/350	3	OS400J03P	1SCA022719R1140	1	7.25
600	200/400/500	3	OS600J03P	1SCA022825R8870	1	13.5
800	250/500/500	3	OS800L03P	1SCA022825R9920	1	13.5
1200		3	OS1200L03P	1SCA105468R1001	1	46

Shafts and handles included as standard

Suitable for switches	Included shaft	Included handle	Included terminal bolts
OS200	OXP6X210	OHB65J6	M8X25
OS400	OXP12X250	OHB95J12	M10X30
OS600...800	OXP12X280	OHB145J12	M12X40
OS1200	OXP12X395	OHB200J12P	M12X60

[1] The switch types suitable for fuses: L: Class L (HRC-L) 600 V fuses, J: Class J 600 V fuses. Information on CSA and UL approval on request.

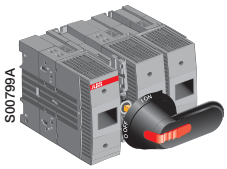

OS30...60C12_

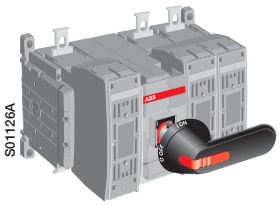

OS100C12_

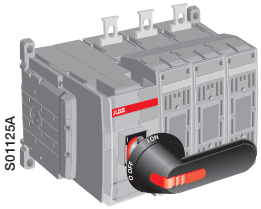

OS100C03_

Front operated fusible disconnect switches

Including terminal bolt set (OS100), a black ON-OFF plastic handle and shaft as standard. The handle is IP65 protected, padlockable in the OFF-position and with door interlock in the ON-position. The shaft is adjustable for a range of installation depths. Fuse standards CSA C22.2 No 106.

Ampere rating [A]	Horse power ratings 3 phase 240/480/600V [HP]	Fuse type, size	Number of poles	Type	Order number	Units/ type [pcs]	Weight [kg]
Mechanism between the poles							
Protected tunnel terminals, IP20, cable size 2.5…25 mm². Terminal shroud OSS63G1 needed for maintaining IP20 rating for wire sizes <10mm², (AWG 14 - 4).							
30	7.5/15/20	C, 30A	3	OS30C12P	1SCA022471R9110	1	1.3
30	7.5/15/20	C, 30A	4	OS30C22N1P	1SCA022471R9370	1	1.6
30	7.5/15/20	C, 30A	4	OS30C22FP	1SCA022472R0380	1	1.6
60	15/30/50	C, 60A	3	OS60C12P	1SCA022434R8370	1	1.3
60	15/30/50	C, 60A	4	OS60C22N1P	1SCA022471R1470	1	1.6
60	15/30/50	C, 60A	4	OS60C22FP	1SCA022472R0200	1	1.6
Terminal width 15 mm							
100	30/60/75	C, 100A	3	OS100C12P	1SCA022483R4630	1	1.5
100	30/60/75	C, 100A	4	OS100C22N1P	1SCA022544R7130	1	1.8
100	30/60/75	C, 100A	4	OS100C22FP	1SCA022507R6990	1	1.8
Terminal width 20 mm							
100	30/60/75	C, 100A	3	OS100C12WP	1SCA022548R0260	1	1.5
100	30/60/75	C, 100A	4	OS100C22N1WP	1SCA022552R3410	1	1.8
100	30/60/75	C, 100A	4	OS100C22FWP	1SCA022552R3500	1	1.8
Mechanism at the end of the switch fuse							
Terminal width 15 mm							
100	30/60/75	C, 100A	3	OS100C03P	1SCA022456R8730	1	1.5
100	30/60/75	C, 100A	4	OS100C04N2P	1SCA022508R3930	1	1.8
100	30/60/75	C, 100A	4	OS100C04FP	1SCA022507R6810	1	1.8
Terminal width 20 mm							
100	30/60/75	C, 100A	3	OS100C03WP	1SCA022548R0000	1	1.5
100	30/60/75	C, 100A	4	OS100C04N2WP	1SCA022552R3760	1	1.8
100	30/60/75	C, 100A	4	OS100C04FWP	1SCA022552R3840	1	1.8

Shafts and handles included as standard

Suitable for switches	Included shaft	Included handle	Included terminal bolts
OS30…60	OXP6X161	OHB65J6	
OS100	OXP6X161	OHB65J6	M6X20
OS100_W	OXP6X161	OHB65J6	M8X25

F = Fused neutral

N1 = Non-fused neutral on the left side
N2 = Non-fused Neutral on the right side

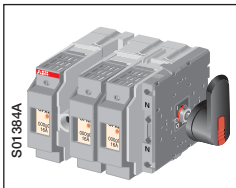

(OS Mini)
OS40FDS_

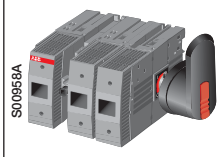

OS32...63DS30

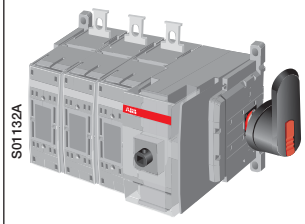

OS125...160DS30

Side operated switch fuses

Including terminal bolt kit (OS125...160), a black ON-OFF plastic handle and shaft as standard. The handle is IP65 protected, padlockable in the OFF-position and with door interlock in the ON-position. The shaft is adjustable for a range of installation depths.

Rated current AC-20...23 ≤ 690V [A]	Rated power AC-23 400/500/690V [kW]	Fuse size	Number of poles	Type	Order number	Units/ type [pcs]	Weight [kg]
Shaft mounting depths measured from the left side of the switch, 3-pole: H=157…164 mm and 4-pole: H= 193…200 mm. Protected tunnel terminals, IP20.							
40	18.5/22/30	000	3	OS40FDS30000	1SCA108942R1001	1	0.9
40	18.5/22/30	000	3[1)]	OS40FDS30000-N	1SCA109012R1001	1	0.9
40	18.5/22/30	000	4	OS40FDS40000N1	1SCA108954R1001	1	1.1
Shaft mounting depths measured from the left side of the switch, 3-pole: H=221…283 mm and 4-pole: H= 266...328 mm. Protected tunnel terminals, IP20. Terminal shroud OSS63G1 needed for maintaining IP20 rating for wire sizes <10mm^2.							
32	15/18.5/22	000,00	3	OS32DS30	1SCA022471R3090	1	1.3
32	15/18.5/22	000,00	4	OS32DS40N1	1SCA022471R6600	1	1.6
32	15/18.5/22	000,00	4	OS32DS40F	1SCA022472R0620	1	1.6
63	30/37/55	000,00	3	OS63DS30	1SCA022467R6970	1	1.3
63	30/37/55	000,00	4	OS63DS40N1	1SCA022471R5890	1	1.6
63	30/37/55	000,00	4	OS63DS40F	1SCA022472R0540	1	1.6
Terminal width 15 mm Shaft mounting depths measured from the left side of the switch, 3-pole:H=203…327 mm and 4-pole: H= 238…362 mm.							
125	55/75/110	000,00	3	OS125DS30	1SCA022502R6890	1	1.5
125	55/75/110	000,00	4	OS125DS40N1	1SCA022543R2370	1	1.8
125	55/75/110	000,00	4	OS125DS40N2	1SCA101627R1001	1	1.8
125	55/75/110	000,00	4	OS125DS40F	1SCA022502R6970	1	1.8
160	75/90/132	000,00	3	OS160DS30	1SCA022458R1830	1	1.5
160	75/90/132	000,00	4	OS160DS40N1	1SCA022537R6280	1	1.8
160	75/90/132	000,00	4	OS160DS40N2	1SCA022566R6280	1	1.8
160	75/90/132	000,00	4	OS160DS40F	1SCA022502R7430	1	1.8
Terminal width 20 mm Shaft mounting depths measured from the left side of the switch, 3-pole:H=203…327 mm and 4-pole: H= 238…362 mm.							
125	55/75/110	000,00	3	OS125DS30W	1SCA022538R3060	1	1.5
125	55/75/110	000,00	4	OS125DS40N1W	1SCA022543R2450	1	1.8
125	55/75/110	000,00	4	OS125DS40N2W	1SCA022552R3920	1	1.8
125	55/75/110	000,00	4	OS125DS40FW	1SCA022543R2290	1	1.8
160	75/90/132	000,00	3	OS160DS30W	1SCA022538R2410	1	1.5
160	75/90/132	000,00	4	OS160DS40N1W	1SCA022538R6590	1	1.8
160	75/90/132	000,00	4	OS160DS40N2W	1SCA022552R4060	1	1.8
160	75/90/132	000,00	4	OS160DS40FW	1SCA022538R6080	1	1.8

Shafts and handles included as standard

Suitable for switches	Included shaft	Included handle	Included terminal bolts
OS40FD_	OXP6X70-V0	OHB65J6	
OS32...63	OXP6X161	OHB65J6	
OS125...160	OXP6X161	OHB65J6	M6X20
OS125_W...160_W	OXP6X161	OHB65J6	M8X25

[1)] Detachable neutral link
F = Fused neutral
N1 = Non-fused neutral on the left side
N2 = Non-fused Neutral on the right side

Switch fuses, DIN-types
Ordering information

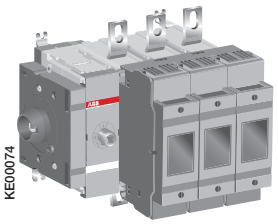

OS200DS03

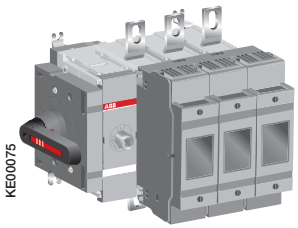

OS200DS03K

Side operated switch fuses without handle

Including terminal bolt kit. The handle and shaft have to be ordered separately.

Rated current AC-20...23 ≤ 690V [A]	Rated power AC-23 400/500/690V [kW]	Fuse size	Number of poles	Type	Order number	Units/ type [pcs]	Weight [kg]
200	110/132/200	0	3	OS200DS03	1SCA022871R0720	1	3.5
200	110/132/200	0	3	OS200DS30	1SCA022871R1370	1	3.5
200	110/132/200	0	4	OS200DS04F	1SCA022871R0990	1	4.4
200	110/132/200	0	4	OS200DS40F	1SCA022871R1530	1	4.4
250	145/170/250	0-1	3	OS250DS03	1SCA022860R3050	1	4.5
250	145/170/250	0-1	3	OS250DS30	1SCA022871R2180	1	4.5
250	145/170/250	0-1	4	OS250DS04F	1SCA022860R3210	1	5.3
250	145/170/250	0-1	4	OS250DS40F	1SCA022871R2340	1	5.3
400	230/280/400	0-2	3	OS400DS03	1SCA022860R3480	1	7.3
400	230/280/400	0-2	3	OS400DS30	1SCA022871R2850	1	7.3
400	230/280/400	0-2	4	OS400DS04F	1SCA022860R3640	1	9.3
400	230/280/400	0-2	4	OS400DS40F	1SCA022871R3070	1	9.3
630	355/450/630	3	3	OS630DS03	1SCA108128R1001	1	13.9
630	355/450/630	3	3	OS630DS30	1SCA108135R1001	1	13.9
630	355/450/630	3	4	OS630DS04F	1SCA108131R1001	1	16.8
630	355/450/630	3	4	OS630DS40F	1SCA108137R1001	1	16.8
800	450/560/710	3	3	OS800DS03	1SCA108092R1001	1	13.9
800	450/560/710	3	3	OS800DS30	1SCA108098R1001	1	13.9
800	450/560/710	3	4	OS800DS04F	1SCA108094R1001	1	16.8
800	450/560/710	3	4	OS800DS40F	1SCA108100R1001	1	16.8

Side operated switch fuses with direct mounted handle

Including terminal bolt kit, a black Test-ON-OFF plastic handle and shaft as standard. The handle is padlockable in the OFF-position.

Rated current AC-20...23 ≤ 690V [A]	Rated power AC-23 400/500/690V [kW]	Fuse size	Number of poles	Type	Order number	Units/ type [pcs]	Weight [kg]
200	110/132/200	0	3	OS200DS03K	1SCA022871R0810	1	3.6
200	110/132/200	0	3	OS200DS30K	1SCA022871R1450	1	3.6
200	110/132/200	0	4	OS200DS04FK	1SCA022871R1020	1	4.5
200	110/132/200	0	4	OS200DS40FK	1SCA022871R1610	1	4.5
250	145/170/250	0-1	3	OS250DS03K	1SCA022860R3130	1	4.6
250	145/170/250	0-1	3	OS250DS30K	1SCA022871R2260	1	4.6
250	145/170/250	0-1	4	OS250DS04FK	1SCA022860R3300	1	5.4
250	145/170/250	0-1	4	OS250DS40FK	1SCA022871R2420	1	5.4
400	230/280/400	0-2	3	OS400DS03K	1SCA022860R3560	1	7.5
400	230/280/400	0-2	3	OS400DS30K	1SCA022871R2930	1	7.5
400	230/280/400	0-2	4	OS400DS04FK	1SCA022860R3720	1	9.5
400	230/280/400	0-2	4	OS400DS40FK	1SCA022871R3150	1	9.5
630	355/450/630	3	3	OS630DS03K	1SCA108129R1001	1	14.1
630	355/450/630	3	3	OS630DS30K	1SCA108136R1001	1	14.1
630	355/450/630	3	4	OS630DS04FK	1SCA108132R1001	1	17
630	355/450/630	3	4	OS630DS40FK	1SCA108138R1001	1	17
800	450/560/710	3	3	OS800DS03K	1SCA108093R1001	1	14.1
800	450/560/710	3	3	OS800DS30K	1SCA108093R1001	1	14.1
800	450/560/710	3	4	OS800DS04FK	1SCA108095R1001	1	17
800	450/560/710	3	4	OS800DS40FK	1SCA108101R1001	1	17

Terminal bolts included as standard

Switch size	Included terminal bolts
OS200	M8x25
OS250...400	M10x30
OS630…800	M12x40

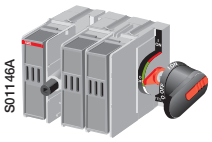

(OSMini)
OS20...32FBS30A1
OS32FBS30A2
OS32FBS30F1

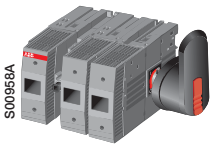

OS32...63BS30

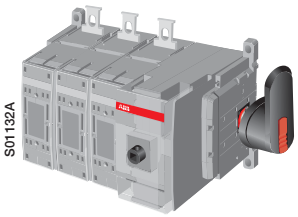

OS100...160BS30

Side operated switch fuses

Including terminal bolt kit (OS100...160), a black ON-OFF plastic handle and shaft as standard. The handle is IP65 protected, padlockable in the OFF-position and with door interlock in the ON-position. The shaft is adjustable for a range of installation depths.

Rated current AC-20...23 ≤ 690V [A]	Rated power AC-23 415/500/690V [kW]	Fuse size	Number of poles	Type	Order number	Units/ type [pcs]	Weight [kg]
Shaft mounting depths measured from the left side of the switch, 3-pole:H=154…166 mm and 4-pole: H= 189…201 mm. Protected tunnel terminals, IP20.							
20	7.5/11/15	A1	3	OS20FBS30A1	1SCA108997R1001	1	0.7
20	7.5/11/15	A1	4	OS20FBS40A1N1	1SCA108998R1001	1	0.9
32	15/18.5/22	A1	3	OS32FBS30A1	1SCA108877R1001	1	0.7
32	15/18.5/22	A1	4	OS32FBS40A1N1	1SCA109006R1001	1	0.9
32	15/18.5/22	A2	3	OS32FBS30A2	1SCA108882R1001	1	0.7
32	15/18.5/22	A2	4	OS32FBS40A2N1	1SCA109007R1001	1	0.9
32	15/18.5/22	F1	3	OS32FBS30F1	1SCA109004R1001	1	0.7
32	15/18.5/22	F1	4	OS32FBS40F1N1	1SCA109005R1001	1	0.9
Shaft mounting depths measured from the left side of the switch, 3-pole: H=221…283 mm and 4-pole: H= 266...328 mm. Protected tunnel terminals, IP20, cable size 2.5…25 mm². Terminal shroud OSS63G1 needed for maintaining IP20 rating for wire sizes < 10 mm².							
32	15/18.5/22	A2, A3	3	OS32BS30	1SCA022471R6940	1	1.3
32	15/18.5/22	A2, A3	4	OS32BS40N1	1SCA022471R7410	1	1.6
63	30/37/55	A2, A3	3	OS63BS30	1SCA022471R0150	1	1.3
63	30/37/55	A2, A3	4	OS63BS40N1	1SCA022471R7320	1	1.6
Terminal width 15 mm							
Shaft mounting depths measured from the left side of the switch, 3-pole:H=203…327 mm and 4-pole: H= 238…362 mm.							
100	55/55/90	A2, A3	3	OS100BS30	1SCA022508R3000	1	1.5
100	55/55/90	A2, A3	4	OS100BS40N1	1SCA022544R7480	1	1.8
100	55/55/90	A2, A3	4	OS100BS40N2	1SCA022544R7560	1	1.8
125	55/75/110	A2, A3, A4[1)]	3	OS125BS30	1SCA022508R3340	1	1.5
125	55/75/110	A2, A3, A4[1)]	4	OS125BS40N1	1SCA022544R7720	1	1.8
125	55/75/110	A2, A3, A4[1)]	4	OS125BS40N2	1SCA022544R7810	1	1.8
160	75/90/132	A2, A3, A4[1)]	3	OS160BS30	1SCA022508R3260	1	1.5
160	75/90/132	A2, A3, A4[1)]	4	OS160BS40N1	1SCA022544R8020	1	1.8
160	75/90/132	A2, A3, A4[1)]	4	OS160BS40N2	1SCA022544R8110	1	1.8
Terminal width 20 mm							
Shaft mounting depths measured from the left side of the switch, 3-pole:H=203…327 mm and 4-pole: H= 238…362 mm.							
100	55/55/90	A2, A3	3	OS100BS30W	1SCA022548R3010	1	1.5
100	55/55/90	A2, A3	4	OS100BS40N1W	1SCA022552R4140	1	1.8
100	55/55/90	A2, A3	4	OS100BS40N2W	1SCA022552R4490	1	1.8
125	55/75/110	A2, A3, A4[1)]	3	OS125BS30W	1SCA022548R1310	1	1.5
125	55/75/110	A2, A3, A4[1)]	4	OS125BS40N1W	1SCA022552R4220	1	1.8
125	55/75/110	A2, A3, A4[1)]	4	OS125BS40N2W	1SCA022552R4570	1	1.8
160	75/90/132	A2, A3, A4[1)]	3	OS160BS30W	1SCA022548R1230	1	1.5
160	75/90/132	A2, A3, A4[1)]	4	OS160BS40N1W	1SCA022552R4310	1	1.8
160	75/90/132	A2, A3, A4[1)]	4	OS160BS40N2W	1SCA022552R4650	1	1.8

Shafts and handles included as standard

Suitable for switches	Included shaft	Included handle	Included terminal bolts
OS20...32 (OS Mini)	OXP6X70-V0	OHB65J6	
OS32...63	OXP6X161	OHB65J6	
OS100...160	OXP6X161	OHB65J6	M6X20
OS100_W...160_W	OXP6X161	OHB65J6	M8X25

[1)] Max. diameter 32 mm

N1 = Non-fused neutral on the left side
N2 = Non-fused neutral on the right side

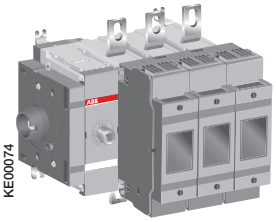

OS200BS03

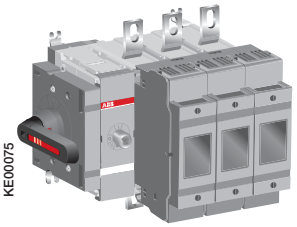

OS200BS03K

Side operated switch fuses without handle

Including terminal bolt kit. The handle and shaft have to be ordered separately.

Rated current AC-20...23 ≤ 690V [A]	Rated power AC-23 415/500/690V [kW]	Fuse size	Number of poles	Type	Order number	Units/ type [pcs]	Weight [kg]
200	110/132/200	B1-B2	3	OS200BS03	1SCA022860R3810	1	3.5
200	110/132/200	B1-B2	3	OS200BS30	1SCA022870R7770	1	3.5
200	110/132/200	B1-B2	4	OS200BS04N2	1SCA022870R7510	1	4.4
200	110/132/200	B1-B2	4	OS200BS40N2	1SCA022870R8150	1	4.4
250	145/170/250	B1-B3	3	OS250BS03	1SCA022860R4370	1	4.5
250	145/170/250	B1-B3	3	OS250BS30	1SCA022870R8580	1	4.5
250	145/170/250	B1-B3	4	OS250BS04N2	1SCA022870R8310	1	5.3
250	145/170/250	B1-B3	4	OS250BS40N2	1SCA022870R8910	1	5.3
315	180/220/315	B1-B4	3	OS315BS03	1SCA022860R4700	1	7.3
315	180/220/315	B1-B4	3	OS315BS30	1SCA022870R9390	1	7.3
315	180/220/315	B1-B4	4	OS315BS04N2	1SCA022870R9120	1	9.3
315	180/220/315	B1-B4	4	OS315BS40N2	1SCA022870R9710	1	9.3
400	230/280/400	B1-B4	3	OS400BS03	1SCA022860R5180	1	7.3
400	230/280/400	B1-B4	3	OS400BS30	1SCA022871R0130	1	7.3
400	230/280/400	B1-B4	4	OS400BS04N2	1SCA022870R9980	1	9.3
400	230/280/400	B1-B4	4	OS400BS40N2	1SCA022871R0560	1	9.3
630	355/450/630	C1-C2	3	OS630BS03	1SCA108141R1001	1	13.9
630	355/450/630	C1-C2	3	OS630BS30	1SCA108147R1001	1	13.9
630	355/450/630	C1-C2	4	OS630BS04N2	1SCA108145R1001	1	16.8
630	355/450/630	C1-C2	4	OS630BS40N2	1SCA108152R1001	1	16.8
800	450/560/710	C1-C3	3	OS800BS03	1SCA108076R1001	1	13.9
800	450/560/710	C1-C3	3	OS800BS30	1SCA108083R1001	1	13.9
800	450/560/710	C1-C3	4	OS800BS04N2	1SCA108081R1001	1	16.8
800	450/560/710	C1-C3	4	OS800BS40N2	1SCA108086R1001	1	16.8

Side operated switch fuses with direct mounted handle

Including terminal bolt kit, a black Test-ON-OFF plastic handle and shaft as standard. The handle is padlockable in the OFF-position.

Rated current AC-20...23 ≤ 690V [A]	Rated power AC-23 415/500/690V [kW]	Fuse size	Number of poles	Type	Order number	Units/ type [pcs]	Weight [kg]
200	110/132/200	B1-B2	3	OS200BS03K	1SCA022860R3990	1	3.6
200	110/132/200	B1-B2	3	OS200BS30K	1SCA022870R7850	1	3.6
200	110/132/200	B1-B2	4	OS200BS04N2K	1SCA022870R7690	1	4.5
200	110/132/200	B1-B2	4	OS200BS40N2K	1SCA022870R8230	1	4.5
250	145/170/250	B1-B3	3	OS250BS03K	1SCA022860R4450	1	4.6
250	145/170/250	B1-B3	3	OS250BS30K	1SCA022870R8660	1	4.6
250	145/170/250	B1-B3	4	OS250BS04N2K	1SCA022870R8400	1	5.4
250	145/170/250	B1-B3	4	OS250BS40N2K	1SCA022870R9040	1	5.4
315	180/220/315	B1-B4	3	OS315BS03K	1SCA022860R4880	1	7.5
315	180/220/315	B1-B4	3	OS315BS30K	1SCA022870R9470	1	7.5
315	180/220/315	B1-B4	4	OS315BS04N2K	1SCA022870R9210	1	9.5
315	180/220/315	B1-B4	4	OS315BS40N2K	1SCA022870R9800	1	9.5
400	230/280/400	B1-B4	3	OS400BS03K	1SCA022860R5260	1	7.5
400	230/280/400	B1-B4	3	OS400BS30K	1SCA022871R0210	1	7.5
400	230/280/400	B1-B4	4	OS400BS04N2K	1SCA022871R0050	1	9.5
400	230/280/400	B1-B4	4	OS400BS40N2K	1SCA022871R0640	1	9.5
630	355/450/630	C1-C2	3	OS630BS03K	1SCA108142R1001	1	14.1
630	355/450/630	C1-C2	3	OS630BS30K	1SCA108148R1001	1	14.1
630	355/450/630	C1-C2	4	OS630BS04N2K	1SCA108146R1001	1	17
630	355/450/630	C1-C2	4	OS630BS40N2K	1SCA108151R1001	1	17
800	450/560/710	C1-C3	3	OS800BS03K	1SCA108077R1001	1	14.1
800	450/560/710	C1-C3	3	OS800BS30K	1SCA108084R1001	1	14.1
800	450/560/710	C1-C3	4	OS800BS04N2K	1SCA108082R1001	1	17
800	450/560/710	C1-C3	4	OS800BS40N2K	1SCA108087R1001	1	17

Terminal bolts included as standard

Switch size	Included terminal bolts
OS200	M8x25
OS250...400	M10x30
OS630...800	M12x40

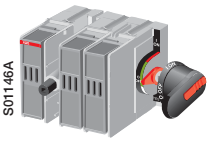

(OSMini)
OS25...32FFS30_

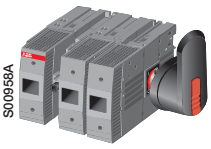

OS50...63FS_

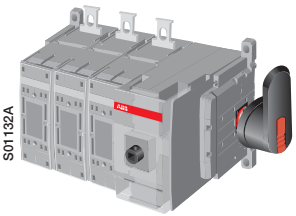

OS100...125FS30

Side operated switch fuses

Including terminal bolt kit (OS100...125), a black ON-OFF plastic handle and shaft as standard. The handle is IP65 protected, padlockable in the OFF-position and with door interlock in the ON-position. The shaft is adjustable for a range of installation depths.

Rated current AC-20...23 ≤ 690V [A]	Rated power AC-23 400/500/690V [kW]	Fuse size	Number of poles	Type	Order number	Units/ type [pcs]	Weight [kg]
Shaft mounting depths measured from the left side of the switch, 3-pole: H=154…166 mm and 4 pole: H=189…201 mm. Protected tunnel terminals, IP20.							
25	11/15/22	10x38	3	OS25FFS3010	1SCA108639R1001	1	0.7
25	11/15/22	10x38	4	OS25FFS4010N1	1SCA108661R1001	1	0.9
25	11/15/22	10x38	4	OS25FFS4010F	1SCA108640R1001	1	0.9
32	15/18.5/22	14x51	3	OS32FFS3014	1SCA108646R1001	1	0.7
32	15/18.5/22	14x51	4	OS32FFS4014N1	1SCA108649R1001	1	0.9
32	15/18.5/22	14x51	4	OS32FFS4014F	1SCA108647R1001	1	0.9
Shaft mounting depths measured from the left side of the switch, 3-pole: H=221…283 mm and 4-pole: H= 266...328 mm. Protected tunnel terminals, IP20. Terminal shroud OSS63G1 needed for maintaining IP20 rating for wire sizes <10mm^2.							
50	22/30/37	14x51	3	OS50FS30	1SCA022471R1040	1	1.3
50	22/30/37	14x51	4	OS50FS40N1	1SCA022471R9610	1	1.6
50	22/30/37	14x51	4	OS50FS40F	1SCA022472R1190	1	1.6
63	30/37/55	22x58	3	OS63FS30	1SCA022471R0910	1	1.3
63	30/37/55	22x58	4	OS63FS40N1	1SCA022471R9530	1	1.6
63	30/37/55	22x58	4	OS63FS40F	1SCA022472R0970	1	1.6
Terminal width 15 mm							
Shaft mounting depths measured from the left side of the switch, 3-pole: H=203…327 mm and 4-pole:H= 238…362 mm.							
100	55/55/90	22x58	3	OS100FS30	1SCA022502R6620	1	1.5
100	55/55/90	22x58	4	OS100FS40N1	1SCA022544R8370	1	1.8
100	55/55/90	22x58	4	OS100FS40N2	1SCA022544R8450	1	1.8
100	55/55/90	22x58	4	OS100FS40F	1SCA022502R6710	1	1.8
125	55/75/110	22x58	3	OS125FS30	1SCA022502R7270	1	1.5
125	55/75/110	22x58	4	OS125FS40N1	1SCA022544R8530	1	1.8
125	55/75/110	22x58	4	OS125FS40N2	1SCA022544R8610	1	1.8
125	55/75/110	22x58	4	OS125FS40F	1SCA022502R7350	1	1.8
Terminal width 20 mm							
Shaft mounting depths measured from the left side of the switch, 3-pole: H=203…327 mm and 4-pole: H= 238…362 mm.							
100	55/55/90	22x58	3	OS100FS30W	1SCA022547R8010	1	1.5
100	55/55/90	22x58	4	OS100FS40N1W	1SCA022552R5030	1	1.8
100	55/55/90	22x58	4	OS100FS40N2W	1SCA022552R5200	1	1.8
100	55/55/90	22x58	4	OS100FS40FW	1SCA022552R5540	1	1.8
125	55/75/110	22x58	3	OS125FS30W	1SCA022547R2080	1	1.5
125	55/75/110	22x58	4	OS125FS40N1W	1SCA022552R5110	1	1.8
125	55/75/110	22x58	4	OS125FS40N2W	1SCA022552R5380	1	1.8
125	55/75/110	22x58	4	OS125FS40FW	1SCA022552R5460	1	1.8

Shafts and handles included as standard

Suitable for switches	Included shaft	Included handle	Included terminal bolts
OS25...32	OXP6X70 - V0	OHB65J6	
OS50...63	OXP6X161	OHB65J6	
OS100...125	OXP6X161	OHB65J6	M6X20
OS100_W...125_W	OXP6X161	OHB65J6	M8X25

F = Fused neutral

N1 = Non-fused neutral on the left side
N2 = Non-fused neutral on the right side

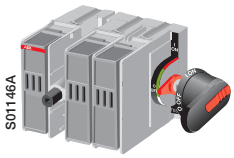

(OSMini)
OS16...35FDS30_

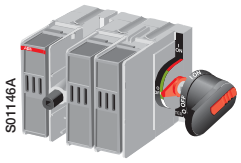

(OSMini)
OS30FA_

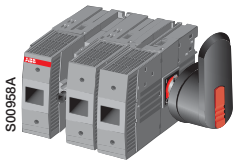

OS60JS_

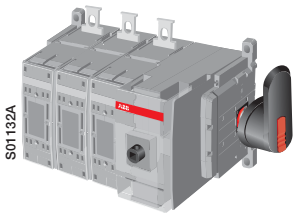

OS100JS_

Side operated switch fuses, Neozed-types

Including a handle and shaft as standard. The handle is IP65 protected, padlockable in the OFF-position and with door interlock in the ON-position. The shaft is adjustable for a range of installation depths.

Rated current AC-20...23 ≤ 690V [A]	Rated power AC-23 400/500/690V [kW]	Fuse size	Number of poles	Type	Order number	Units/ type [pcs]	Weight [kg]
Shaft mounting depths measured from the left side of the switch, 3-pole: H=154…166 mm and 4-pole: H=189…201 mm. Protected tunnel terminals, IP20.							
16	7.5/7.5/11	DO 1[1)]	3	OS16FDS3001	1SCA108994R1001	1	0.7
16	7.5/7.5/11	DO 1[1)]	4	OS16FDS4001N1	1SCA108995R1001	1	0.9
16	7.5/7.5/11	DO 1[1)]	4	OS16FDS4001F	1SCA108996R1001	1	0.9
35	15/22/30	DO 2	3	OS35FDS3002	1SCA109009R1001	1	0.7
35	15/22/30	DO 2	4	OS35FDS4002N1	1SCA109010R1001	1	0.9
35	15/22/30	DO 2	4	OS35FDS4002F	1SCA109011R1001	1	0.9

Side operated fusible disconnect switches, UL- and CSA-types

Including terminal bolt set (OS100), a black ON-OFF plastic handle and shaft as standard. The handle is IP65 protected, padlockable in the OFF-position and with door interlock in the ON-position. The shaft is adjustable for a range of installation depths. Fuse standards UL 198C.

Ampere rating [A]	Horse power ratings 3 phase 240/480/600V [HP]	Fuse type, size	Number of poles	Type	Order number	Units/ type [pcs]	Weight [kg]
Shaft mounting depths measured from the left side of the switch, 3-pole: H=154…166 mm and 4-pole: H= 189…201 mm. Protected tunnel terminals, IP20.							
30	7.5/15/20	CC, 30A	3	OS30FACCS30P	1SCA108999R1001	1	0.7
30	7.5/15/20	J, 30A	3	OS30FAJS30P	1SCA108838R1001	1	0.7
Including a black handle OHB65J6, with I-0 and ON-OFF -indication (IP65) and a shaft OXP161x6 (length 161mmm). Mounting depths measured from the left side of the switch, 3-pole: H=221…283 mm and 4-pole: H= 266...328 mm. Protected tunnel terminals, IP20. Terminal shroud OSS63G1 needed for maintaining IP20 rating for wire sizes <10mm², (AWG 14 - 4).							
60	15/30/50	J, 60A	3	OS60JS30P	1SCA022471R0580	1	1.3
60	15/30/50	J, 60A	4	OS60JS40N1P	1SCA022471R9880	1	1.6
60	15/30/50	J, 60A	4	OS60JS40FP	1SCA022472R1430	1	1.6
Terminal width 15 mm, terminal bolt kit M6X20							
Shaft mounting depths measured from the left side of the switch, 3-pole: H=203…327 mm and 4-pole: H= 238…362 mm.							
100	30/60/75	J, 100A	3	OS100JS30P	1SCA022508R3510	1	1.5
100	30/60/75	J, 100A	4	OS100JS40N1P	1SCA022544R8700	1	1.8
100	30/60/75	J, 100A	4	OS100JS40N2P	1SCA022544R8880	1	1.8
100	30/60/75	J, 100A	4	OS100JS40FP	1SCA022544R8960	1	1.8
Terminal width 20 mm, terminal bolt kit M8X25							
Shaft mounting depths measured from the left side of the switch, 3-pole: H=203…327 mm and 4-pole: H= 238…362 mm. Include terminal bolt kit M8x25.							
100	30/60/75	J, 100A	3	OS100JS30WP	1SCA022547R5510	1	1.5
100	30/60/75	J, 100A	4	OS100JS40N1WP	1SCA022552R5620	1	1.8
100	30/60/75	J, 100A	4	OS100JS40N2WP	1SCA022552R5710	1	1.8
100	30/60/75	J, 100A	4	OS100JS40FWP	1SCA022552R5890	1	1.8

Shafts and handles included as standard

Suitable for switches	Included shaft	Included handle	Included terminal bolts
OS16...35FD_ , OS30FA_	OXP6X70-V0	OHB65J6	
OS60	OXP6X161	OHB65J6	
OS100	OXP6X161	OHB65J6	M6X20
OS100_W	OXP6X161	OHB65J6	M8X25

[1)] Use Neozed DO2 adaptor ring
F = Fused neutral
N1 = Non-fused neutral on the left side
N2 = Non-fused neutral on the right side

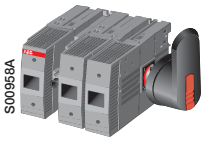

OS30...60CS_

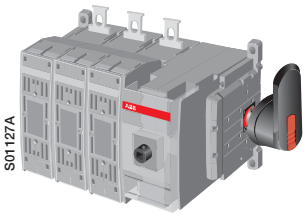

OS100CS_

Side operated fusible disconnect switches

Including terminal bolt set (OS100), a black ON-OFF plastic handle and shaft as standard. The handle is IP65 protected, padlockable in the OFF-position and with door interlock in the ON-position. The shaft is adjustable for a range of installation depths. Fuse standards CSA CS40.2 No 106.

Ampere rating [A]	Horse power ratings 3 phase 240/480/600V [HP]	Fuse type, size	Number of poles	Type	Order number	Units/ type [pcs]	Weight [kg]
Shaft mounting depths measured from the left side of the switch, 3-pole: H=221…283 mm and 4-pole: H= 266...328 mm. Protected tunnel terminals, IP20. Terminal shroud OSS63G1 needed for maintaining IP20 rating for wire sizes <10mm², (AWG 14 - 4).							
30	7.5/15/20	C, 30A	3	OS30CS30P	1SCA022471R9290	1	1.3
30	7.5/15/20	C, 30A	4	OS30CS40N1P	1SCA022471R9700	1	1.6
30	7.5/15/20	C, 30A	4	OS30CS40FP	1SCA022472R1350	1	1.6
60	15/30/50	C, 60A	3	OS60CS30P	1SCA022471R0310	1	1.3
60	15/30/50	C, 60A	4	OS60CS40N1P	1SCA022471R9450	1	1.6
60	15/30/50	C, 60A	4	OS60CS40FP	1SCA022472R1270	1	1.6
Terminal width 15 mm							
Shaft mounting depths measured from the left side of the switch, 3-pole: H=203…327 mm and 4-pole: H= 238…362 mm.							
100	30/60/75	C, 100A	3	OS100CS30P	1SCA022508R3420	1	1.5
100	30/60/75	C, 100A	4	OS100CS40N1P	1SCA022544R9000	1	1.8
100	30/60/75	C, 100A	4	OS100CS40N2P	1SCA022544R9180	1	1.8
100	30/60/75	C, 100A	4	OS100CS40FP	1SCA022544R9260	1	1.8
Terminal width 20 mm							
Shaft mounting depths measured from the left side of the switch, 3-pole: H=203…327 mm and 4-pole: H= 238…362 mm.							
100	30/60/75	C, 100A	3	OS100CS30WP	1SCA022548R1150	1	1.5
100	30/60/75	C, 100A	4	OS100CS40N1WP	1SCA022552R5970	1	1.8
100	30/60/75	C, 100A	4	OS100CS40N2WP	1SCA022552R6010	1	1.8
100	30/60/75	C, 100A	4	OS100CS40FWP	1SCA022552R6600	1	1.8

Shafts and handles included as standard

Suitable for switches	Included shaft	Included handle	Included terminal bolts
OS30...60_	OXP6X161	OHB65J6	
OS100	OXP6X161	OHB65J6	M6X20
OS100_W	OXP6X161	OHB65J6	M8X25

F = Fused neutral

N1 = Non-fused neutral on the left side
N2 = Non-fused neutral on the right side

Switch fuses OS 16...63
Accessories, selection overview

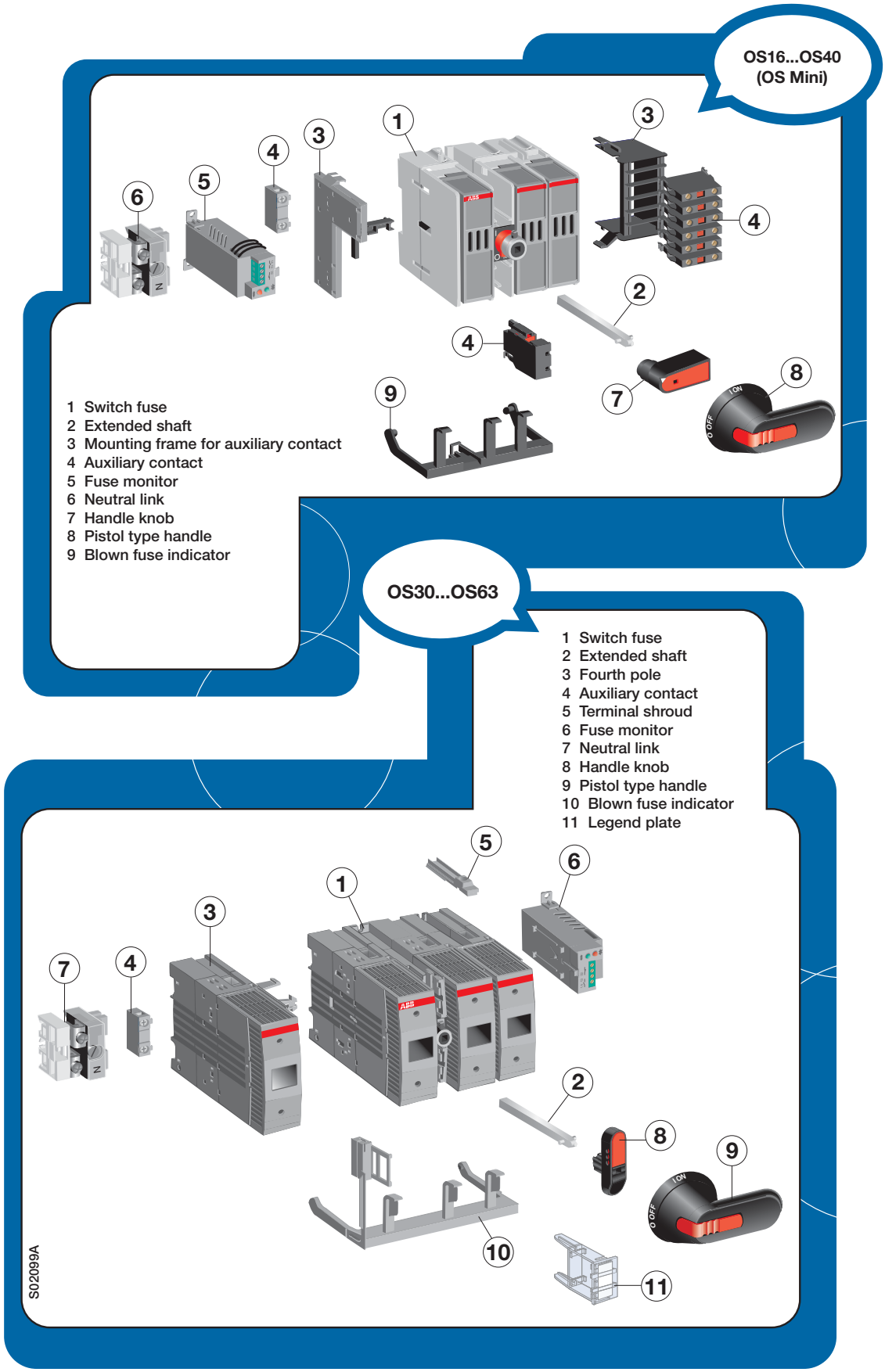

OS100...OS160

1 Switch fuse
2 Extended shaft
3 Auxiliary contact
4 Terminal clamp
5 Terminal shroud
6 Fuse monitor
7 Neutral link
8 Handle knob
9 Pistol type handle
10 Blown fuse indicator

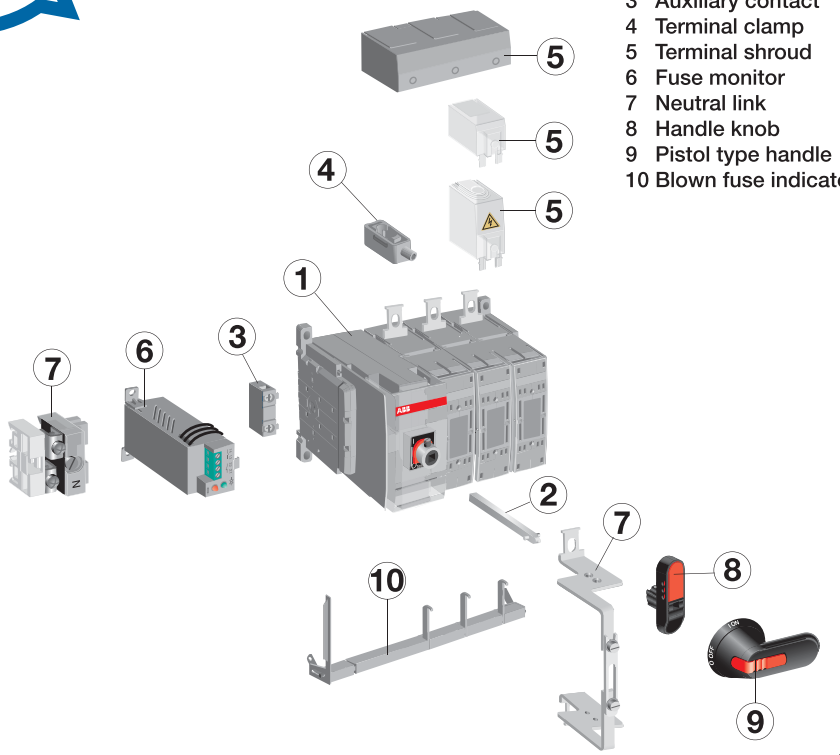

OS200...OS1250

1 Switch fuse
2 Extended shaft
3 Terminal clamp
4 Fourth pole
5 Terminal shroud
6 Module for auxiliary contacts
7 Auxiliary contact
8 Fuse monitor
9 Pistol type handle
10 Direct mounted handle
11 Detachable neutral link

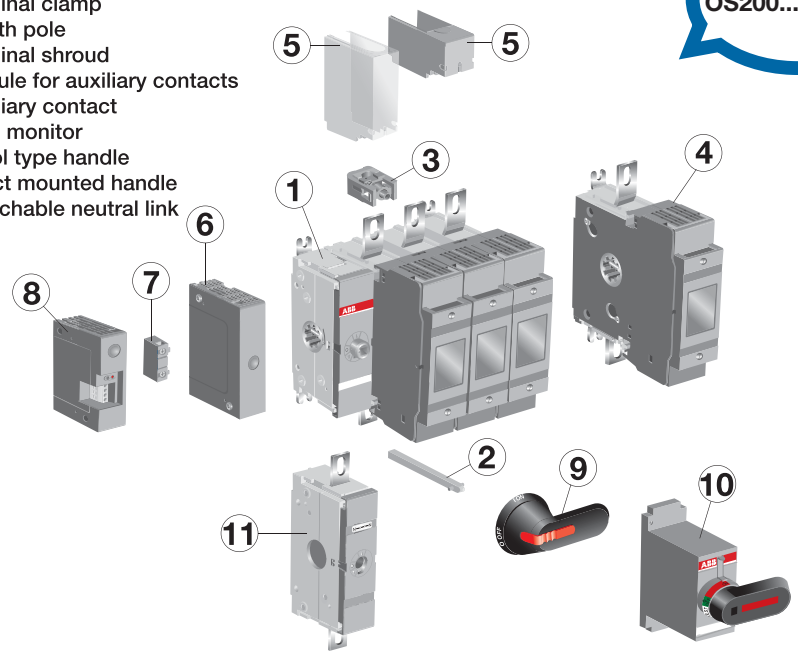

S02100A





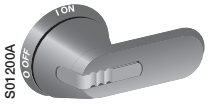

OH_65J_

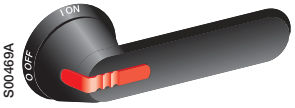

OH_



OHB_P



OHM_

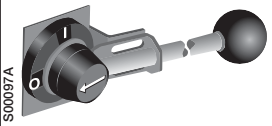

YASDA_

Optional handles, IP 65

For front operated switch fuses

Padlockable with 3 padlocks in the OFF-position, door interlock in the ON-position. Units/type = 1 pcs.
Screw fixing from the back side of the handle, no screws on the front, ensures double protection.

Colour	Handle length [mm]	Type	Order number	Delivery batch [pcs]	Weight /unit [kg]
For shaft diameter 6 mm (for OSMini...250). Plastic handles, black and red-yellow: I-O/ON-OFF, grey: I-O.					
Black	65	OHB65J6	1SCA022380R9660	100	0.12
Red-Yellow	65	OHY65J6	1SCA022380R9820	100	0.12
Grey	65	OHG65J6	1SCA022380R9740	100	0.12
Plastic handles, black and red-yellow: Test/I-O/ON-OFF, grey: Test/I-O.					
Black	65	OHB65J6T	1SCA022399R8110	100	0.12
Red-Yellow	65	OHY65J6T	1SCA022456R9540	100	0.12
Grey	65	OHG65J6T	1SCA022456R9620	100	0.12
Stainless steel handles: I-O/ON-OFF, padlockable with 3 padlocks in the OFF-position, door interlock in the ON-position, IP66 (NEMA 4X)					
Metallic	65	OHM65L6	1SCA022739R1070	1	0.73
For shaft diameter 12 mm (for OS315...400) Plastic handles, black and red-yellow: I-O/ON-OFF, grey: I-O.					
Black	95	OHB95J12	1SCA022381R0830	90	0.16
Red-Yellow	95	OHY95J12	1SCA022381R1050	90	0.16
Grey	95	OHG95J12	1SCA022381R0910	90	0.16
Indication: Test-OFF-ON/Test-O-I					
Black	95	OHB95J12T	1SCA022736R1750	90	0.16
Red-Yellow	95	OHY95J12T	1SCA022736R1910	90	0.16
For shaft diameter 12 mm (for OS630...800). Plastic handles, black and red-yellow: I-O/ON-OFF, grey: I-O.					
Black	125	OHB125J12	1SCA022381R1560	90	0.16
Red-Yellow	125	OHY125J12	1SCA022381R1720	90	0.16
Grey	125	OHG125J12	1SCA022381R1640	90	0.16
Black	145	OHB145J12	1SCA022381R2110	90	0.17
Red-Yellow	145	OHY145J12	1SCA022381R2370	90	0.17
Grey	145	OHG145J12	1SCA022381R2290	90	0.17
Black	175	OHB175J12	1SCA022381R2450	90	0.18
Red-Yellow	175	OHY175J12	1SCA022381R2700	90	0.18
Grey	175	OHG175J12	1SCA022381R2610	90	0.18
Indication: Test-OFF-ON/Test-O-I					
Black	125	OHB125J12T	1SCA022652R2220	90	0.16
Red-Yellow	125	OHY125J12T	1SCA022652R2310	90	0.16
Black	145	OHB145J12T	1SCA022652R2570	90	0.17
Red-Yellow	145	OHY145J12T	1SCA022652R2650	90	0.17
Black	175	OHB175J12T	1SCA022708R0740	90	0.18
For shaft diameter 12 mm (for OS1200...1250). Plastic handles, black and red-yellow: I-O/ON-OFF.					
Black	2x150	OHB150J12P	1SCA022865R9430	50	0.17
Red-Yellow	2x150	OHY150J12P	1SCA101586R1001	50	0.17
Black	2x200	OHB200J12P	1SCA022865R9510	50	0.40
Red-Yellow	2x200	OHY200J12P	1SCA101587R1001	50	0.40
Indication: Test-OFF-ON/Test-O-I					
Black	2x200	OHB200J12PT	1SCA106510R1001	50	0.40
Red-Yellow	2x200	OHY200J12PT	1SCA111512R1001	50	0.40
Stainless steel handles: I-O/ON-OFF, padlockable with 3 padlocks in the OFF-position, door interlock in the ON-position, IP66 (NEMA 4X)					
Metallic	125	OHM125L12	1SCA022739R1150	1	0.76
Metallic	175	OHM175L12	1SCA022739R1230	1	0.83
Metallic	275	OHM275L12	1SCA022832R4840	1	0.96
Metallic handles, padlockable with 3 padlocks in OFF-position, door interlock in the ON-position.					
Black 1-0	220	YASDA 7	1SCA022071R3010	1	0.70
Black ON-OFF	220	YASDA 8	1SCA022071R3270	1	0.70
Black I-0	320	YASDA35	1SCA104400R1001	1	0.80

- **Door interlocking in the ON-position means that the door cannot be opened, when the handle is in the ON-position. This can be defeated to allow authorized personnel access for inspection.**
- **Handles padlockable in all positions are available on request.**

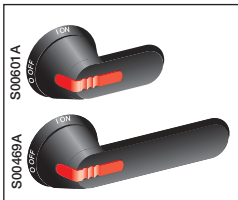

OH_

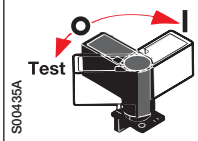

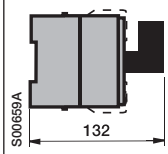

OHBS5



OHB4

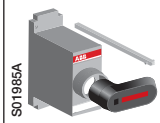

OSV_

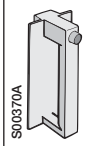

OFAE504



OFAE505



OHZX14

Optional handles

For side operated switch fuses, IP 65

For mounting on the side of the enclosure. Padlockable with three padlocks in the OFF-position, door interlock in the ON-position, IP 65. The position indications are rotated 90°. If the handle is mounted on the front of the door, a standard handle can be used as well.

Colour	Handle length [mm]	Type	Order number	Units/ type [pcs]	Weight [kg]
For shaft diameter 6 mm (for OS Mini) Plastic handles, black and red-yellow: Test/I-O/ON-OFF, grey: Test/I-O.					
Black	65	OHB65J6TE00S	1SCA109016R1001	1	0.12
Red-yellow	65	OHY65J6TE00S	1SCA022688R0140	1	0.12
Grey	65	OHG65J6TE00S	1SCA109014R1001	1	0.12
For shaft diameter 6 mm (for OS30...160) Plastic handles, black and red-yellow: Test/I-O/ON-OFF, grey: Test/I-O.					
Black	65	OHB65J6TE001S	1SCA022532R2190	1	0.12
Red-yellow	65	OHY65J6TE001S	1SCA022532R2270	1	0.12
Grey	65	OHG65J6TE001S	1SCA022532R2350	1	0.12

Direct mounted handles

Plastic handles, panel board handle, can be padlocked in the O-position. Includes a special shaft. The handle can also be used with a standard shaft as padlocking device.

For front operated OS Mini

Indication I-O/ON-OFF/TEST. Handle padlockable with 2 padlocks in the O- and Test-positions when the door is open. Max. bail dia 8 mm.

Black		OHBS5	1SCA109015R1001	1	0.05

For side operated OS Mini and front operated OS 30...160

Padlockable with three padlocks in the O- position when the door is open. Max. bail dia 6 mm.

Black		OHB4	1SCA022439R4050	1	0.05

For front operated OS 200...1250

Test OFF-ON/Test O-I indication
Padlockable with three padlocks in the OFF-position. Includes shaft and mechanism cover.

Suitable for switches	Colour	Type	Order number	Units/ type [pcs]	Weight [kg]
OS200D…250D/B_K	Black	OSV250DK	1SCA022763R3510	1	0.16
	Yellow-red	OSVY250DK	1SCA022778R6500	1	0.16
OS200B/J_K	Black	OSV200BK	1SCA022779R7530	1	0.14
	Yellow-red	OSVY200BK	1SCA022779R7700	1	0.14
OS400D_K	Black	OSV400DK	1SCA022763R4230	1	0.34
	Yellow-red	OSVY400DK	1SCA022779R5590	1	0.34
OS315…400B/J_K	Black	OSV400BK	1SCA022763R3930	1	0.33
	Yellow-red	OSVY400BK	1SCA022779R5830	1	0.33
OS600…800_K	Black	OSV800DK	1SCA107794R1001	1	1.1
	Yellow-red	OSVY800DK	1SCA108703R1001	1	1.1
OS1200...OS1250_K	Black	OSV1250DK	1SCA107797R1001	1	1.5
	Yellow-red	OSVY1250DK	1SCA108702R1001	1	1.5

Fuse replacement handles

For DIN-fuse sizes	Description	Type	Order number	Units/ type [pcs]	Weight [kg]
000,00,1,2,3	Compact	OFAE 504	1SCA022007R6880	1	0.16
000,00,1,2,3	690 V	OFAE 505	1SCA022137R0770	1	0.80

Extension ring for pistol type handles

Colour	Suitable for handles	Type	Order number	Delivery batch [pcs]	Weight unit [kg]
Black	OHB_	OHZX14	1SCA022851R6590	1	0.06

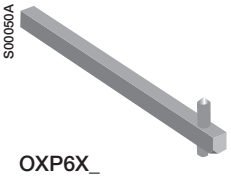

OXP6X_

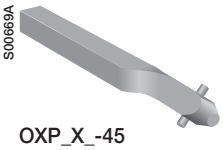

OXP_X_-45

Extended shafts

Units/type = 1 piece





Shaft length (mm)	Front operated H / mm	Side operated H / mm	Type	Order number	Delivery batch [pcs]	Weight /unit [kg]
For OS 16...35 (Mini) [2], shaft diameter 6 mm						
150	135...210	154...166	OXP6X150[5]	1SCA022295R5600	10	0.05
170	155...230	174...186	OXP6X170	1SCA108224R1001	10	0.05
265	250...325	269...281	OXP6X265	1SCA108225R1001	10	0.08
400	385...460	404...416	OXP6X400	1SCA108226R1001	10	0.12
150	135...210	154...166	OXP6X150-45[1]	1SCA022294R4400	10	0.05
170	155...230	174...186	OXP6X170-45[1]	1SCA108227R1001	10	0.05
265	380...460	269...281	OXP6X265-45[1]	1SCA108228R1001	10	0.08
400	380...460	404...416	OXP6X400-45[1]	1SCA108229R1001	10	0.12
For OS 40 (Mini) [2], shaft diameter 6 mm						
150	135...210	235...243	OXP6X150[5]	1SCA022295R5600	10	0.05
170	155...230	255...363	OXP6X170	1SCA108224R1001	10	0.05
265	250...325	352...360	OXP6X265	1SCA108225R1001	10	0.08
400	385...460	487...495	OXP6X400	1SCA108226R1001	10	0.12
150	135...210	235...243	OXP6X150-45[1]	1SCA022294R4400	10	0.05
170	155...230	255...363	OXP6X170-45[1]	1SCA108227R1001	10	0.05
265	250...325	352...360	OXP6X265-45[1]	1SCA108228R1001	10	0.08
400	385...460	487...495	OXP6X400-45[1]	1SCA108229R1001	10	0.12
For OS 30...63 [4], shaft diameter 6 mm						
150	130...249	210...272	OXP6X150	1SCA022295R5600	10	0.05
161	141...260	221...283	OXP6X161[3]	1SCA022067R1760	10	0.05
210	190...309	270...332	OXP6X210	1SCA022295R6080	10	0.06
290	270...389	350...412	OXP6X290	1SCA022042R6370	10	0.08
360	340...459	420...482	OXP6X360	1SCA022042R6530	10	0.10
430	410...529	490...552	OXP6X430	1SCA022056R6030	10	0.12
210	190...309	270...332	OXP6X210-45[1]	1SCA022294R4230	10	0.06
290	270...389	350...412	OXP6X290-45[1]	1SCA022304R4290	10	0.08
360	340...459	420...482	OXP6X360-45[1]	1SCA022341R4640	10	0.10
For OS 100...160 [4], shaft diameter 6 mm						
150	140...252	202,5...316	OXP6X150	1SCA022295R5600	10	0.05
161	140...263	202,5...327	OXP6X161[3]	1SCA022067R1760	10	0.05
210	189...312	206...376	OXP6X210	1SCA022295R6080	10	0.06
290	269...392	286...456	OXP6X290	1SCA022042R6370	10	0.08
360	339...462	345...515	OXP6X360	1SCA022042R6530	10	0.10
430	409...532	415...585	OXP6X430	1SCA022056R6030	10	0.12
210	189...312	206...376	OXP6X210-45[1]	1SCA022294R4230	10	0.06
290	269...392	286...456	OXP6X290-45[1]	1SCA022304R4290	10	0.08
360	339...462	345...515	OXP6X360-45[1]	1SCA022341R4640[1]	10	0.10
For OS 200...250 DIN-type, shaft diameter 6 mm						
161	160...205		OXP6X161	1SCA022067R1760	10	0.05
210	189...254		OXP6X210 [3]	1SCA022295R6080	10	0.06
290	269...334		OXP6X290	1SCA022042R6370	10	0.08
For OS 200...250 BS-type, shaft diameter 6 mm						
161	140…205		OXP6X161	1SCA022067R1760	10	0.05
210	189…254		OXP6X210 [3]	1SCA022295R6080	10	0.06
290	269…334		OXP6X290	1SCA022042R6370	10	0.08

[1] The shaft position is rotated 45 degrees
[2] Side operated, 4-pole: add 36 mm
[3] Included as standard
[4] Side operated, 4-pole: OS 30...63: add 45 mm, OS 100...160: add 35 mm
[5] Included as standard in front operated types

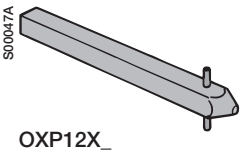

OXP12X_

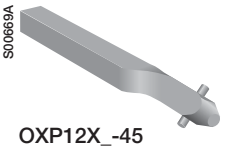

OXP12X_-45

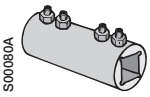

OETLZX95

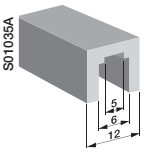

OETLZK19

Extended shafts



Shaft length (mm)	Front operated H / mm	Type	Order number	Units/ type [pcs]	Weight [kg]
For OS 315...400, shaft diameter 12 mm					
250	230…325	OXP12X250 [2]	1SCA022325R6980	1	0.30
280	260…355	OXP12X280	1SCA022137R5140	1	0.30
325	305…400	OXP12X325	1SCA022042R5810	1	0.36
395	375…470	OXP12X395	1SCA022042R5990	1	0.43
465	445…540	OXP12X465	1SCA022042R6020	1	0.51
535	515…610	OXP12X535	1SCA022042R6110	1	0.59
For OS 630...800, shaft diameter 12 mm					
280	258...382	OXP12X280[2]	1SCA022137R5140	1	0.30
325	303...427	OXP12X325	1SCA022042R5810	1	0.40
395	373...497	OXP12X395	1SCA022042R5990	1	0.50
465	443...567	OXP12X465	1SCA022042R6020	1	0.60
535	513...637	OXP12X535	1SCA022042R6110	1	0.70
280	258...382	OXP12X280-45[1]	1SCA022382R0800	1	0.30
325	303...427	OXP12X325-45[1]	1SCA022304R4450	1	0.40
For OS 1200...1250, shaft diameter 12 mm					
395	371…500	OXP12X395	1SCA022042R5990	1	0.43
465	441…570	OXP12X465	1SCA022042R6020	1	0.51
535	511…640	OXP12X535	1SCA022042R6110	1	0.59

Shaft extension socket

For extending the shaft of combination attachment.

Suitable for shaft with diameter [mm]	Type	Order number	Units/ type [pcs]	Weight [kg]
12	OETLZX95	1SCA022083R5620	1	0.04

Adapters for extension socket

Adapters to place inside of OETLZX 95 to connect shafts of different sizes.

6/6, 6/12	OETLZK19	1SCA022093R1850	1	0.02

[1] The shaft position is rotated 45 degrees
[2] Included as standard in front operated P-types

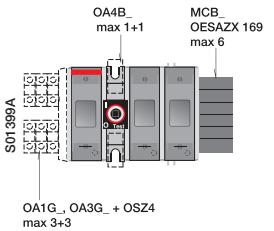

OS Mini

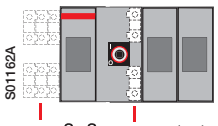

OS 30...60

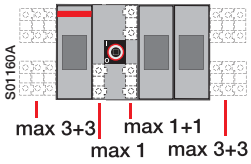

OS 100...200



OA_G

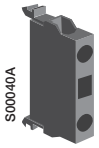

MCB_

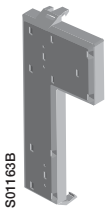

OSZ4

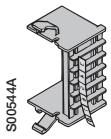

OESAZX169

Auxiliary contacts

Description	Type	Order number	Units/type [pcs]	Weight [kg]
Auxiliary contacts for OS Mini				
Mounting to the switch mechanism, auxiliary/test contacts. Max. two change over contacts.				
Change over contacts				
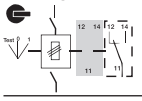 Handle position: Test / 0 / I; Main contacts: open / open / closed; Aux. / Test contacts N.O.: closed / open / closed	OA4B1C	1SCA022193R0150	1	0.03
Single pole contacts > 3 mm contact gap.				
1 NO 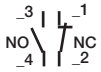	OA4B10	1SCA022276R9050	1	0.03
1 NC	OA4B01	1SCA022276R9210	1	0.03
Mounting on the side of the switch with aux.contact frame OESAZX 169.				
1NO 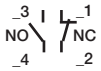	MCB-10	1SCA022150R5110	1	0.03
1NC	MCB-01	1SCA022150R5370	1	0.03

Auxiliary contacts for OS Mini and for OS 30...160

Snap-on mounting on the switch, IP20.
Early-break type. All NO contacts are provided with a positive opening feature. Units/type = 1 piece.

Description	Suitable for	Type	Order number	Delivery batch [pcs]	Weight /unit [kg]
1 NO 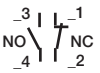	All	OA1G10	1SCA022353R4970	10	0.03
1 NC	All	OA3G01	1SCA022456R7410	10	0.03
1 NO	OS 30...63	OA5G10	1SCA022660R2760	10	0.03
1 NC	OS 30...63	OA6G01	1SCA022670R4500	10	0.03

For OS Mini:

Max. 6 auxiliary contacts mountable onto the left side with the mounting frame OSZ4.

For OS 30...63:

Max. 9 auxiliary contacts mountable onto the left side, of which 3 contacts can be used as test indication contacts. NO test indication contact is OA5G10 and NC test indication contact is OA6G10.
No frames needed. Max. 2 auxiliary contacts mountable between the poles, which can be used as Test-contacts.

For OS 100...160:

Max. 6 auxiliary contacts per switch side mountable on to the side (OS100...160 B_: The left side is used for 3 Test-contacts and 3 Test-indication contacts). No frames needed. Max. 3 auxiliary contacts mountable between the poles, of which two contacts can be used as Test-contacts and one contact is used as Test -indication contact.

Function charts for OS 30...160

Between poles

Handle position	Main contacts	Aux. / Test contacts N.O.	Test indication[1] contact N.O.
Test	open	closed	closed
0	open	open	open
I	closed	closed	open

1) Only in types OS 100...160

Side of Switch

Handle position	Main contacts	Aux. / Test contacts N.O.	Test indication[2] contacts N.O.
Test	open	open	closed
0	open	open	open
I	closed	closed	open

2) In types OS 30...63 and OS 100...160B

Mounting frames for auxiliary contacts of OS Mini

Frame for auxiliary contacts OA1G10 and OA3G01 and for fuse monitor. Max. 6 auxiliary contacts can be fitted.

	Type	Order number	Units/type [pcs]	Weight [kg]
Mounting on the left side of the switch	OSZ4	1SCA022530R0200	1	0.06
Frame for MCB-_ auxiliary contacts. Not suitable for side operated switches. Max. 6 auxiliary contacts can be fitted.				
Mounting on the right side of the switch	OESAZX169	1SCA022196R9360	1	0.06



OEA28 OA_G_

Auxiliary contacts

Mounting under the mechanism cover:

The “test” contacts operate in ON- and OFF-positions as well as when the handle is turned to TEST-position = 45 degrees over the OFF-position. The “test indication” contacts operate only when the handle is turned to TEST-position. See the function table below. The OA1G10 (N.O.) or OA3G01 (N.C.) auxiliary contact blocks can be used as standard auxiliary contacts, “test” or “test indication” contacts. The desired functions are achieved when an auxiliary contact block is installed in a speciific place shown in the mounting instruction. In order to activate the “test” and “test indication” features a handle with test function is required. See the optional handles, page 33.

Function table of OS200…1250 auxiliary contacts

Handle position	Main contacts	Aux./Test contacts N.O.	Test indication contacts N.O.
Test	open	closed	closed
0	open	open	open
I	closed	closed	open

Maximum number of contact blocks, “Aux./test” contacts and “test indication” contacts, see the table below. Standard versions include all except for N3-types which are equipped with integrated neutral through the mechanism.

Maximum number of auxiliary contacts under the mechanism cover

	OS200…250		OS315…800		OS1200…1250	
Pole version	Standard	N3	Standard	N3	Standard	N3
Maximum number of contact blocks	4	0	8	4	12	8
Aux./Test contacts	4	0	4	2	8	6
Test indication contacts	2	0	4	2	4	2

The contact timing: see the chart, page 66.

Mounting on the left side of the switch fuse:

Maximum 8 auxiliary contact blocks (N.O. or N.C.) with the OEA28 module.

Auxiliary contacts for OS 200...1250

Suitable for switches	Description	Protection degree	Type	Order number	Units/Weight type [pcs]	[kg]
OS200...1250	1NO	IP20	OA1G10	1SCA022353R4970	1	0.03
	1NC	IP20	OA3G01	1SCA022456R7410	1	0.03
Module for auxiliary contacts						
Screw mounting to the left side of the switch			OEA28	1SCA022714R8810	1	0.04

Performance data for auxiliary contacts

OA1G_, OA3G_, OA5G_, OA6G_
IEC60947-5-1

U_i/[V]	690
Uimp/[kV]	4
Pollution degree	3
I_{th}/[A]	16
Cable size	1…2 x 0,75…2,5mm²
Maximum fuse	16A/gG
NEMA	A600, R300
Wire size	18 - 14AWG, 1(2)

	AC15		DC12		DC13	
Ue/[V]	Ie/[A]	Ue/[V]	Ie/[A]	P/[W]	Ie/[A]	P/[W]
230	6	24	10	240	2	48
400	4	72	4	288	0.8	58
690	2	125	2	250	0.55	69
		250	0,55	138	0.27	68
		440	0.1	44		

OA4_
EN61058-1

U_i	400V
I_{th}	10A
Ie	400V AC
	10 (4) A, 10E3
	6 (2,5) A, 50E3
NEMA	10 A, 125-250V AC, 1/4 HP
M3 Screw connection	

MCB_
IEC60947-5-1

U_i	690V			
I_{th}	10A			
		AC12	AC15	DC13
Ie	24V	10	8	5
	110V	10	8	1.1
	220/240V	10	6	0.55
	250V		4	0.55
	380/415V		4	
	660/690V		2	
NEMA	A600, 10A, 600VAC			

Fourth poles, neutral and earth terminals
Ordering information

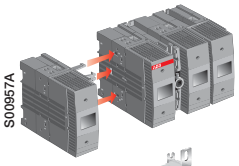

OSP4_



OSP

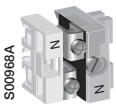

OSZ1, 2

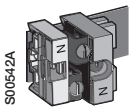

OESAZX171



OSN_160_

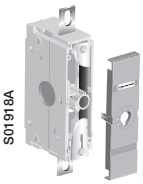

OXN_



OESAZX_

Fourth Poles

Snap-on mounting to the side of the switch.

Suitable for 3-pole switches	Mounting side	Type	Order number	Units/ type [pcs]	Weight [kg]
Fusible 4. poles					
OS32D_, OS63D_	Left	OSP4D	1SCA022472R7630	1	0.36
OS32B_, OS63B_	Left	OSP4B	1SCA022472R7980	1	0.36
OS50F_	Left	OSP4F14	1SCA022472R8280	1	0.36
OS63F_	Left	OSP4F22	1SCA022472R8360	1	0.36
OS30C_, OS60C_	Left	OSP4C	1SCA022472R8010	1	0.36
OS60J_	Left	OSP4J	1SCA022472R8100	1	0.36
OS200B	Left/right	OSP200B	1SCA022735R9180	1	1.20
OS200D	Left/right	OSP200D	1SCA022735R8960	1	1.20
OS250B	Left/right	OSP250B	1SCA022770R4030	1	1.20
OS250D	Left/right	OSP250D	1SCA022735R9340	1	1.20
OS315B…400B	Left/right	OSP400B	1SCA022770R3140	1	2.00
OS400D	Left/right	OSP400D	1SCA022770R3220	1	2.00
OS630...800D	Left/right	OSP800D	1SCA100433R1001	1	4.20
OS630...800B	Left/right	OSP800B	1SCA100434R1001	1	4.20
OS1250D	Left/right	OSP1250D	1SCA107946R1001	1	3.60
OS1250B	Left/right	OSP1250B	1SCA107950R1001	1	3.80
Switched 4. poles					
OS30_...OS63_	Left	OSP4N	1SCA022472R7710	1	0.36
OS200_	Left/right	OSP200N	1SCA022735R8700	1	1.20
OS250_	Left/right	OSP250N	1SCA022735R9260	1	1.20
OS400_	Left/right	OSP400N	1SCA022770R3490	1	1.20
OS630...800	Left/right	OSP800N	1SCA100432R1001	1	4.40
OS1200...1250	Left/right	OSP1250N	1SCA107943R1001	1	3.80

Neutral links

Max. wire	H/W/D [mm]	Mounting holes	Type	Order number	Units/type [pcs]	Weight [kg]
For OS Mini and OS 32...63						
Detachable, mounting on the side of the switch, on the mounting plate or DIN-rail.						
16 mm² Cu	39/41/40	ø 4.2, distance 32	OESAZX171	1SCA022197R2580	1	0.15
For OS 30...160						
Detachable, mounting onto the base plate or DIN-rail.						
16 mm² Cu	39/41/40	ø 4.2, distance 32	OSZ1	1SCA022481R3710	1	0.06
35 mm² Cu	39/44/45	ø 4.2, distance 35	OSZ2	1SCA022481R3800	1	0.07
For OS 100...160						
Detachable, mounting on the top of the mechanism. N-terminal distance to L1-terminal = identical to phase-to-phase terminal distance. Terminal bolt kit included.						
Terminal width 15 mm			OSN160	1SCA022560R2390	1	0.16
Terminal width 20 mm			OSN160W	1SCA022561R0810	1	0.16
For OS 200...1250						
Mounting with screws (included) onto either side of the switch or on the base plate.						
OS200...250			OXN250	1SCA022752R9950	1	0.40
OS315…400			OXN400	1SCA022770R3060	1	0.70
OS630…800			OXN800S	1SCA022831R4880	1	1.20
OS1250			OXN1250S	1SCA104163R1001	1	2.5

Neutral links

I_{th} [A]	Terminal size (WxD) [mm]; bolt size	Type	Order number	Units/ type [pcs]	Weight [kg]
Mounting separately to the base plate					
250	12x3 M6	OESAZX162	1SCA022193R0400	1	0.12
315	20x3 M8	OESAZX164	1SCA022202R9520	1	0.10
400	25x4 M10	OESAZX165	1SCA022202R9790	1	0.12
1000	40x5 M12	OESAZX160	1SCA022186R3960	1	1.00



OFAW00

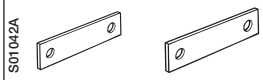

OESAZG5, OESAZS36

OESAZK98, OESAZL79

Solid links

Suitable for	Type	Order number	Units/ type [pcs]	Weight [kg]
OS 20FB...OS 32FB_A1	OESAZG98	1SCA022354R9650	1	0.01
OS 32D...OS 160D	OFAW00	1SCA022003R9680	1	0.08
OS 32FB_A2...OS 100B	OESAZG5	1SCA022057R1380	1	0.02
OS 125B...OS 160B	OESAZS36	1SCA022044R4600	1	0.02
OS 200...400 B	OESAZK98	1SCA022067R7370	1	0.24
OS 630 B...800 B	OESAZL79	1SCA022067R7110	1	0.64
OS 250 D	OFAW1	1SCA022003R9760	1	0.15
OS 400 D	OFAW2	1SCA022003R9840	1	0.24
OS 630/800 D	OFAW3	1SCA022003R9920	1	0.28

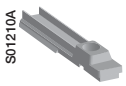

OSS63G1

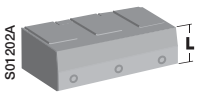

OSS160G3_



OSS160T1_



OSS_L

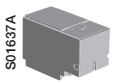

OSS_S

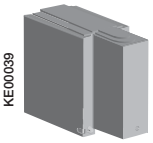

OSS800_1L



OSS800_1S

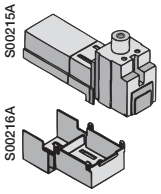

OZXB2K

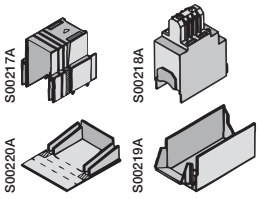

OZXB3K

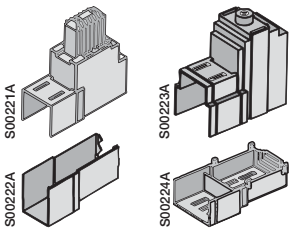

OZXB4K OZXB5K



OSZ 6

Terminal shrouds

Suitable for switches	Description (L/mm)	Type	Order number	Units/ type [pcs]	Weight [kg]
An optional **single pole shroud** is needed for maintaining IP20 rating for wire sizes <10 mm². One package is needed for full protection (3-pole switches). Snap-on fitting.					
OS30...63		OSS63G1	1SCA022533R6730	6	0.02
Single pole terminal shroud, IP20. Snap-on fitting provided with knock-outs. For cable lug connections. Transparent.					
OS100...160	67.5	OSS160T1	1SCA022502R8830	1	0.02
Three pole terminal shroud, IP20. Snap on fitting provided with knock-outs. Suitable for types ...03 or ...30. Grey.					
OS100...160	34	OSS160G3	1SCA022556R1420	1	0.04
Single pole terminal shroud, IP20. Snap-on fitting provided with knock-outs. Low type. Transparent.					
OS100...160	34	OSS160T1L	1SCA022556R1260	1	0.02
Pack of single pole terminal shrouds, snap-on mounting, grey plastic, IP 3X.Transparent shrouds available on request.					
OS200	Long type	OSS200G1L/3	1SCA022731R8910	3	0.09
	Short type	OSS200G1S/3	1SCA022732R0130	3	0.06
	Long type	OSS200G1L/4	1SCA022731R9040	4	0.12
	Short type	OSS200G1S/4	1SCA022732R0050	4	0.08
OS250	Long type	OSS250G1L/3	1SCA022731R9390	3	0.09
	Short type	OSS250G1S/3	1SCA022731R9550	3	0.06
	Long type	OSS250G1L/4	1SCA022731R9470	4	0.12
	Short type	OSS250G1S/4	1SCA022731R9630	4	0.08
OS315...400	Long type	OSS400G1L/3	1SCA022776R6650	3	0.18
	Short type	OSS400G1S/3	1SCA022776R6900	3	0.10
	Long type	OSS400G1L/4	1SCA022776R6730	4	0.25
	Short type	OSS400G1S/4	1SCA022776R7030	4	0.15
OS630...800	Long type	OSS800G1L/3	1SCA022776R7200	3	0.53
	Short type	OSS800G1S/3	1SCA022776R7540	3	0.21
	Long type	OSS800G1L/4	1SCA022776R7380	4	0.70
	Short type	OSS800G1S/4	1SCA022776R7460	4	0.28
OS1200...1250	Long type	OSS1250G1L/3	1SCA107938R1001	3	0.76
	Short type	OSS1250G1S/3	1SCA107939R1001	3	0.40
	Long type	OSS1250G1L/4	1SCA107940R1001	4	1.00
	Short type	OSS1250G1S/4	1SCA107941R1001	4	0.52
Terminal shrouds suitable for mechanisms with detachable integrated neutral (N3 versions).					
OS200…250_N3_	Long type	OTS250G1L	1SCA022715R5340	1	0.03
	Short type	OTS250G1S	1SCA022715R5260	1	0.02
OS315…400_N3_	Long type	OSS250G1L	1SCA022727R5080	1	0.03
	Short type	OSS250G1S	1SCA022727R4940	1	0.02
OS630…800_N3_	Long type	OTS800G1L	1SCA022776R7710	1	0.10
	Short type	OTS800G1S	1SCA022776R8010	1	0.06
OS1200...1250_N3_	Long type	OTS1600G1L	1SCA106134R1001	1	0.20
	Short type	OTS1600G1S	1SCA102667R1001	1	0.12

Single pole terminal shroud for terminal clamps, snap-on mounting, transparent plastic, IP 2X.

Suitable for terminal clamps	Type	Order number	Units/ type [pcs]	Weight [kg]
OZXB2, 2L	OZXB2K	1SCA022264R0010	1	0.05
OZXB3, 4	OZXB3K	1SCA022264R0440	1	0.20
OZXB5, 6	OZXB4K	1SCA022199R2850	1	0.24
OZXB7, 7L	OZXB5K	1SCA022283R8040	1	0.13

Legend plate

Mounted into the mounting holes of the auxiliary contacts in the mechanism. Prevents access to live parts through the switch board door.

Suitable for switches	Type	Order number	Units/ type [pcs]	Weight [kg]
OS30...63	OSZ6	1SCA022637R6220	2	0.002

Protection plug

Rubber plug that prevents touching of terminal screws when the fuse cover is removed. Order quantity minimum six pieces.

OS30...63	OSS63B1	1SCA022645R8460	1	0.02



OZXA7



OSZA15

Connecting accessories

Suitable for switches	Cable cross section [mm²]	Type	Order number	Units/ type [pcs]	Weight [kg]
Terminal clamp set for Cu-cables, terminal width 15 mm					
OS100...160	1,5...10	OZXA16	1SCA022024R4340	6	0.08
	10...70	OZXA7	1SCA022052R2760	6	0.15
Terminal clamp sets for Al/Cu-cables, terminal width: 15 mm (OZXB 1), 20 mm (OZXB 2)					
OS100...160	10..70	OZXB1	1SCA022169R2030	3	0.11
	25...120	OZXB2	1SCA022119R7610	3	0.34
Connection kit between OS 100...160 and ABB type A 145...185 contactors The kit includes three tin coated adapter pieces, M8x30 screws and washers.					
Suitable for OS-types: -03, -04, -30, -13N1, -31N2.		OSZA15	1SCA022509R0120	1	0.17


S00177A
OZXB1L


S01806A
OZXB8, 9

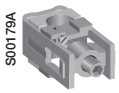
S00179A
OZXB2

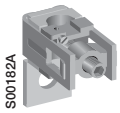
S00182A
OZXB2L, 7L

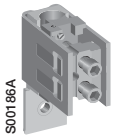
S00186A
OZXB3, 5

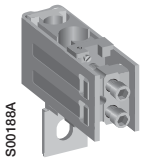
S00188A
OZXB4, 6

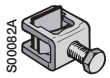
S00082A
OZXA11

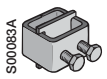
S00083A
OZXA14

Terminal clamp sets for Al- and Cu-cables

Suitable for switches	Cable cross section [mm²]	Suitable shroud	Type	Order number	Units/ type [pcs]	Weight [kg]
OS 200	10...70	OSS200_L	OZXB 1L	1SCA022169R2030	3	0.15
	10...70	OSS200_L	OZXB 1L/1	1SCA022194R0030	1	0.05
	25...120	OZXB2K	OZXB 2	1SCA022119R7610	3	0.34
	25...120	OZXB2K	OZXB 2/1	1SCA022194R0200	1	0.12
	25...120	OZXB2K	OZXB 2L	1SCA022158R7750	3	0.42
	25...120	OZXB2K	OZXB 2L/1	1SCA022194R0460	1	0.14
	95...185	OSS200_L	OZXB8	1SCA022744R1510	3	0.50
	95...185	OSS200_L	OZXB8/1	1SCA022744R1600	1	0.17
	95...240	OSS200_L	OZXB9	1SCA022750R3210	3	0.50
	95...240	OSS200_L	OZXB9/1	1SCA022750R3300	1	0.17
OS 250	25...120	OZXB2K	OZXB 2L	1SCA022158R7750	3	0.42
	25...120	OZXB2K	OZXB 2L/1	1SCA022194R0460	1	0.14
	95...185	OZXB3K	OZXB 3	1SCA022136R8100	3	1.30
	95...185	OZXB3K	OZXB 3/1	1SCA022194R0620	1	0.44
	2x(95...185)	OZXB3K	OZXB 4	1SCA022137R4760	3	1.70
	2x(95...185)	OZXB3K	OZXB 4/1	1SCA022194R0890	1	0.57
	120...300	OZXB4K	OZXB 5	1SCA022137R2470	3	2.30
	120...300	OZXB4K	OZXB 5/1	1SCA022194R1010	1	0.77
	120...240	OZXB5K	OZXB 7L	1SCA022185R7130	3	1.20
	120...240	OZXB5K	OZXB7L/1	1SCA022194R1600	1	0.40
	95...185	OSS250_L	OZXB8	1SCA022744R1510	3	0.50
	95...185	OSS250_L	OZXB8/1	1SCA022744R1600	1	0.17
	95...240	OSS250_L	OZXB9	1SCA022750R3210	3	0.50
	95...240	OSS250_L	OZXB9/1	1SCA022750R3300	1	0.17
OS315...400	25...120	OSS400_L	OZXB2L	1SCA022158R7750	3	0.42
	25...120	OSS400_L	OZXB2L/1	1SCA022194R0460	1	0.14
	95...185	OZXB3K	OZXB3	1SCA022136R8100	3	1.30
	95...185	OZXB3K	OZXB3/1	1SCA022194R0620	1	0.44
	2x(95...185)	OZXB3K	OZXB4	1SCA022137R4760	3	1.70
	2x(95...185)	OZXB3K	OZXB4/1	1SCA022194R0890	1	0.57
	120...300	OZXB4K	OZXB5	1SCA022137R2470	3	2.30
	120...300	OZXB4K	OZXB5/1	1SCA022194R1010	1	0.77
	2x(120...300)	OZXB4K	OZXB6	1SCA022137R4920	3	3.03
	2x(120...300)	OZXB4K	OZXB6/1	1SCA022194R1270	1	1.00
	120...240	OZXB5K	OZXB7	1SCA022185R0040	3	1.00
	120...240	OZXB5K	OZXB7/1	1SCA022194R1430	1	0.34
	95...185	OSS400_L	OZXB8	1SCA022744R1510	3	0.50
	95...185	OSS400_L	OZXB8/1	1SCA022744R1600	1	0.17
	95...240	OSS400_L	OZXB9	1SCA022750R3210	3	0.50
	95...240	OSS400_L	OZXB9/1	1SCA022750R3300	1	0.17
OS630...800	95...185	OSS800_L	OZXB3	1SCA022136R8100	3	1.30
	95...185	OSS800_L	OZXB3/1	1SCA022194R0620	1	0.44
	2x(95...185)	OSS800_L	OZXB4	1SCA022137R4760	3	1.70
	2x(95...185)	OSS800_L	OZXB4/1	1SCA022194R0890	1	0.57
	120...300	OSS800_L	OZXB5	1SCA022137R2470	3	2.30
	120...300	OSS800_L	OZXB5/1	1SCA022194R1010	1	0.77
	2x(120...300)	OSS800_L	OZXB6	1SCA022137R4920	3	3.03
	2x(120...300)	OSS800_L	OZXB6/1	1SCA022194R1270	1	1.00
	120...240	OSS800_L	OZXB7L	1SCA022185R7130	3	1.20
	120...240	OSS800_L	OZXB7L/1	1SCA022194R1600	1	0.40
	95...185	OSS800_L	OZXB8	1SCA022744R1510	3	0.50
	95...185	OSS800_L	OZXB8/1	1SCA022744R1600	1	0.17
	95...240	OSS800_L	OZXB9	1SCA022750R3210	3	0.50
	95...240	OSS800_L	OZXB9/1	1SCA022750R3300	1	0.17
OS1250	95...185	OTS1600_L	OZXB3	1SCA022136R8100	3	1.30
	95...185	OTS1600_L	OZXB3/1	1SCA022194R0620	1	0.44
	2x(95...185)	OTS1600_L	OZXB4	1SCA022137R4760	3	1.70
	2x(95...185)	OTS1600_L	OZXB4/1	1SCA022194R0890	1	0.57
	120...300	OTS1600_L	OZXB5	1SCA022137R2470	3	2.30
	120...300	OTS1600_L	OZXB5/1	1SCA022194R1010	1	0.77
	2x(120...300)	OTS1600_L	OZXB6	1SCA022137R4920	3	3.03
	2x(120...300)	OTS1600_L	OZXB6/1	1SCA022194R1270	1	1.00
	120...240	OTS1600_L	OZXB7L	1SCA022185R7130	3	1.20
	120...240	OTS1600_L	OZXB7L/1	1SCA022194R1600	1	0.40
	95...185	OTS1600_L	OZXB8	1SCA022744R1510	3	0.50
	95...185	OTS1600_L	OZXB8/1	1SCA022744R1600	1	0.17
	95...240	OTS1600_L	OZXB9	1SCA022750R3210	3	0.50
	95...240	OTS1600_L	OZXB9/1	1SCA022750R3300	1	0.17

Terminal clamp set for Cu-cables

OS 315...400	70...120		OZXA11	1SCA022025R6940	6	0.54
OS 630...800	95...240		OZXA14	1SCA022008R7810	6	1.20

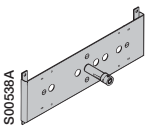

OW_6DS_



OESAZW2



OETLZW9



OESAZW1



OTZW25, OETLZW11

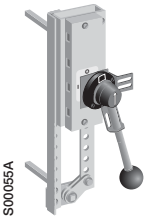

OETLZW12



OTZW26



OETLZW13

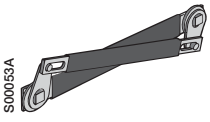

OETLZW3, 14, 15

Conversion kits for front operated combination switches

Suitable for switches	Remarks	Shaft distance [mm]	Type	Order number	Units/ type [pcs]	Weight [kg]
6 and 8-pole switch mechanism						
Parallel attachment for connecting 3- and 4-pole switches. The switches work simultaneously.						
6-pole switches						
OS Mini	Two 3-pole switches needed.		OWP6DS1	1SCA105255R1001	1	0.69
8-pole switches						
OS Mini	Two 4-pole switches needed.		OWP6DS2	1SCA105256R1001	1	0.69
The attachment levers are provided with holes, enabling different shaft distances. The combination switches can be mounted either horizontally or vertically.						
OS 30-250	Two 3- or 4-pole switches needed	45+(0-13)x15	OESAZW2	1SCA022078R1600	1	0.37
OS315-400	Two 3- or 4-pole switches needed	60+(0-19)x20	OETLZW9	1SCA022061R3300	1	1.1
Change-over switch mechanism						
Two switches connected with a mechanism operating into I-O-II positions.						
OS Mini	Two 3-pole switches needed		OWC6DSH1	1SCA105251R1001	1	1.0
OS Mini	Two 4-pole switches needed		OWC6DSH2	1SCA105252R1001	1	1.0
OS30-63	Two 3- or 4-pole switches needed	90+(0 - 10)x15	OESAZW1	1SCA022064R3710	1	0.78
OS100-250	Two 3- or 4-pole switches needed	210+(0 - 18)x20	OTZW25	1SCA022778R6920	1	2.8
OS315-400	Two 3- or 4-pole switches needed	210+(0 - 11)x20	OETLZW11	1SCA022078R0030	1	3.0
OS315-400	Two 3- or 4-pole switches needed	210+(0 - 20)x20	OETLZW12	1SCA022078R0200	1	4.6
By-pass switch mechanism						
A combination of two switches in parallel with a third switch for change-over operation to pass- by, for example, a breaker for maintenance. The by-pass attachment can be used together with another combination attachment.						
OS100 - 250	Three 3- or 4-pole switches needed	Between 1 and 2: 210+(0 - 9)x20 Between 1 and 3: 250+(0 - 9)x20	OTZW26	1SCA022778R7060	1	3.3
OS315-400	Three 3- or 4-pole switches needed	Between 1 and 2: 210+(0 - 18)x20 Between 1 and 3: 250+(0 - 18)x20	OETLZW13	1SCA022078R0460	1	4.0
Mechanical interlock mechanism						
Prevents one switch from closing to ON -position, if the other is not in OFF - position.						
OS Mini	Two 3-pole switches needed		OWM6DS1	1SCA105253R1001	1	0.30
OS Mini	Two 4-pole switches needed		OWM6DS2	1SCA105254R1001		0.30
OS315-800	Two 3- or 4-pole switches needed	250	OETLZW14	1SCA022077R3410	1	0.70
OS315-800	Two 3- or 4-pole switches needed	300	OETLZW3	1SCA022049R0380	1	0.80
OS315-1250	Two 3- or 4-pole switches needed	500	OETLZW15	1SCA022081R9340	1	1.24

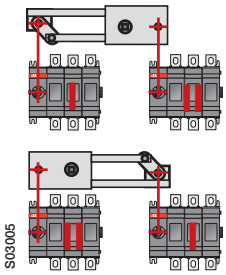

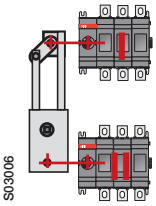

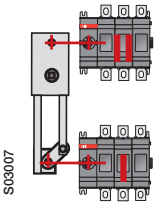

Change-over switches

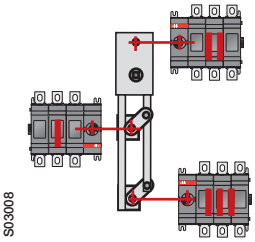

By-pass switches

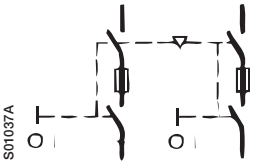

Mechanical interlock

The shafts and handles for conversion kits

Conversion kit type	To be ordered separately		Included in the conversion kit delivery		The standard handle or shaft of one of the combined switches can be used	
	Shaft	Handle	Shaft	Handle	Shaft	Handle
6 and 8-pole switches						
OWP6DS1	x	-	-	-	-	x
OWP6DS2	x	-	-	-	-	x
OESAZW2	-	-	x (2 pcs)	OHB145J12	-	-
OETLZW9	-	-	-	-	x	x
Change-over switches						
OWC6DSH1	x (length min. 170mm)	-	-	OHB65J6E011	-	-
OWC6DSH2	x (length min. 170mm)	-	-	OHB65J6E011	-	-
OESAZW1	-	-	x (2 pcs)	OHB80J6E011	-	-
OTZW25	-	-	x (2 pcs)	OHB95J12E011	-	-
OETLZW11	-	-	x (2 pcs)	OHB145J12E011	-	-
OETLZW12	-	-	x (2 pcs)	YASDA21	-	-
By-pass switches						
OTZW26	-	-	x (3 pcs)	OHB95J12E011	-	-
OETLZW13	-	-	x (3 pcs)	YASDA 6	-	-
Mechanical interlock						
OWM6DS1	x (2 pcs, length min. 170mm)	x (2 pcs)	-	-	-	-
OWM6DS2	x (2 pcs, length min. 170mm)	x (2 pcs)	-	-	-	-
OETLZW14	-	-	-	-	x	x
OETLZW3	-	-	-	-	x	x
OETLZW15	-	-	-	-	x	x

The functional diagram

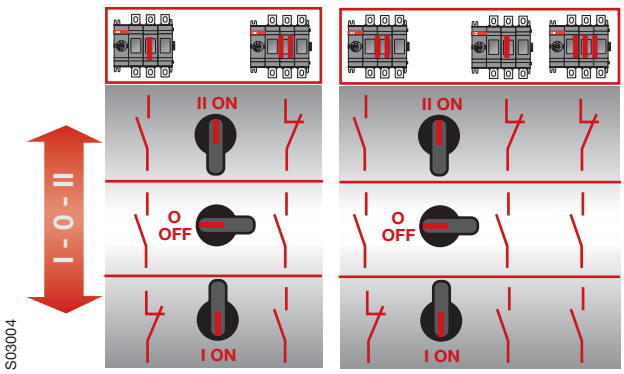

Change-over switch By-pass switch

Blown fuse indicators
Ordering information

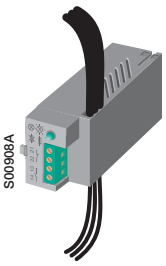

OFM_



OFS_



OFMZX2

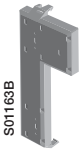

OSZ4

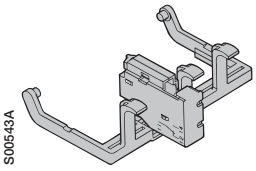

OSD25

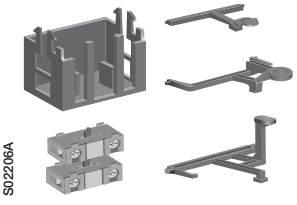

OSZX_

Fuse monitor

- includes the auxiliary contacts 1NO + 1NC. Snap-on fitting onto the switch fuse. See brochure OFM20GB.
Mounting onto the right side of OS30...160 switch or on mounting plate.

Note: For OS Mini the frame for fuse monitor and auxiliary contacts type OSZ4 has to be ordered separately.

Rated voltage [Vac]	Type	Order Number	Units/ type [pcs]	Weight [kg]
100...260	OFM260	1SCA022459R8560	1	0.14
380...690	OFM690	1SCA022459R8480	1	0.14
Electronic fuse monitor, including 1NO + 1NC auxiliary contacts. Mounting onto the left side of OS200-1250 switch fuse or on DIN-rail.				
100…260	OFS260	1SCA022716R0180	1	0.16
380…690	OFS690	1SCA022715R9920	1	0.16

Mounting accessories for fuse monitor.

Suitable for switches	Flat terminal size [mm]	Type	Order Number	Units/ type [pcs]	Weight [kg]
Crimp terminals					
OS_	2.8 - 0.8	OFMZX2	1SCA022475R9910	6	0.01
Mounting frame - Mounting on the left side of the switch					
OS Mini		OSZ4	1SCA022530R0200	1	0.6

Blown fuse indicators (DPMM)

Striker type fuse is needed.

Suitable for switches	Type	Order Number	Units/ type [pcs]	Weight [kg]
OS Mini				
for 3-pole switches	OSD25P3	1SCA022192R9060	1	0.1
for 4-pole switches, fused neutral	OSD25P4	1SCA022196R9520	1	0.1
OS 50...63F				
for 3-pole switches	OSD63P3	1SCA022502R8590	1	0.1
for 4-pole switches, fused neutral	OSD63P4	1SCA022502R8670	1	0.1
OS 100...125F				
for 1...4-pole switches	OSD160P4	1SCA022502R8410	1	0.1
OS200...1250				
for 3-pole switches	OSZX3	1SCA101224R1001	1	0.15
for 4-pole switches	OSZX4	1SCA101225R1001	1	0.20

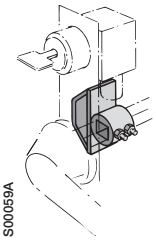

OETLZW5

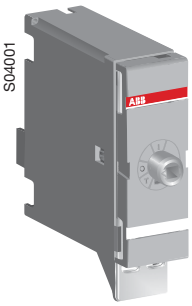

OSZT1_



OSZT3_

Cam attachment

for Castell, Lowe & Fletcher and Ronis interlock
Cam attachment for adopting the switches to the interlock system. The interlock is not included.

Suitable for switches	Type	Order number	Units/ type [pcs]	Weight [kg]
OS200...250	OETLZW16	1SCA022095R2070	1	0.17
OS315...1250	OETLZW5	1SCA022052R3900	1	0.14

Mechanism interlock kits & Electrical interlocks

OS200...1250 switch fuses can be interlocked in the OFF position using padlocks and by using a mechanical interlock kit mounted on the mechanism.
The diameter of the lock bail can be max 8 mm.

Suitable for switches	Type	Order number	Units/ type [pcs]	Weight [kg]
Interlocking in the OFF position				
OS200 ... 250_	OSZT1A	1SCA106532R1001	1	0.32
OS315 ... 400_	OSZT2A	1SCA106534R1001	1	0.75
OS600 ...800_	OSZT3A	1SCA106535R1001	1	1.2
OS1200 ... 1250_	OSZT4A	1SCA106536R1001	1	2.0
Interlocking in the OFF & ON positions				
OS200 ... 250_	OSZT1L	1SCA106538R1001	1	0.32
OS315 ... 400_	OSZT2L	1SCA106539R1001	1	0.75
OS600 ...800_	OSZT3L	1SCA106540R1001	1	1.2
OS1200 ... 1250_	OSZT4L	1SCA106541R1001	1	2.0

Coils

By installing a coil inside the housing of the interlock kit the switch can be interlocked electrically in the OFF position or both in the OFF and ON positions.
The electrical interlock works using the “closed circuit principle”, meaning that when the control voltage is not connected to the coil, the switches provided with A-type interlocks cannot be turned to the ON position and switches with L-type interlocks cannot be turned to the ON or OFF positions.

Suitable for switches	Type	Order number	Units/ type [pcs]	Weight [kg]
AC coils				
24 VAC, 60 Hz	PDAL2/24AC60Hz	1SCA111350R1001	1	0.15
110 VAC, 50Hz	PDAL2/110AC50Hz	1SCA106543R1001	1	0.15
110 VAC, 60Hz	PDAL2/110AC60Hz	1SCA107100R1001	1	0.15
120 VAC, 60 Hz	PDAL2/120AC60Hz	1SCA111353R1001	1	0.15
208 VAC, 60Hz	PDAL2/208AC60Hz	1SCA107101R1001	1	0.15
230 VAC, 50Hz	PDAL2/230AC50Hz	1SCA107102R1001	1	0.15
240 VAC, 60 Hz	PDAL2/240AC60Hz	1SCA111356R1001	1	0.15
DC coils				
24 VDC	PDAL2/24DC	1SCA106542R1001	1	0.15
48 VDC	PDAL2/48DC	1SCA107103R1001	1	0.15
60 VDC	PDAL2/60DC	1SCA107104R1001	1	0.15
110 VDC	PDAL2/110DC	1SCA107105R1001	1	0.15
125 VDC	PDAL2/125DC	1SCA111338R1001	1	0.15

OS Mini

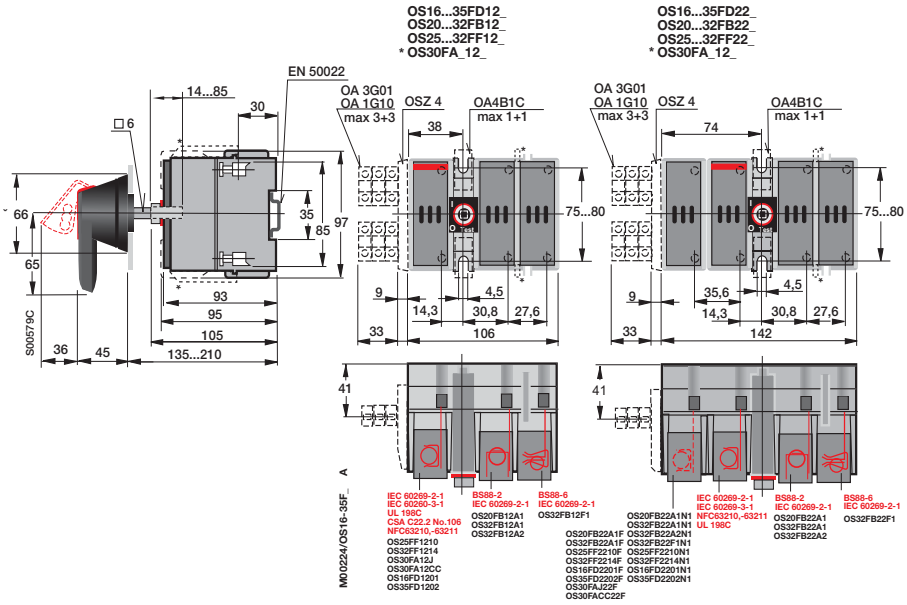

OS 40 Mini

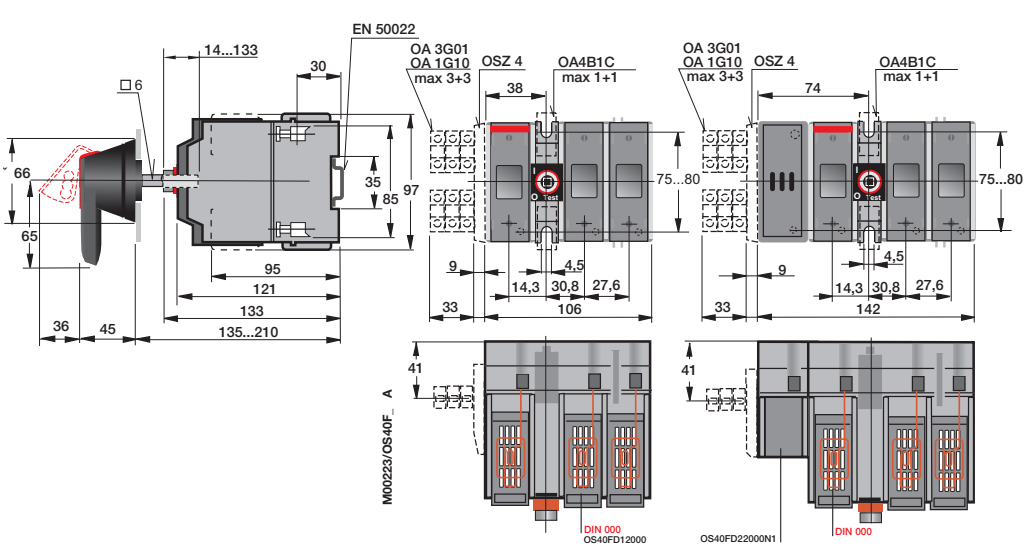

OS 30...63

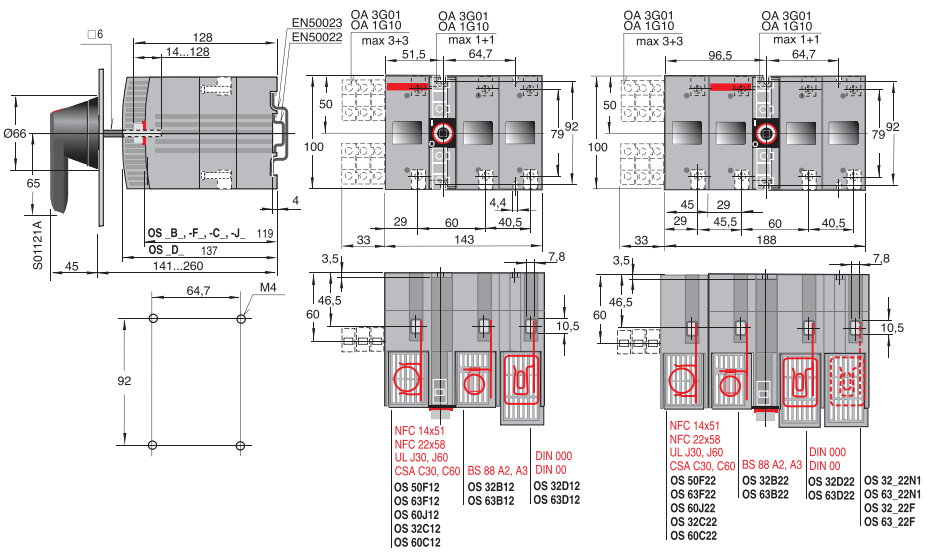

OS 100...160 DIN- and NFC-types, OS 100 BS-types

Mechanism at the end of the switch fuse

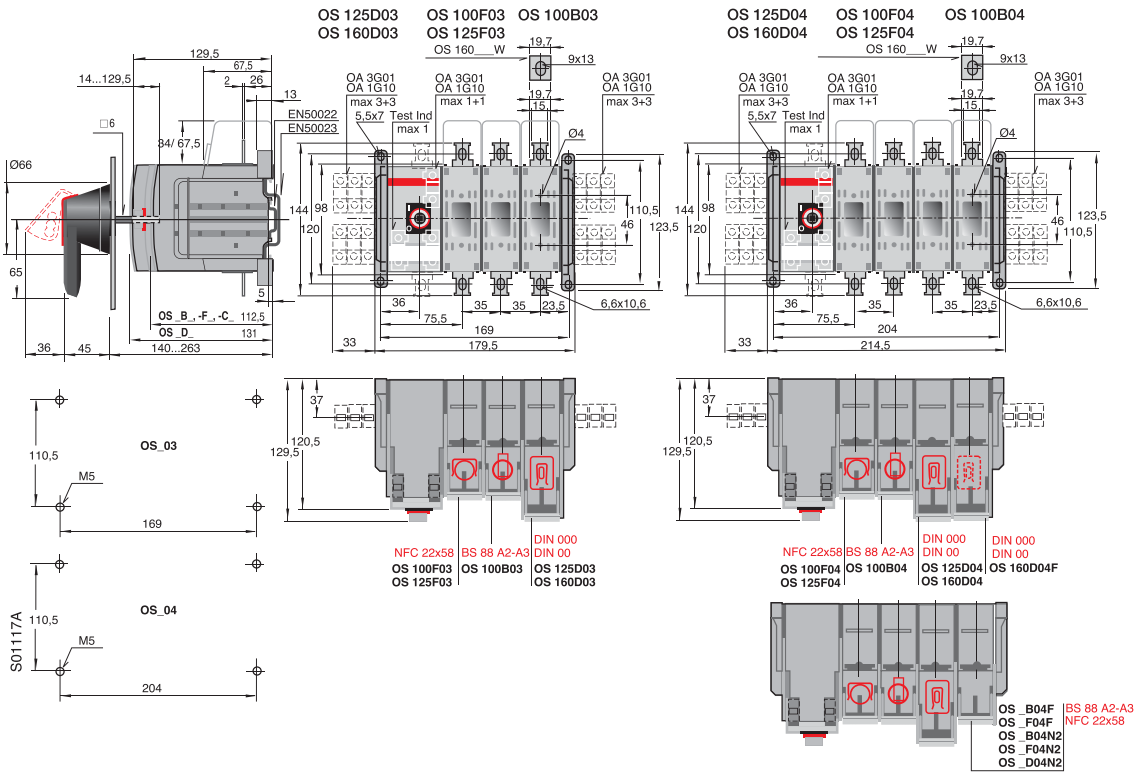

Mechanism between the poles

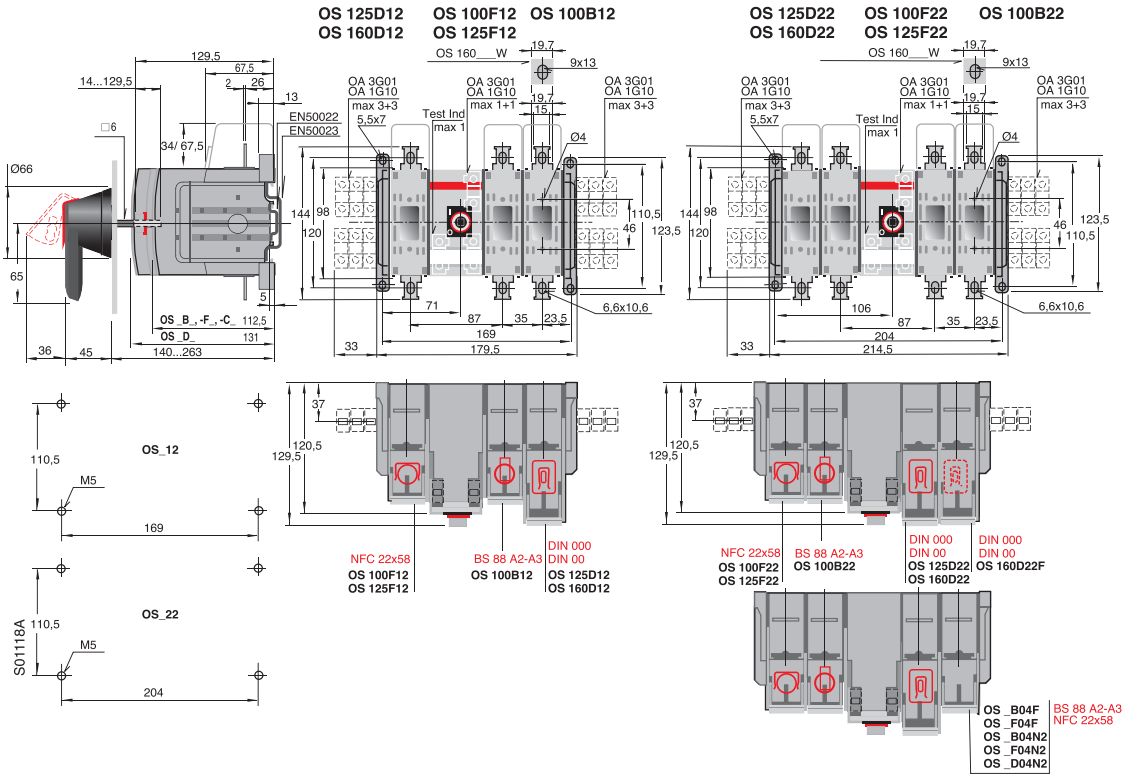

OS 125...160 BS- and OS 100 CSA-types

Mechanism at the end of the switch fuse

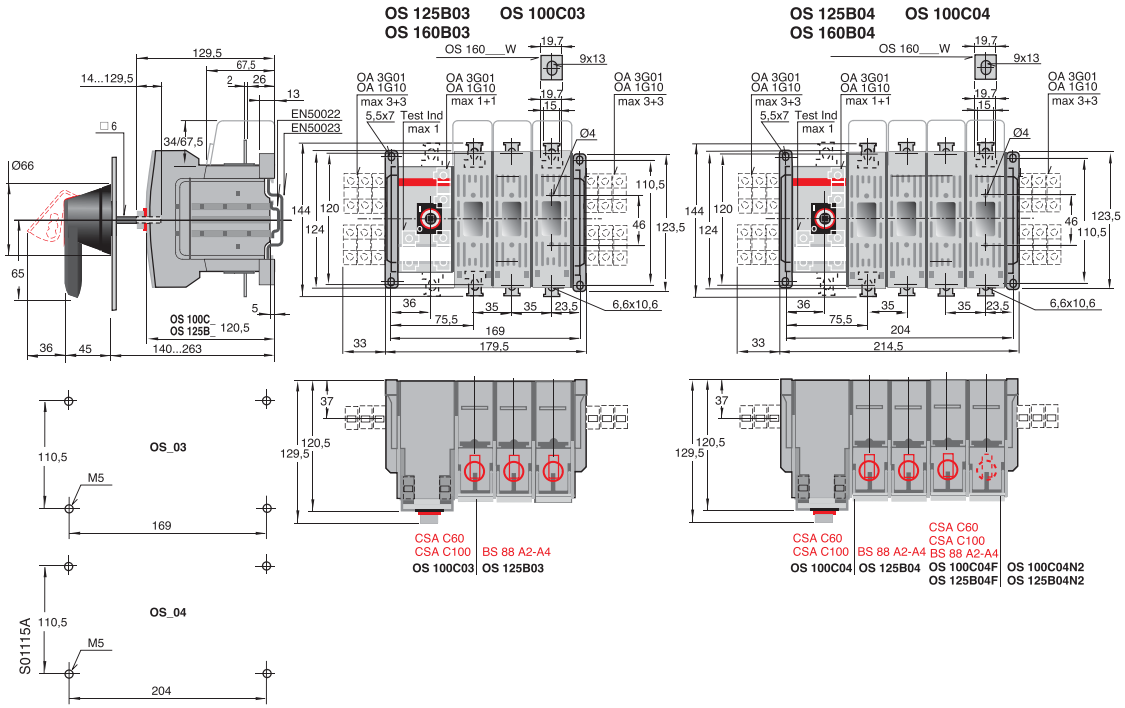

Mechanism between the poles

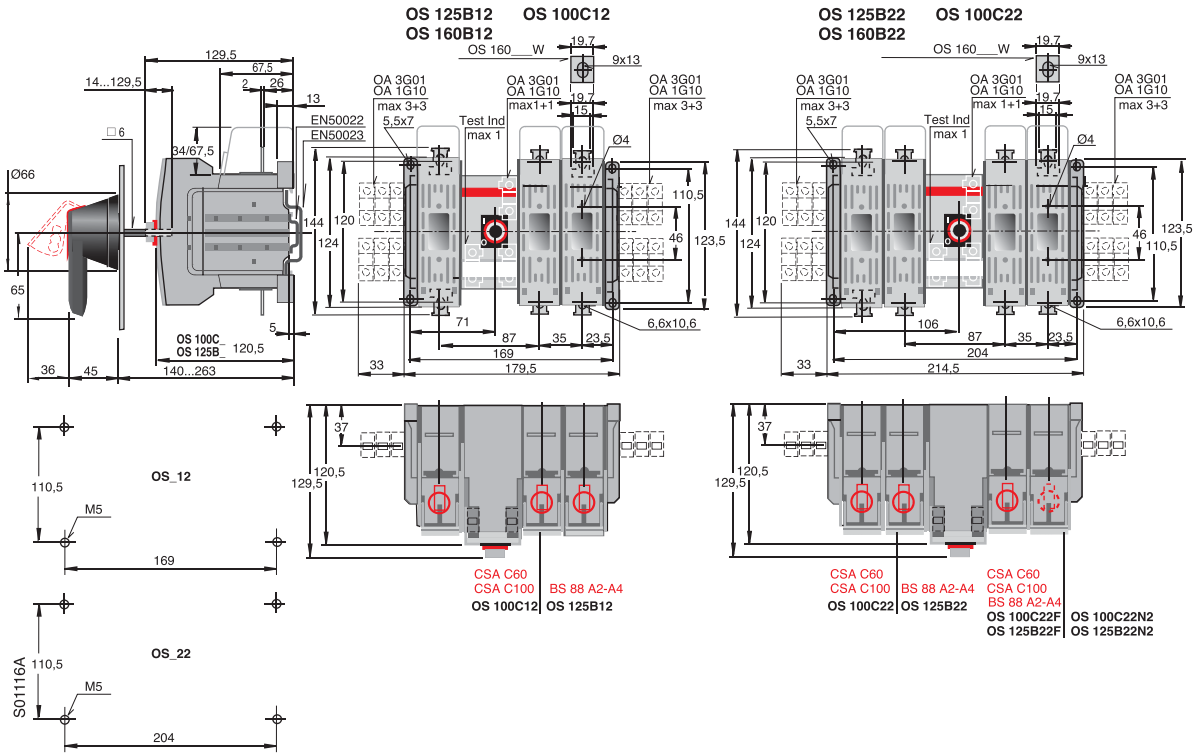

OS 200_P and OS 250_P

Mechanism at the end of the switch fuse

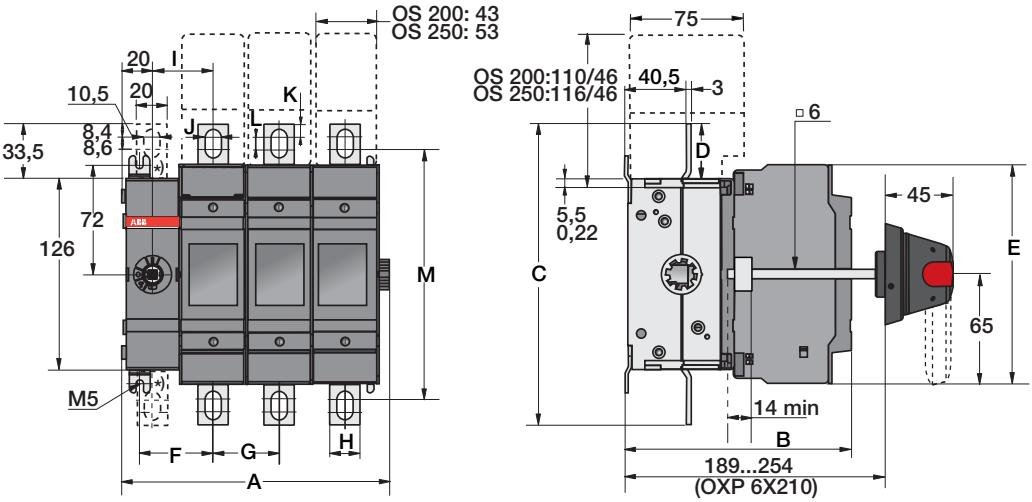

*) OS_N3

M00008/OS200_250_01_04 H

	OS200								OS250			
	D01	B01	D02	B02	D03	B03	D04	B04	D01/B01	D02/B02	D03/B03	D04/B04
A	89,5	89,5	133	133	176,5	176,5	220	220	99,5	153,5	207,5	261,5
B	149	130	149	130	149	130	149	149	154	154	154	154
C	198,5	198,5	198,5	198,5	198,5	198,5	198,5	198,5	193	193	193	193
D	36,5	36,5	36,5	36,5	36,5	36,5	36,5	36,5	33,5	33,5	33,5	33,5
E	144,5	144,5	144,5	144,5	144,5	144,5	144,5	144,5	148,5	148,5	148,5	148,5
F	48,5	48,5	48,5	48,5	48,5	48,5	48,5	48,5	53,5	53,5	53,5	53,5
G	-	-	43,5	43,5	43,5	43,5	43,5	43,5	-	54	54	54
H	20	20	20	20	20	20	20	20	25	25	25	25
I	40	40	40	40	40	40	40	40	45	45	45	45
J	10	10	10	10	10	10	10	10	11	11	11	11
K	8,4	8,4	8,4	8,4	8,4	8,4	8,4	8,4	11,5	11,5	11,5	11,5
L	8,6	8,6	8,6	8,6	8,6	8,6	8,6	8,6	4	4	4	4
M	164,5	164,5	164,5	164,5	164,5	164,5	164,5	164,5	162	162	162	162
A1	60,5	60,5	104	104	147,5	147,5	191	191	70,5	124,5	178,5	232,5
B1	79,5	79,5	123	123	166,5	166,5	210	210	89,5	143,5	197,5	251,5
C1	96,5	96,5	140	140	183,5	183,5	227	227	106,5	160,5	214,5	268,5

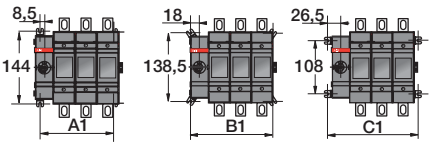

Mechanism between the poles

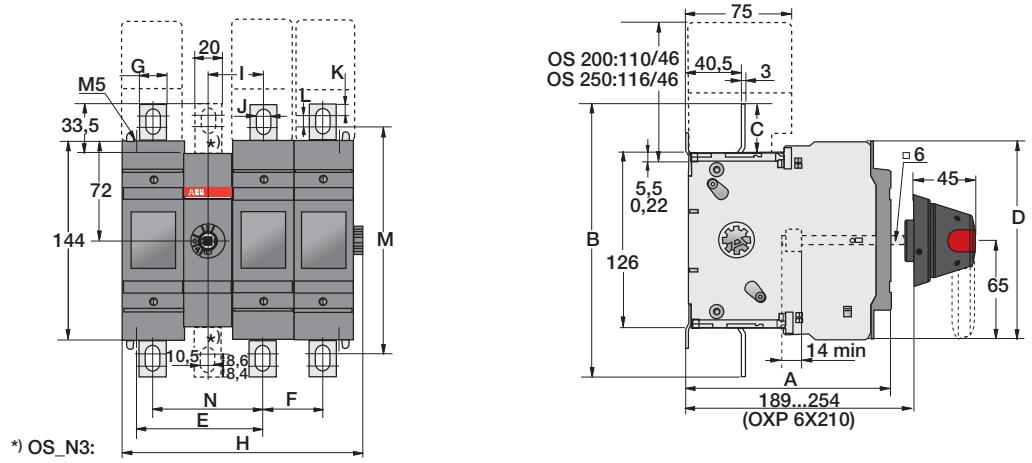

M00014/OS200_250_11_22 H

	OS200							OS250			
	D11	B11	D12	B12	D13	B13	D22	B22	D11	D12	D13	D22
A	149	130	149	130	141	130	149	130	154	154	154	154
B	199	199	199	199	199	199	199	199	193	193	193	193
C	36,5	36,5	36,3	36,5	36,5	36,5	36,5	36,5	33,5	33,5	33,5	33,5
D	144,5	144,5	144,5	144,5	144,5	144,5	144,5	144,5	148,5	148,5	148,5	148,5
E	92	92	92	92	92	92	135,5	135,5	112,5	112,5	112,5	161
F	43,5	43,5	43,5	43,5	43,5	43,5	43,5	43,5	54	54	54	54
G	20	20	20	20	20	20	20	20	25	25	25	25
H	132	132	175,5	175,5	219	219	219	219	152	206	260	260
I	40	40	40	40	40	40	40	40	45	45	45	45
J	10	10	10	10	10	10	10	10	11	11	11	11
K	8,4	8,4	8,4	8,4	8,4	8,4	8,4	8,4	11,5	11,5	11,5	11,5
L	8,6	8,6	8,6	8,6	8,6	8,6	8,6	8,6	4	4	4	4
M	165	165	165	165	165	165	165	165	162	162	162	162
N	80	80	80	80	80	80	80	80	90	90	90	90
A1	104	104	147,5	147,5	191	191	191	191	124	178	232	232
A2	52	52	52	52	52	52	95,5	95,5	62	62	62	116
B1	123	123	166,5	166,5	210	210	210	210	143	197	251	251
B2	61,5	61,5	61,5	61,5	61,5	61,5	105	105	71,5	71,5	71,5	125,5
C1	140	140	183,5	183,5	227	227	227	227	160	214	268	268
C2	70	70	70	70	70	70	113,5	113,5	80	80	80	134

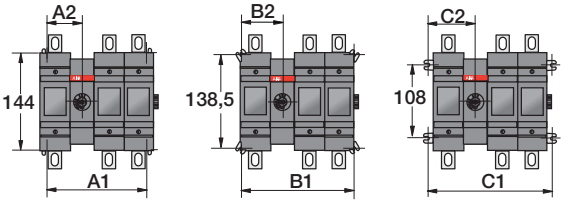

OS 315_P and OS 400_P

Mechanism at the end of the switch fuse

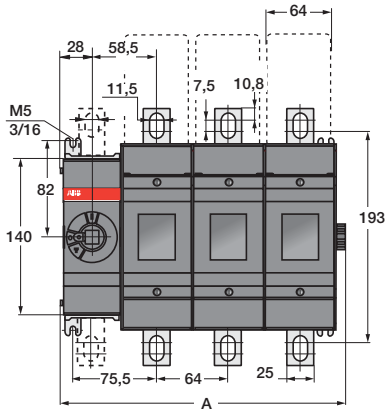

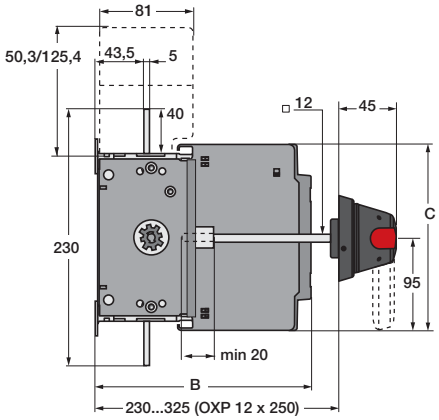

C000014 /OS315_400_001_04 A

	OS315				OS400							
	B01	B02	B03	B04	B01	B02	B03	B04	D01	D02	D03	D04
	mm	mm	mm	mm	mm	mm	mm	mm	mm	mm	mm	mm
A	127	191	255	319	127	191	255	319	127	191	255	319
B	176	176	176	176	176	176	176	176	193	193	193	193
C	194	194	194	194	194	194	194	194	166	166	166	166

	OS315				OS400			
	B01	B02	B03	B04	B01/D01	B02/D02	B03/D03	B04/D04
	mm	mm	mm	mm	mm	mm	mm	mm
A1	98.5	162.5	226.5	290.5	98.5	162.5	226.5	290.5
B1	116.5	180.5	244.5	308.5	116.5	180.5	244.5	308.5
C1	134.5	198.5	262.5	326.5	134.5	198.5	262.5	326.5

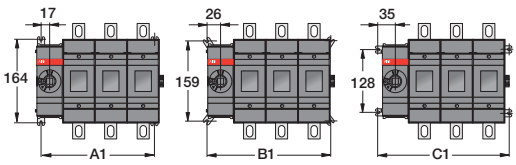

Mechanism between the poles

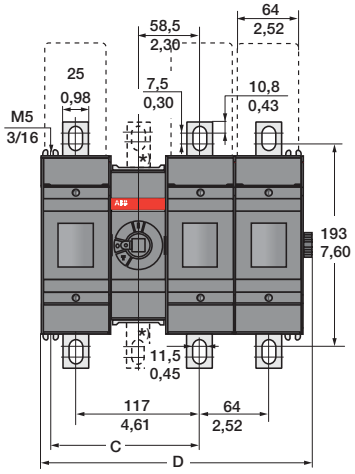

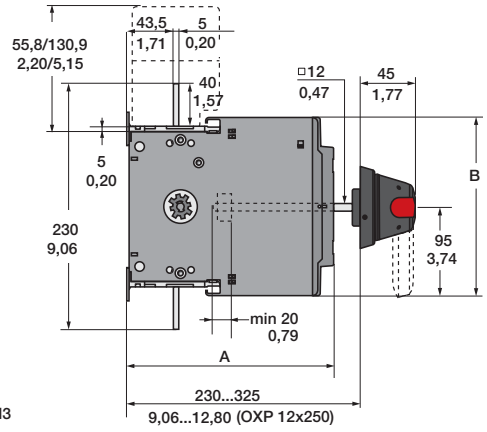

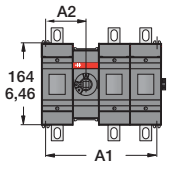

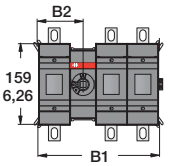

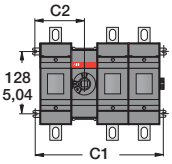

C000011/OS315-400_11_22 B

	OS315-400					OS400									
	B11	B12	B13	B21	B22	D11	D12	D13	D21	D22	J11	J12	J13	J21	J22
	mm	mm	mm	mm	mm	mm	mm	mm	mm	mm	mm/in	mm/in	mm/in	mm/in	mm/in
A	176	176	176	176	176	193	193	193	193	193	176 / 6,93	176 / 6,93	176 / 6,93	176 / 6,93	176 / 6,93
B	194	194	194	194	194	166	166	166	166	166	194 / 7,64	194 / 7,64	194 / 7,64	194 / 7,64	194 / 7,64
C	140	140	140	204	204	140	140	140	204	204	140 / 5,51	140 / 5,51	140 / 5,51	204 / 8,03	204 / 8,03
D	190	254	318	254	318	190	254	318	254	318	190 / 7,48	254 / 10,00	318 / 12,52	254 / 10,00	318 / 12,52

	OS315					OS400				
	B11	B12	B21	B22	B13	B11/D11/J11	B12/D12/J12	B21/D21/J21	B22/D22/J22	B13/D13/J13
	mm	mm	mm	mm	mm	mm/in	mm/in	mm/in	mm/in	mm/in
A1	163	227	227	291	291	163/6,42	227/8,94	227/8,94	291/11,46	291/11,46
A2	81.5	81.5	145.5	145.5	81.5	81,5/3.21	81,5/3.21	145,5/5,73	145,5/5,73	81,5/3.21
B1	181	245	245	309	309	181/7,13	245/9,65	245/9,65	309/12,17	309/12,17
B2	90.5	90.5	154.5	154.5	90.5	90,5/3,56	90,5/3,56	154,5/6,08	154,5/6,08	90,5/3,56
C1	199	263	263	327	327	199/7,83	263/10,35	263/10,35	327/12,87	327/12,87
C2	99.5	99.5	163.5	163.5	99.5	99,5/3,92	99,5/3,92	163,5/6,44	163,5/6,44	99,5/3,92

OS 630_P and OS 800_P

Mechanism at the end of the switch fuse

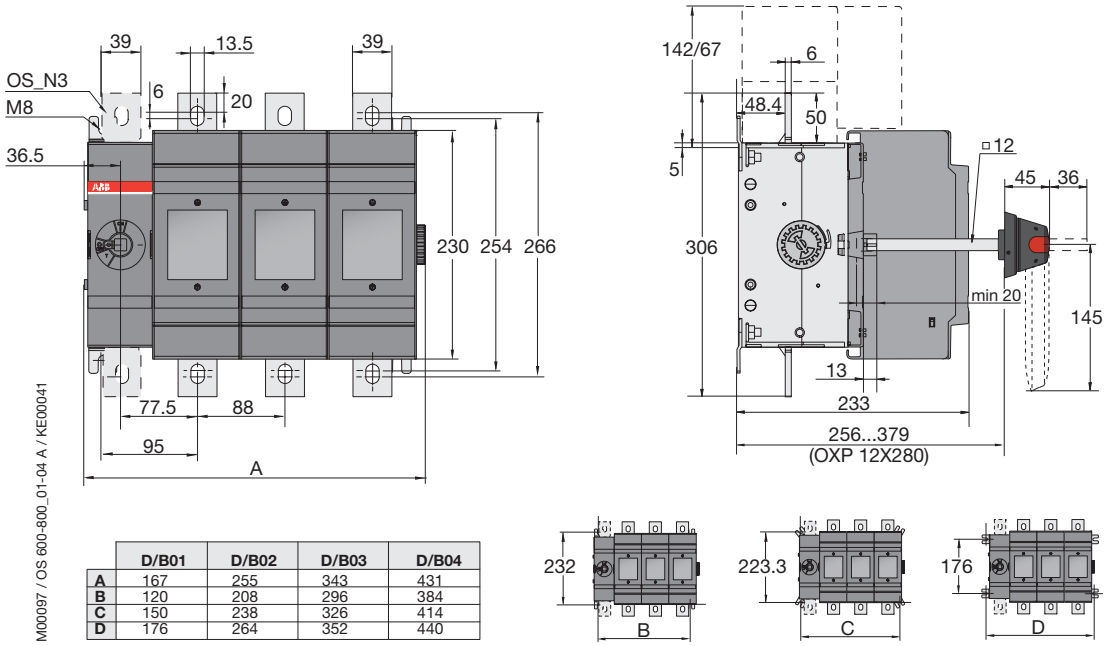

	D/B01	D/B02	D/B03	D/B04
A	167	255	343	431
B	120	208	296	384
C	150	238	326	414
D	176	264	352	440

Mechanism between the poles

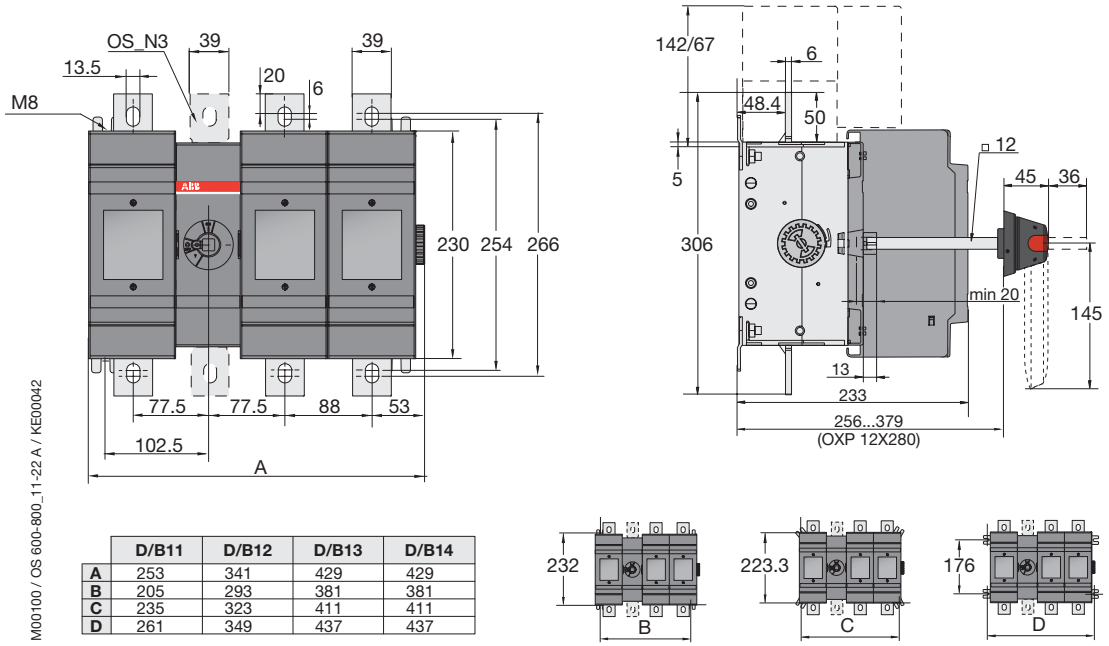

	D/B11	D/B12	D/B13	D/B14
A	253	341	429	429
B	205	293	381	381
C	235	323	411	411
D	261	349	437	437

OS 1250_P

Mechanism at the end of the switch fuse

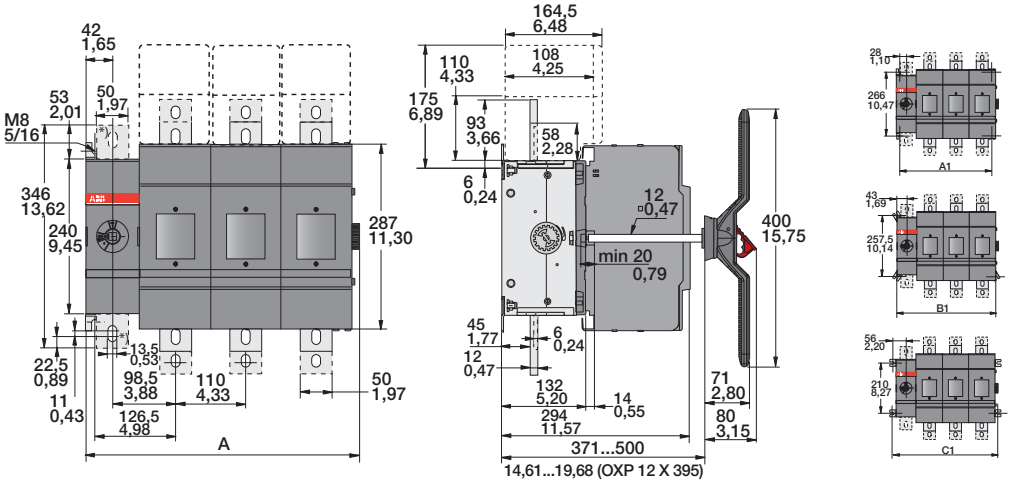

*) N3- types

M00207/OS1200-1250_01-04 A

	OS1200/1250			
	D/L /B01	D/L /B02	D/L /B03	D/L /B04
	mm / in	mm / in	mm / in	mm / in
A	209 / 8,23	319 / 12,56	429 / 16,89	539 / 21,22
A1	166 / 6,54	276 / 10,87	386 / 15,20	496 / 19,53
B1	196 / 7,72	306 / 12,05	416 / 16,38	526 / 20,71
C1	222 / 8,74	332 / 13,07	442 / 17,40	552 / 21,73

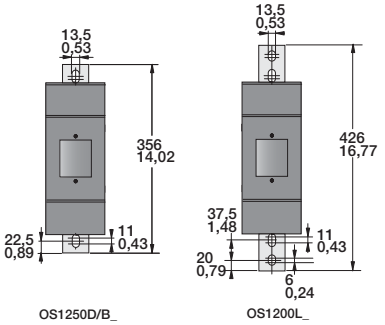

Mechanism between the poles

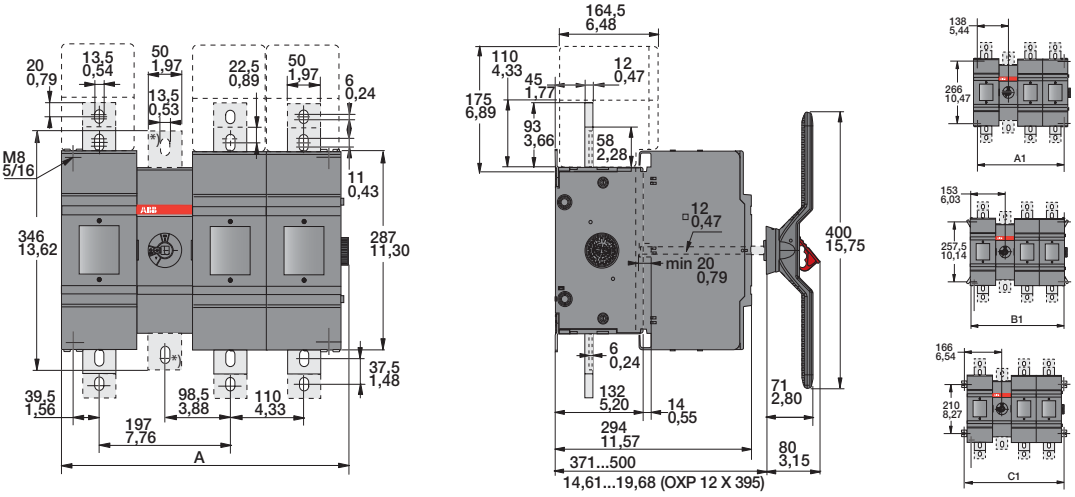

*) N3- types

M00208/OS1200-1250_11-22 A

	OS1200/1250			
	D/L /B11	D/L /B12	D/L /B13	D/L /B22
	mm / in	mm / in	mm / in	mm / in
A	322 / 12,68	432 / 17,01	542 / 21,34	542 / 21,34
A1	276 / 10,87	386 / 15,20	496 / 19,53	496 / 19,53
B1	306 / 12,05	416 / 16,38	526 / 20,71	526 / 20,71
C1	322 / 13,07	442 / 17,40	552 / 21,73	552 / 21,73

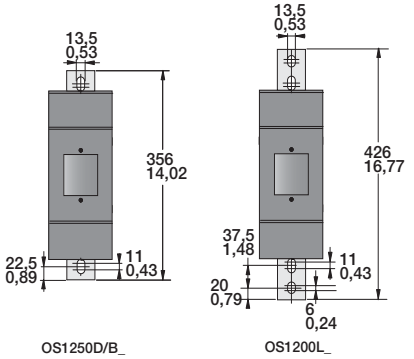

OS 100 J

Mechanism at the end of the switch fuse

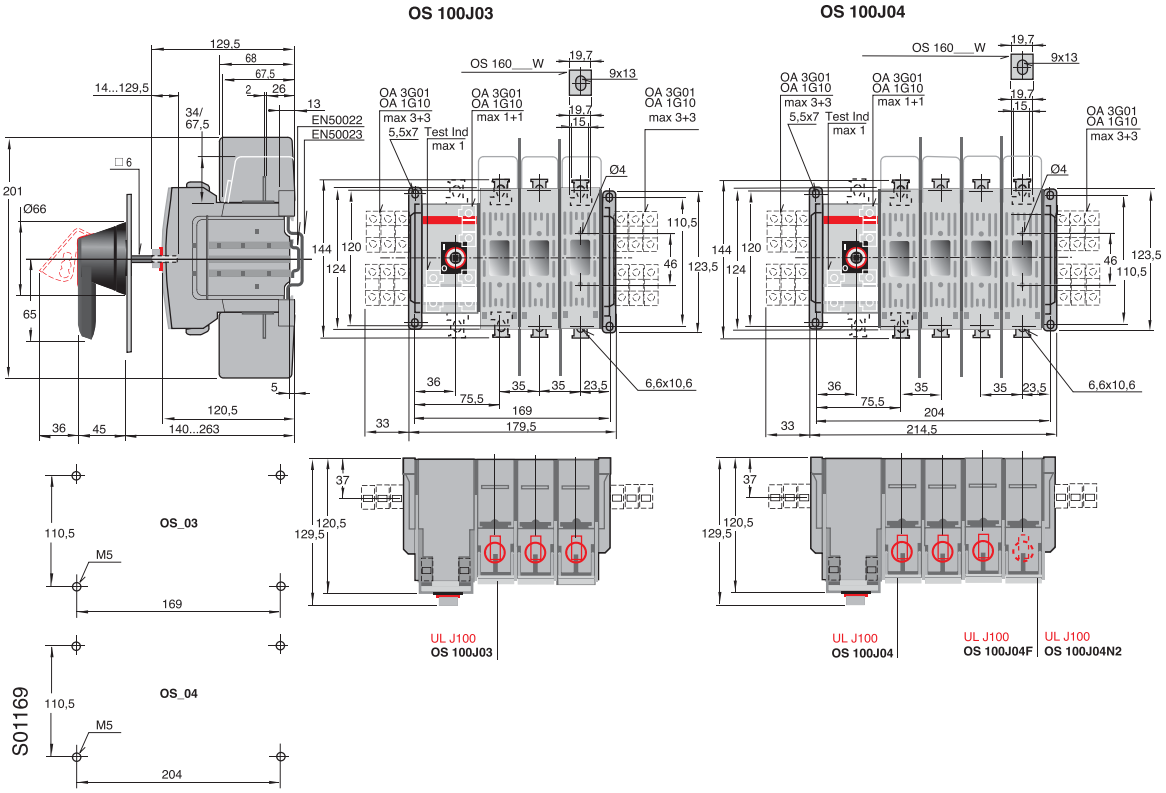

Mechanism between the poles

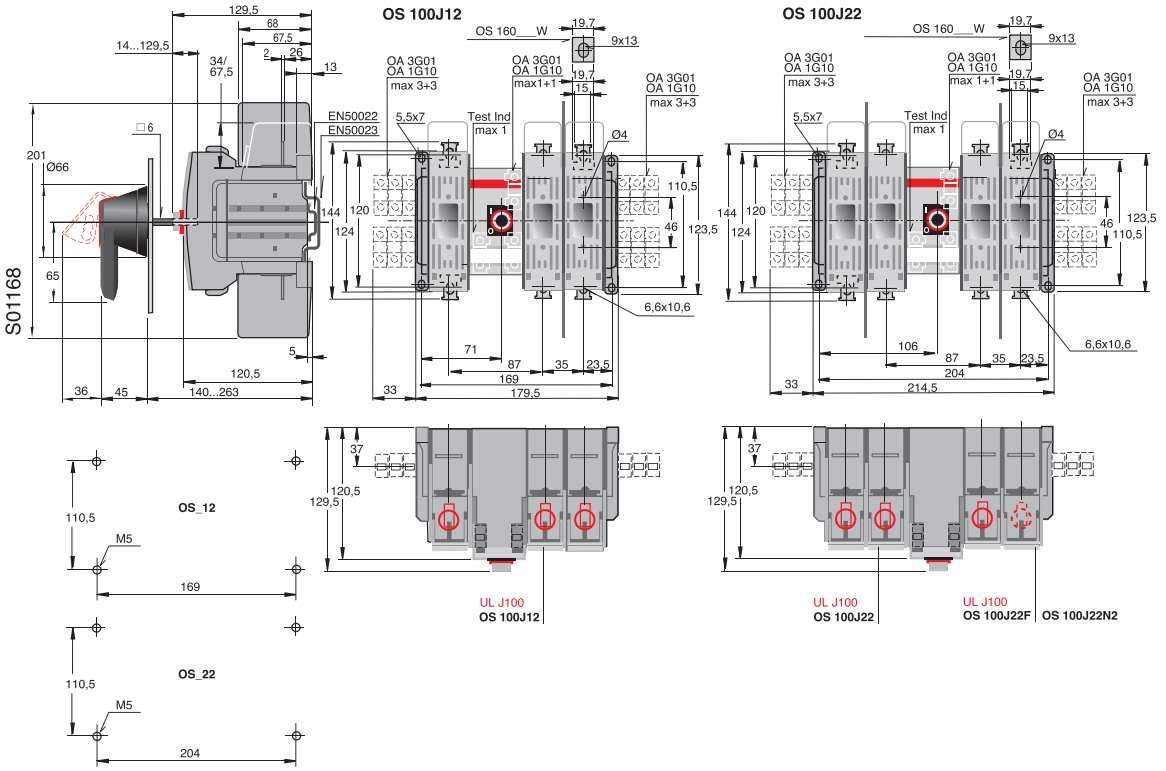

OS 200J

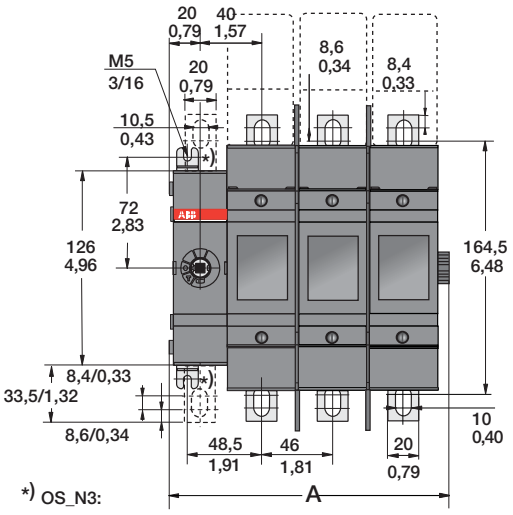

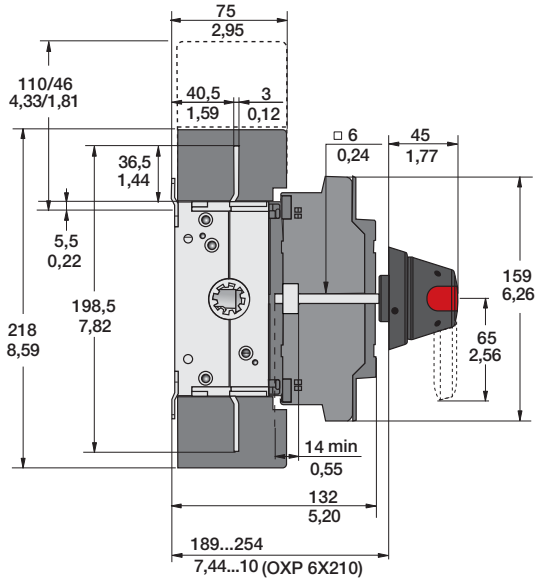

M00001/OS200J01_04 H

	OS200J01	OS200J02	OS200J03	OS200J04
	mm/ in	mm/ in	mm/ in	mm/ in
A	89,5 / 3,52	135,5 / 5,34	181,5 / 7,15	227,5 / 8,96
A1	60,5 / 2,38	106,5 / 4,19	152,5 / 6,00	198,5 / 7,82
B1	79,5 / 3,13	125,5 / 4,94	171,5 / 6,75	217,5 / 8,56
C1	96,5 / 3,80	142,5 / 5,61	188,5 / 7,42	234,5 / 9,23

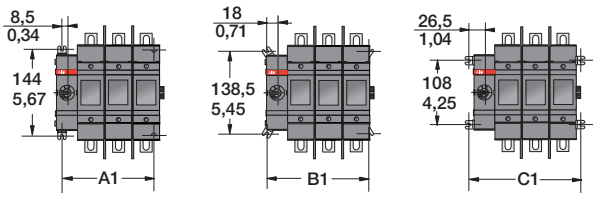

OS 400J

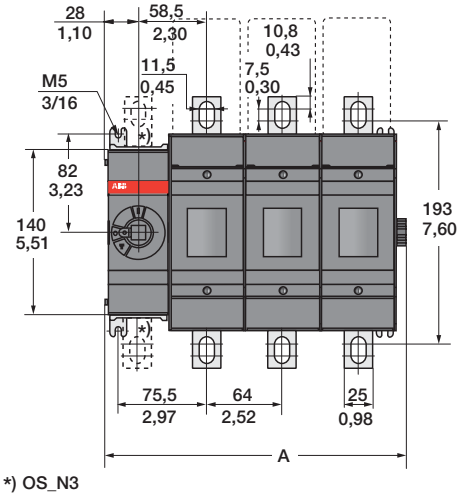

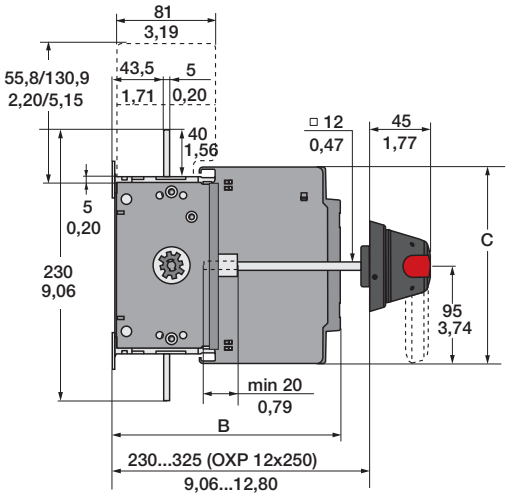

C000012 /OS315_400_01_04 B

	OS315 - 400				OS400							
	B01	B02	B03	B04	D01	D02	D03	D04	J01	J02	J03	J04
	mm	mm	mm	mm	mm	mm	mm	mm	mm/in	mm/in	mm/in	mm/in
A	127	191	255	319	127	191	255	319	127/5,00	191/7,52	255/10,04	319/12,56
B	176	176	176	176	193	193	193	193	176/6,93	176/6,93	176/6,93	176/6,93
C	194	194	194	194	166	166	166	166	194/7,64	194/7,64	194/7,64	194/7,64

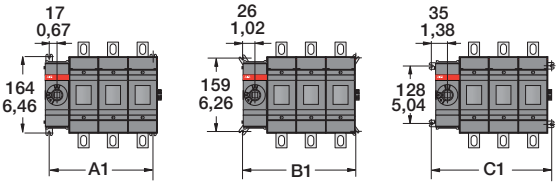

	OS315				OS400			
	B01	B02	B03	B04	B01/D01/J01	B02/D02/J02	B03/D03/J03	B04/D04/J04
	mm	mm	mm	mm	mm/in	mm/in	mm/in	mm/in
A1	98.5	162.5	226.5	290.5	98.5/3,88	162.5/6,40	226.5/8,92	290.5/11,44
B1	116.5	180.5	244.5	308.5	116.5/4,59	180.5/7,11	244.5/9,63	308.5/12,15
C1	134.5	198.5	262.5	326.5	134.5/5,30	198.5/7,81	262.5/10,33	326.5/12,85

OS 600J and 800L

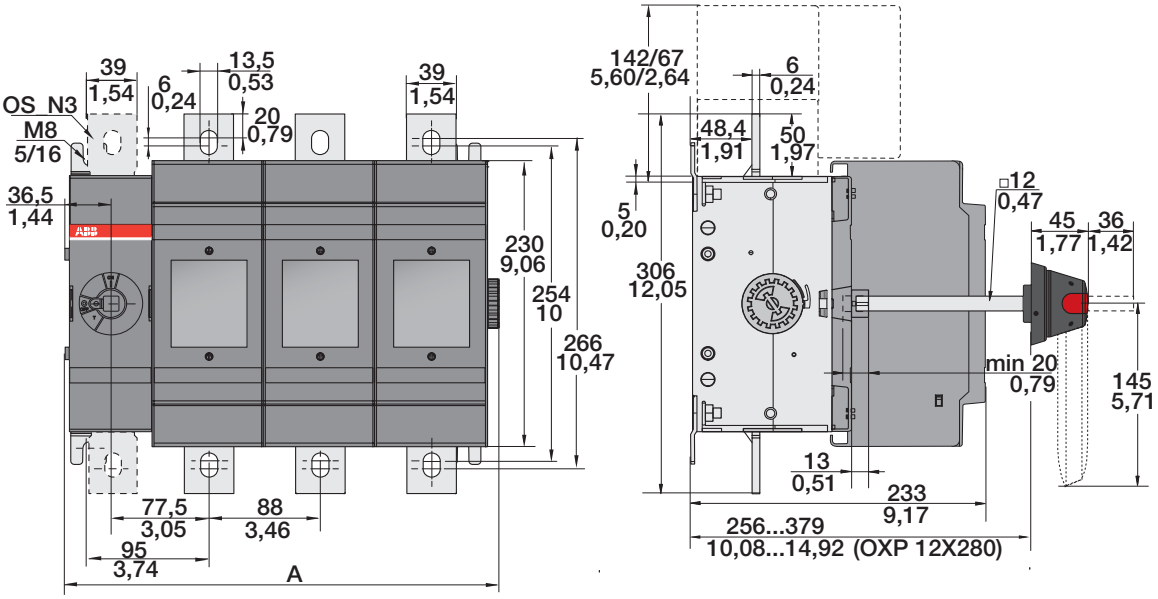

M00097 / OS 600-800_01-04 B

	D/B/J/L01	D/B/J/L02	D/B/J/L03	D/B/J/L04
A	167/6,57	255/10,04	343/13,50	431/16,97
B	120/4,72	208/8,19	296/11,65	384/15,12
C	150/5,91	238/9,37	326/12,83	414/16,30
D	176/6,93	264/10,39	352/13,86	440/17,32

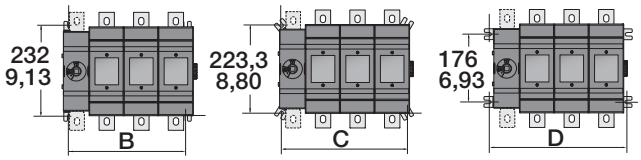

OS 1200L

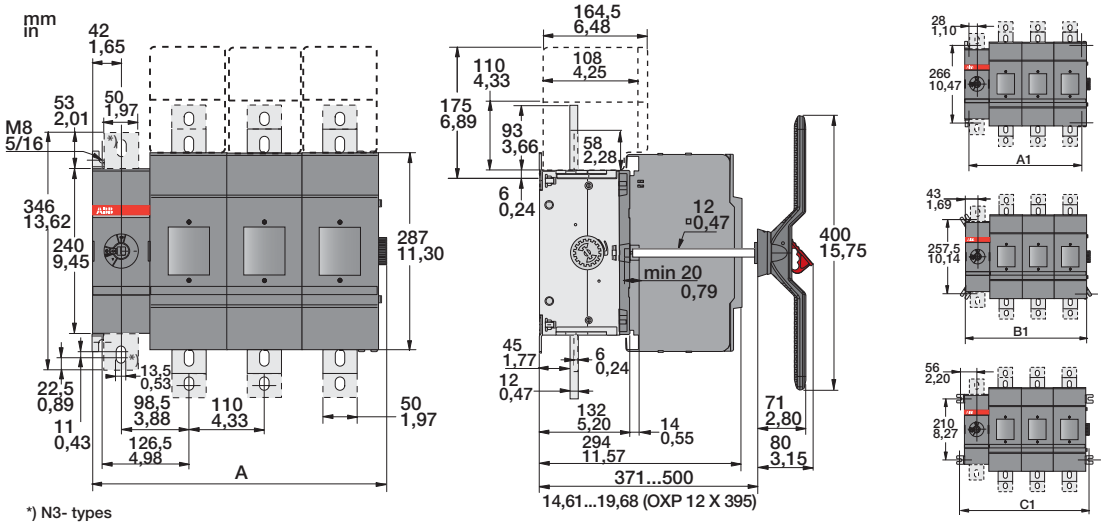

M00207/OS1200-1250_01-04 A

	OS1200			
	D/L /B01	D/L /B02	D/L /B03	D/L /B04
	mm / in	mm / in	mm / in	mm / in
A	209 / 8,23	319 / 12,56	429 / 16,89	539 / 21,22
A1	166 / 6,54	276 / 10,87	386 / 15,20	496 / 19,53
B1	196 / 7,72	306 / 12,05	416 / 16,38	526 / 20,71
C1	222 / 8,74	332 / 13,07	442 / 17,40	552 / 21,73

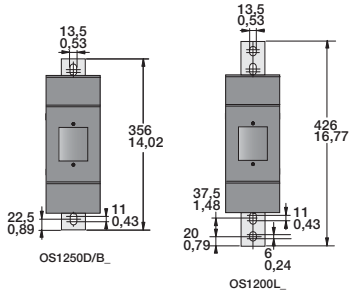

OS 200_K and OS 250_K

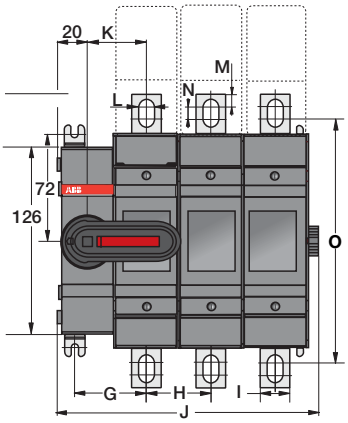

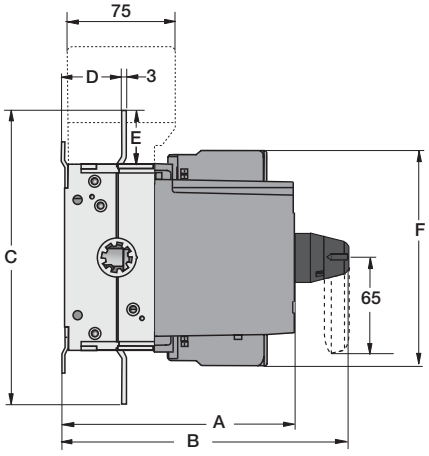

	OS200 K								OS250 K			
	D01	B01	D02	B02	D03	B03	D04	B04	D01/B01	D02/B02	D03/B03	D04/B04
A	154	130	154	130	154	130	154	130	154	154	154	154
B	191	167	191	167	191	167	191	167	191	191	191	191
C	198,5	198,5	198,5	198,5	198,5	198,5	198,5	198,5	193	193	193	193
D	40,5	40,5	40,5	40,5	40,5	40,5	40,5	40,5	40,5	40,5	40,5	40,5
E	36,5	36,5	36,5	36,5	36,5	36,5	36,5	36,5	33,5	33,5	33,5	33,5
F	144,5	144,5	144,5	144,5	144,5	144,5	144,5	144,5	148,5	148,5	148,5	148,5
G	48,5	48,5	48,5	48,5	48,5	48,5	48,5	48,5	53,5	53,5	53,5	53,5
H	-	-	43,5	43,5	43,5	43,5	43,5	43,5	-	54	54	54
I	20	20	20	20	20	20	20	20	25	25	25	25
J	89,5	89,5	133	133	176,5	176,5	220	220	99,5	153,5	207,5	261,5
K	40	40	40	40	40	40	40	40	45	45	45	45
L	10	10	10	10	10	10	10	10	11	11	11	11
M	8,5	8,5	8,5	8,5	8,5	8,5	8,5	8,5	11,5	11,5	11,5	11,5
N	8,5	8,5	8,5	8,5	8,5	8,5	8,5	8,5	4	4	4	4
O	164,5	164,5	164,5	164,5	164,5	164,5	164,5	164,5	162	162	162	162

M00080/OS 200_250_01_04K C

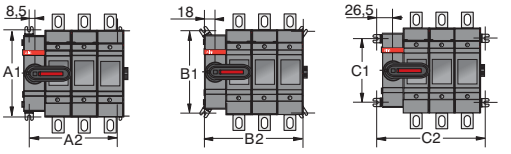

	OS200K				OS250K			
	D01/B01	D02/B02	D03/B03	D04/B04	D01	D02	D03	D04
A1	144	144	144	144	144	144	144	144
A2	60,5	104	147,5	191	70,5	124,5	178,5	232,5
B1	138,5	138,5	138,5	138,5	138,5	138,5	138,5	138,5
B2	79,5	123	166,5	210	89,5	143,5	197,5	251,5
C1	108	108	108	108	108	108	108	108
C2	96,5	140	183,5	227	106,5	160,5	214,5	268,5

OS 315_K and OS 400_K

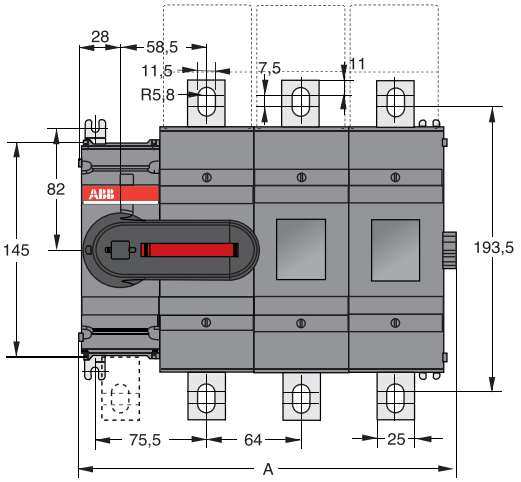

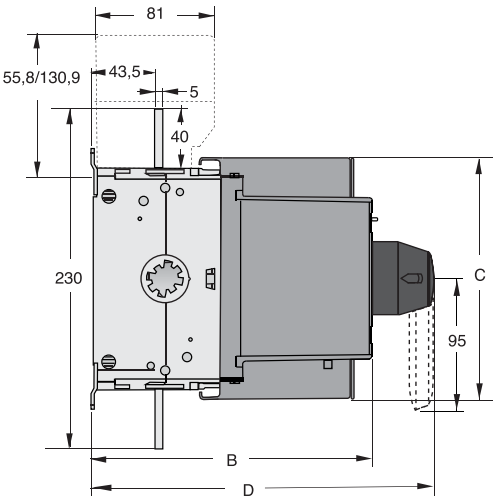

	OS315, OS400				OS400			
	B01K	B02K	B03K	B04K	D01K	D02K	D03K	D04K
A	127	191	255	319	127	191	255	319
B	176	176	176	176	193	193	193	193
C	194	194	194	194	166	166	166	166
D	219	219	219	219	236	236	236	236

	OS315, OS400				OS400			
	B01K	B02K	B03K	B04K	D01K	D02K	D03K	D04K
A1	98,5	162,5	226,5	290,5	98,5	162,5	226,5	290,5
B1	116,5	180,5	244,5	308,5	116,5	180,5	244,5	308,5
C1	134,5	198,5	262,5	326,5	134,5	198,5	262,5	326,5

M00081/OS315-400_01_04K B

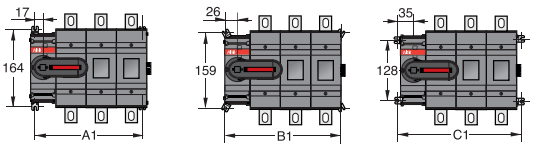

OS 600_K and OS 800_K

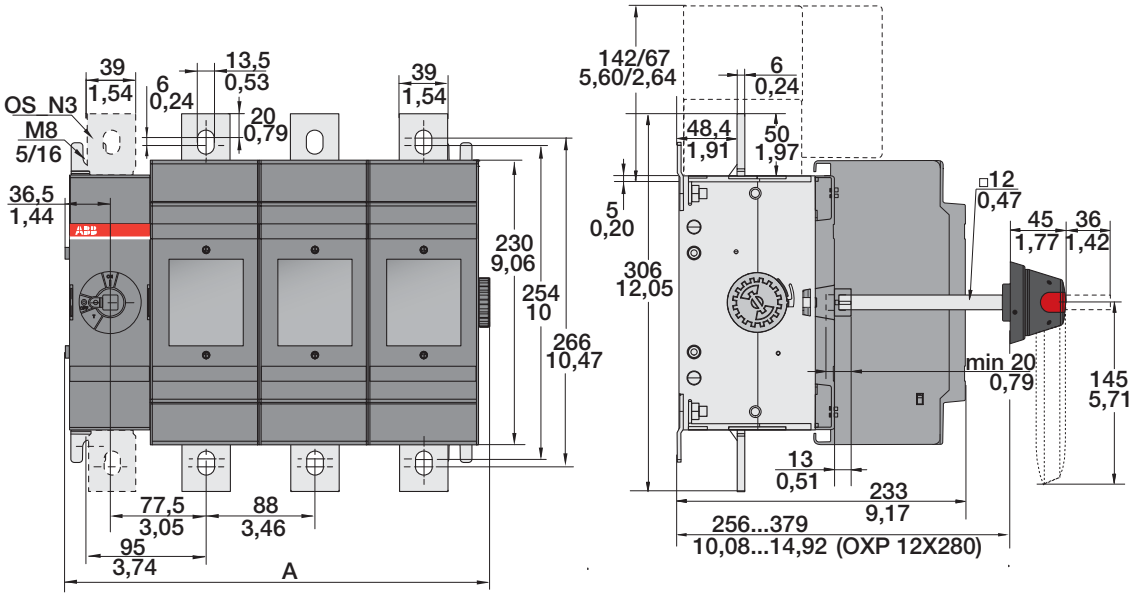

M00097 / OS 600-800_01-04 B

	D/B/J/L01	D/B/J/L02	D/B/J/L03	D/B/J/L04
A	167/6,57	255/10,04	343/13,50	431/16,97
B	120/4,72	208/8,19	296/11,65	384/15,12
C	150/5,91	238/9,37	326/12,83	414/16,30
D	176/6,93	264/10,39	352/13,86	440/17,32

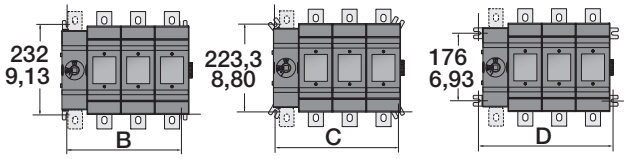

OS 1250_K

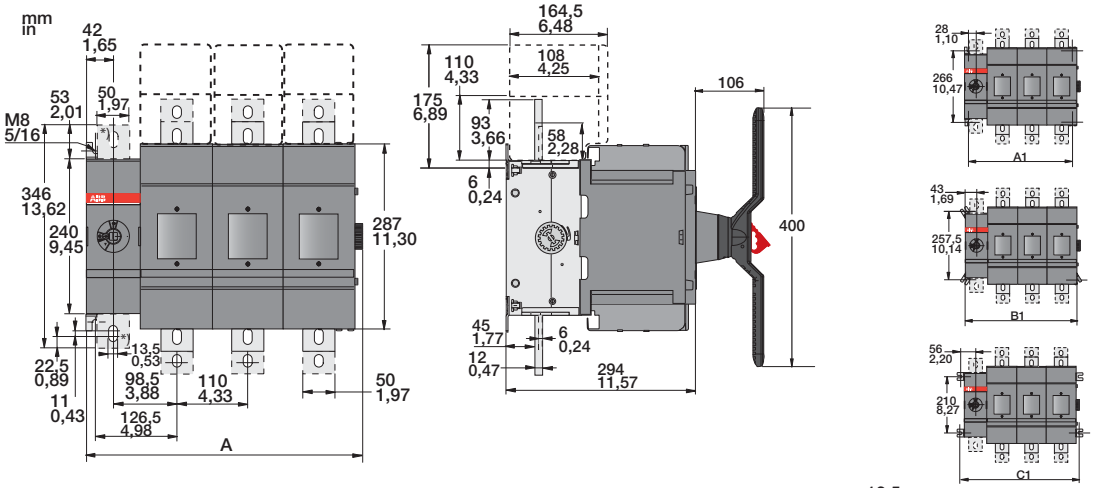

*) N3- types

M00231 / OS1200-1250_01-04K A

	OS1200/1250			
	D/L /B01	D/L /B02	D/L /B03	D/L /B04
	mm / in	mm / in	mm / in	mm / in
A	209 / 8,23	319 / 12,56	429 / 16,89	539 / 21,22
A1	166 / 6,54	276 / 10,87	386 / 15,20	496 / 19,53
B1	196 / 7,72	306 / 12,05	416 / 16,38	526 / 20,71
C1	222 / 8,74	332 / 13,07	442 / 17,40	552 / 21,73

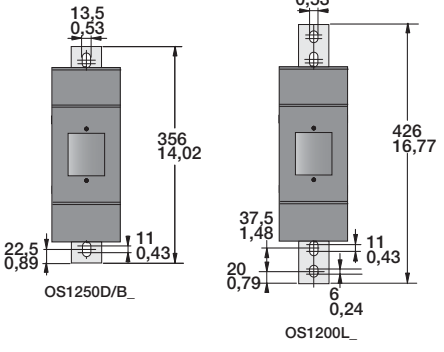

Side operated switch fuses
Dimension drawings

OS Mini

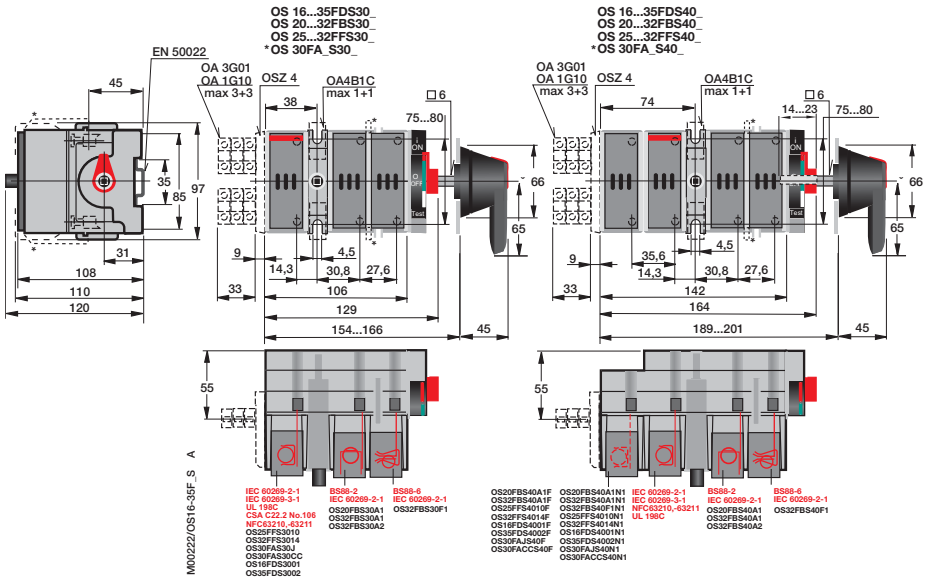

OS 40 Mini

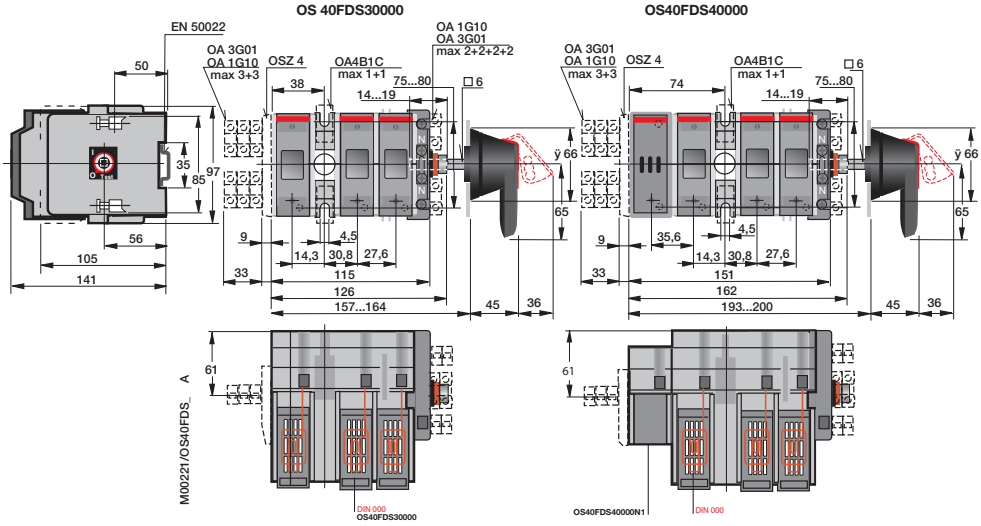

OS 30...63

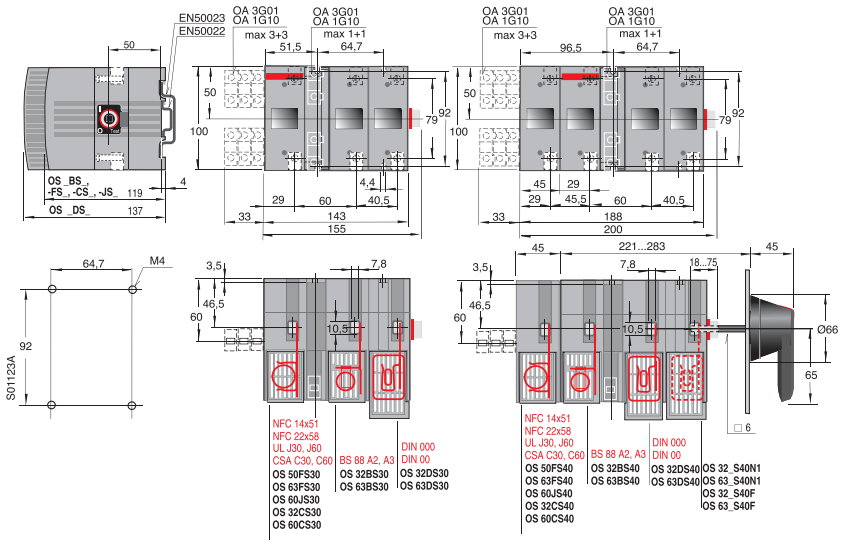

OS 100...160 DIN- and NFC-types, OS 100 BS-types

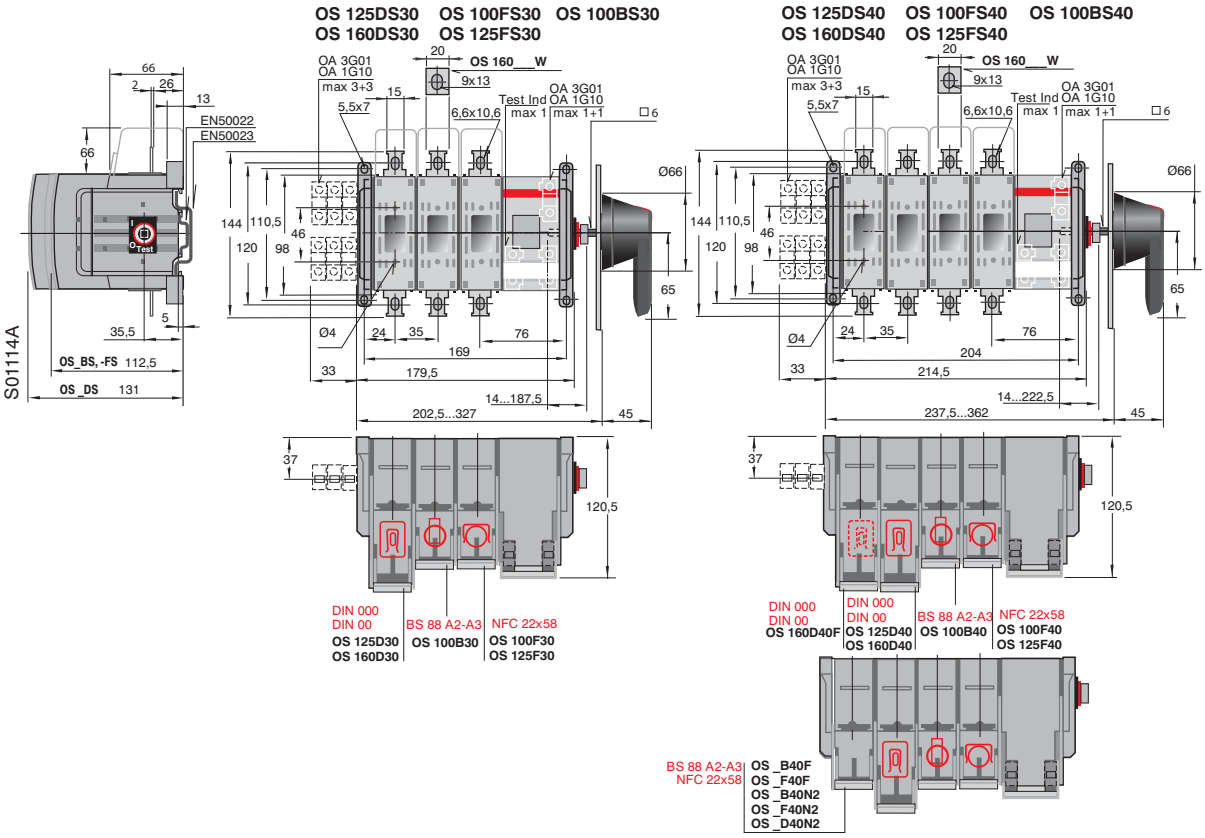

OS 125...160 BS-types, OS 100 CSA-types

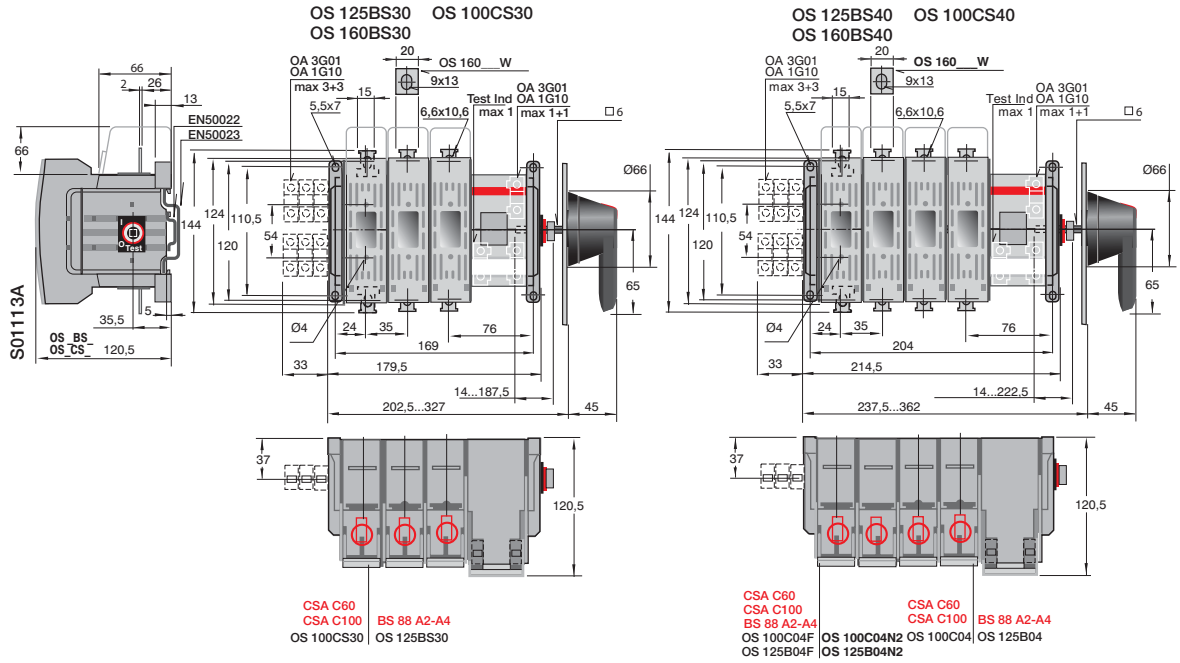

Side operated switch fuses with direct mounted handles
Dimension drawings

OS 200...400 _K

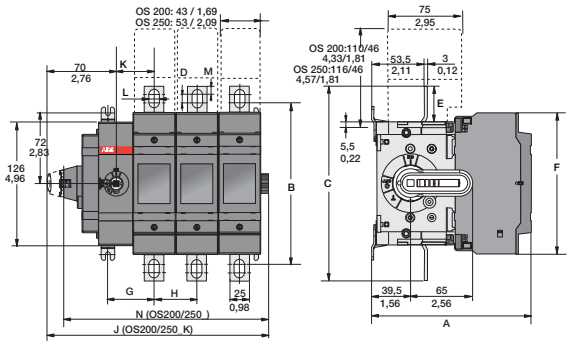

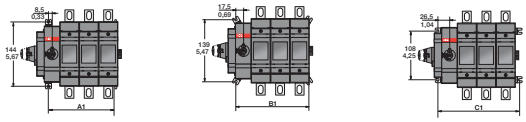

M00153/OS200-250_S01-04_ A

	OS200 _, OS200 _K												OS250 _, OS250 _K							
	DS01		BS01		DS02		BS02		DS03		BS03		DS04		BS04		DS01		DS02	
A	149,0	5,87	130,0	5,12	149,0	5,87	130,0	5,12	149,0	5,87	130,0	5,12	149,0	5,87	149,0	5,87	154,0	6,06	154,0	6,06
B	164,5	6,48	164,5	6,48	164,5	6,48	164,5	6,48	164,5	6,48	164,5	6,48	164,5	6,48	164,5	6,48	162,0	6,38	162,0	6,38
C	198,5	7,81	198,5	7,81	198,5	7,81	198,5	7,81	198,5	7,81	198,5	7,81	198,5	7,81	198,5	7,81	193,0	7,60	193,0	7,60
D	8,5	0,33	8,5	0,33	8,5	0,33	8,5	0,33	8,5	0,33	8,5	0,33	8,5	0,33	8,5	0,33	4,0	0,16	4,0	0,16
E	36,5	1,44	36,5	1,44	36,5	1,44	36,5	1,44	36,5	1,44	36,5	1,44	36,5	1,44	36,5	1,44	33,5	1,32	33,5	1,32
F	144,5	5,69	144,5	5,69	144,5	5,69	144,5	5,69	144,5	5,69	144,5	5,69	144,5	5,69	144,5	5,69	148,5	5,85	148,5	5,85
G	48,5	1,91	48,5	1,91	48,5	1,91	48,5	1,91	48,5	1,91	48,5	1,91	48,5	1,91	48,5	1,91	53,5	2,11	53,5	2,11
H	-	-	-	-	43,5	1,71	43,5	1,71	43,5	1,71	43,5	1,71	43,5	1,71	43,5	1,71	-	-	54,0	2,13
I	20,0	0,79	20,0	0,79	20,0	0,79	20,0	0,79	20,0	0,79	20,0	0,79	20,0	0,79	20,0	0,79	25,0	0,98	25,0	0,98
J	138,5	5,45	138,5	5,45	182,0	7,17	182,0	7,17	225,5	8,88	225,5	8,88	269,0	10,59	269,0	10,59	148,5	5,85	202,5	7,97
K	40,0	1,57	40,0	1,57	40,0	1,57	40,0	1,57	40,0	1,57	40,0	1,57	40,0	1,57	40,0	1,57	45,0	1,77	45,0	1,77
L	10,0	0,39	10,0	0,39	10,0	0,39	10,0	0,39	10,0	0,39	10,0	0,39	10,0	0,39	10,0	0,39	11,0	0,43	11,0	0,43
M	8,5	0,33	8,5	0,33	8,5	0,33	8,5	0,33	8,4	0,33	8,5	0,33	8,5	0,33	8,5	0,33	11,5	0,45	11,5	0,45
N	121,5	4,78	121,5	4,78	165,0	6,50	165,0	6,50	208,5	8,21	208,5	8,21	252,0	9,92	252,0	9,92	131,5	5,18	186,0	7,32
A1	60,5	2,38	60,5	2,38	104,0	4,09	104,0	4,09	147,5	5,81	147,5	5,81	191,0	7,52	191,0	7,52	70,5	2,78	124,5	4,90
B1	79,5	3,13	79,5	3,13	123,0	4,84	123,0	4,84	166,5	6,56	166,5	6,56	210,0	8,27	210,0	8,27	89,5	3,52	143,5	5,65
C1	96,5	3,80	96,5	3,80	140,0	5,51	140,0	5,51	183,5	7,22	183,5	7,22	227,0	8,94	227,0	8,94	106,5	4,19	214,5	8,44

	OS250 _, OS250 _K					
	DS03		DS04			
A	154,0	6,06	154,0	6,06	154,0	6,06
B	162,0	6,38	162,0	6,38	162,0	6,38
C	193,0	7,60	193,0	7,60	193,0	7,60
D	4,0	0,16	4,0	0,16	4,0	0,16
E	33,5	1,32	33,5	1,32	33,5	1,32
F	148,5	5,85	148,5	5,85	148,5	5,85
G	53,5	2,11	53,5	2,11	53,5	2,11
H	54,0	2,13	54,0	2,13	54,0	2,13
I	25,0	0,98	25,0	0,98	25,0	0,98
J	202,5	7,97	256,5	10,10	310,5	12,22
K	45,0	1,77	45,0	1,77	45,0	1,77
L	11,0	0,43	11,0	0,43	11,0	0,43
M	11,5	0,45	11,5	0,45	11,5	0,45
N	186,0	7,32	240,0	9,45	294,0	11,57
A1	124,5	4,90	178,5	7,03	232,5	9,15
B1	143,5	5,65	197,5	7,78	251,5	9,90
C1	214,5	8,44	268,5	10,57	322,5	12,70

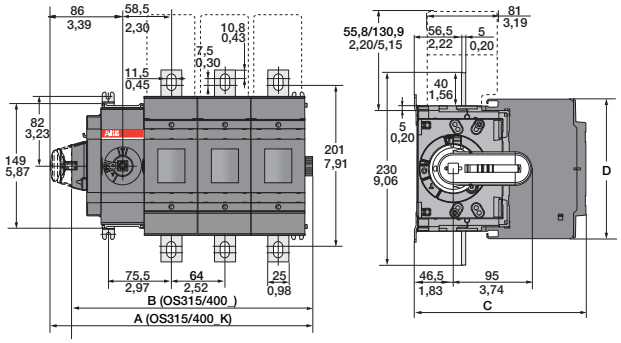

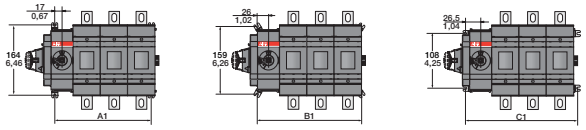

M00154/OS315-400_S01-04_ A

	OS315, OS315 K, OS400, OS400 _K								OS400 _, OS400 _K							
	BS01/JS01		BS02/JS02		BS03/JS03		BS04/JS04		DS01		DS02		DS03		DS04	
	mm	in	mm	in	mm	in	mm	in	mm	in	mm	in	mm	in	mm	in
A	185,0	7,28	249,0	9,80	313,0	12,32	377,0	14,84	185,0	7,28	249,0	9,80	313,0	12,32	377,0	14,84
B	160,0	6,30	224,0	8,82	288,0	11,34	352,0	13,86	160,0	6,30	224,0	8,82	288,0	11,34	352,0	13,86
C	176,0	6,93	176,0	6,93	176,0	6,93	176,0	6,93	193,0	7,60	193,0	7,60	193,0	7,60	193,0	7,60
D	194,0	7,64	194,0	7,64	194,0	7,64	194,0	7,64	166,0	6,54	166,0	6,54	166,0	6,54	166,0	6,54
A1	98,5	3,88	162,5	6,40	226,5	8,92	290,5	11,44	98,5	3,88	162,5	6,40	226,5	8,92	290,5	11,44
B1	116,5	4,59	180,5	7,11	244,5	9,63	308,5	12,15	116,5	4,59	180,5	7,11	244,5	9,63	308,5	12,15
C1	134,5	5,30	198,5	7,81	262,5	10,33	326,5	12,85	134,5	5,30	198,5	7,81	262,5	10,33	326,5	12,85

OS 630_K and OS 800_K

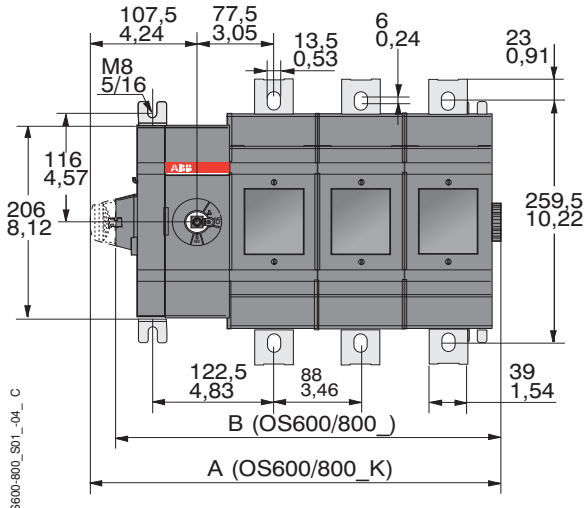

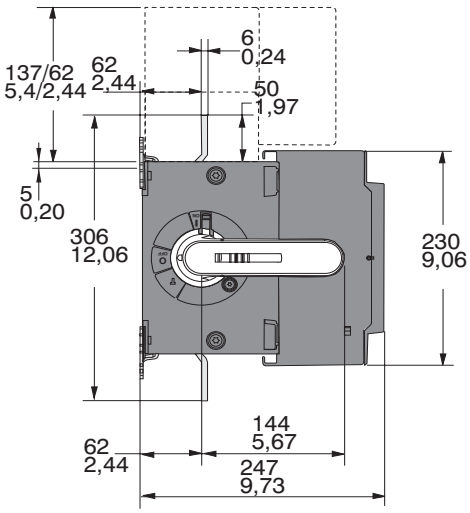

M00146/OS600-800_S01_-04_ C

	OS600/630/800_ , OS600/630/800_K			
	DS/BS/JS/LS01	DS/BS/JS/LS02	DS/BS/JS/LS03	DS/BS/JS/LS04
	mm / in	mm / in	mm / in	mm / in
A	238/9,38	326/12,84	414/16,31	502/19,78
B	213/8,39	301/11,86	389/15,32	477/18,79
A1	147,5/5,81	235,5/9,28	323,5/12,75	411,5/16,21
B1	177,5/6,99	265,5/10,46	353,5/13,93	441,5/17,39
C1	203,5/8,02	291,5/11,48	379,5/14,95	467,5/18,42

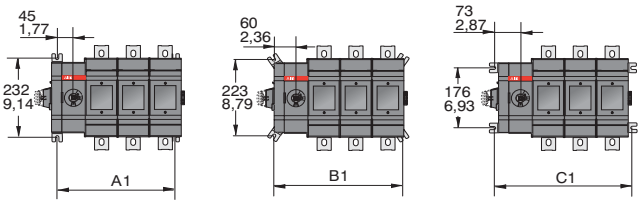

OS 100 J

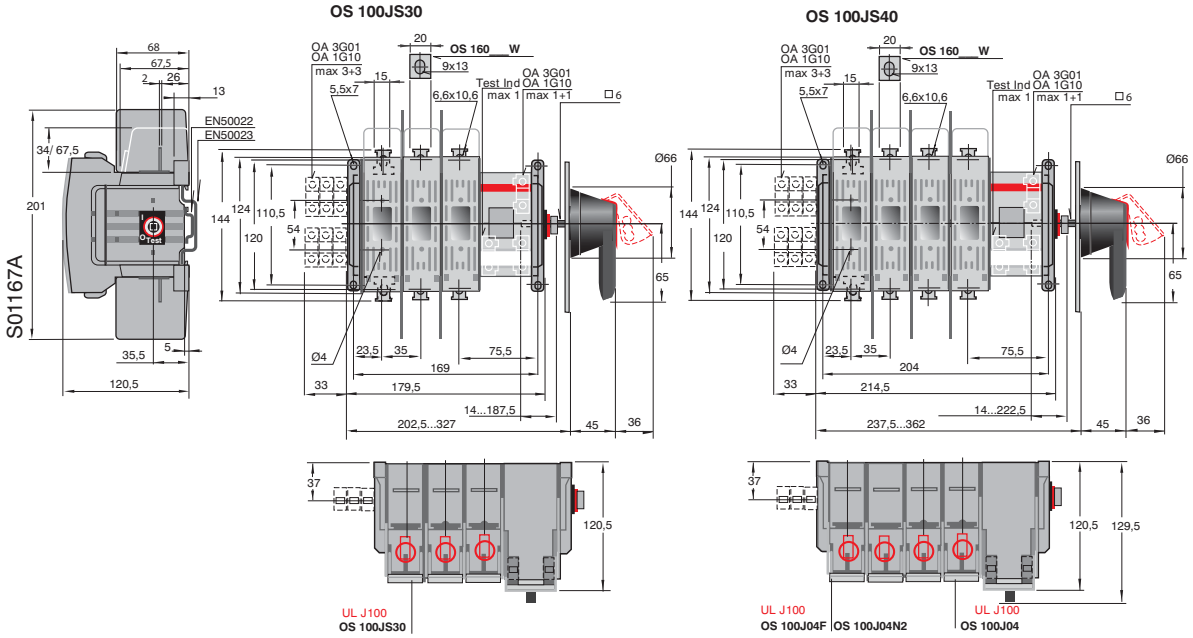
OS 100JS30
OS 100JS40
S01167A
OA 3G01
OA 1G10
max 3+3
OS 160___W
9x13
5,5x7
6,6x10,6
Test Ind
max 1
OA 3G01
OA 1G10
max 1+1
□6
EN50022
EN50023
Ø66
65
Ø4
23,5
35
75,5
169
179,5
33
14...187,5
202,5...327
45
36
204
214,5
14...222,5
237,5...362
37
120,5
129,5
UL J100
OS 100JS30
OS 100J04F
OS 100J04N2
OS 100J04

Plastic handles

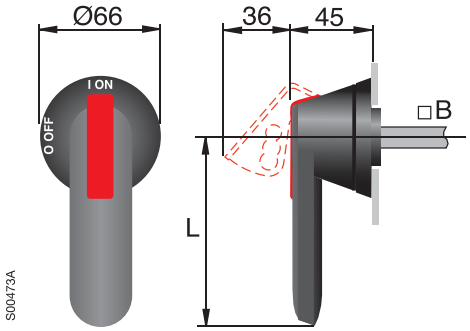

Type	L handle length	B shaft diameter
OH_65J6	65	6
OH_95J12	95	12
OH_125J12	125	12
OH_145J12	145	12
OH_175J12	175	12
OH_275J12	275	12

Door drilling for OH_ handles:

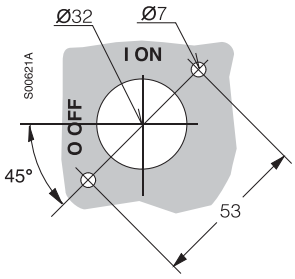

Handle type	L
OHB150J12P	300
OHB200J12P	400

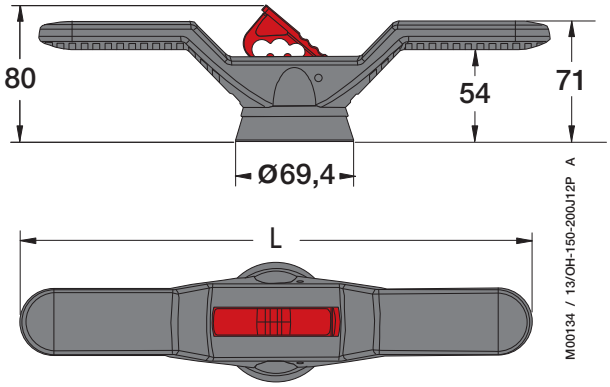

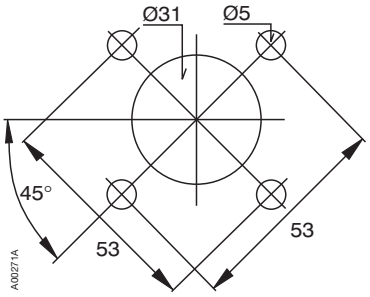

Metallic handles

YASDA 7, 8, 21 (A=220)
YASDA 6, 35 (A=320)

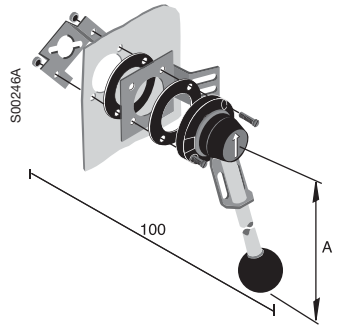

Door drilling for YASDA:

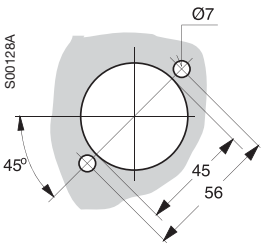

Stainless steel handles

OHM_

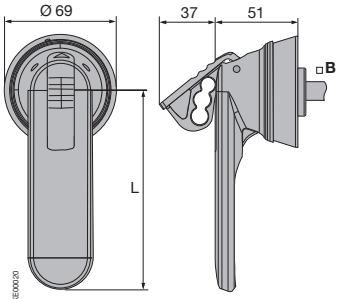

Handle type	OHM65L6	OHM125L12	OHM175L12	OHM275L12
L	65	125	175	275
□B	6	12	12	12

Door drilling for OHM_

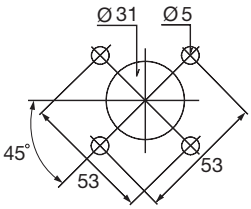

Minimum distance L between the hinge and the rotating shaft

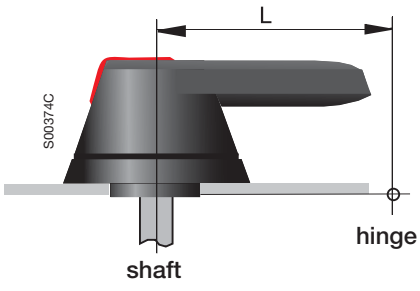

Sizes [A]	L [mm]	Suitable handles
30...250	60	OH_65J_
315...400	95	OH_95J_
630...800	150	OH_125J_, OH_145J_
630...800	175 275	OH_175J_ OH_275J_
630...800	220	YASDA7, 8

Accessories
Dimension drawings

6 and 8-pole switch fuses

OESAZW 2

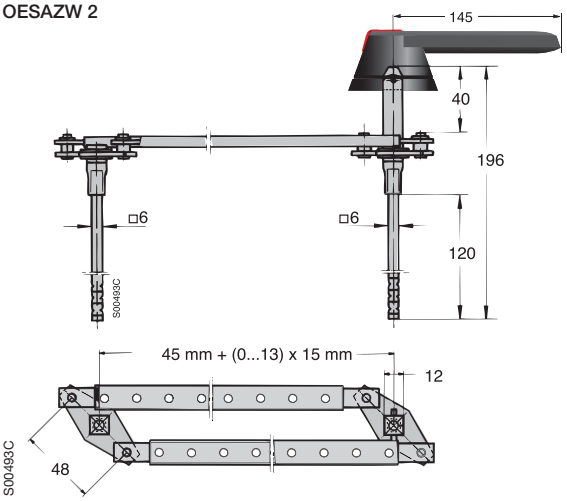

OETLZW 9

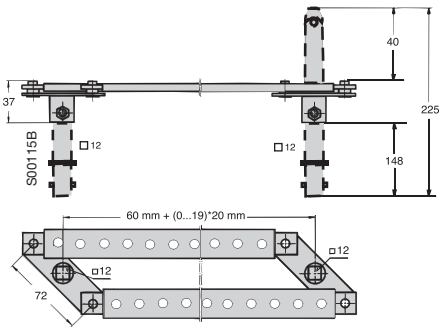

Mechanical interlock

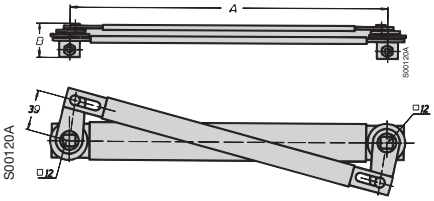

OETLZW 3, 14, 15

OETLZW 3: A= 300, B= 31
OETLZW 14: A= 250, B= 31
OETLZW 15: A0=500, B= 36

Change-over and by-pass switch fuses

OESAZW 1

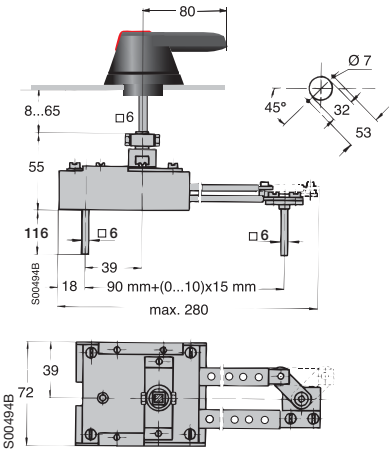

OETLZW11

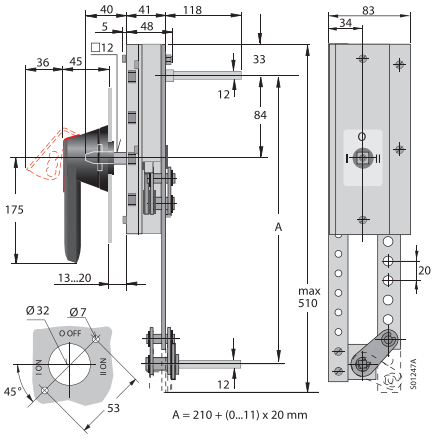

OETLZW12, 13

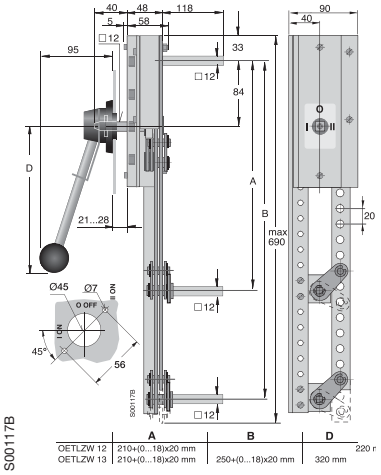

OTZW 25

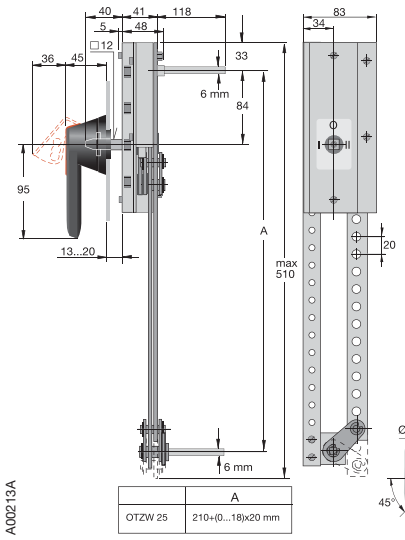

OTZW 26

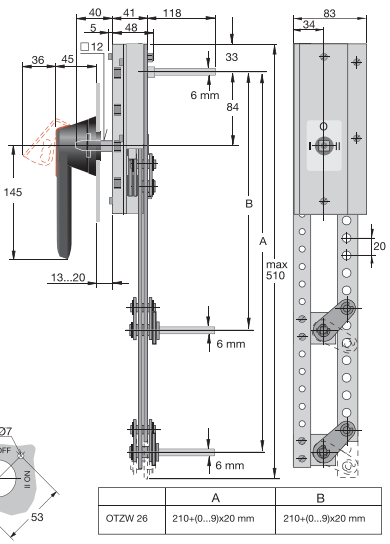

Handle indications and functions

- The handle indicates the position of the contacts with complete reliability in all situations.
  If the contacts are welded together, the handle doesn´t reach the OFF-position but remains between ON and OFF, maintaining the door interlock and padlocking is not possible to do.
- When operating the switch fuse to the Test-position with a test handle the test auxiliary contacts change position.
  The main contacts remain open.

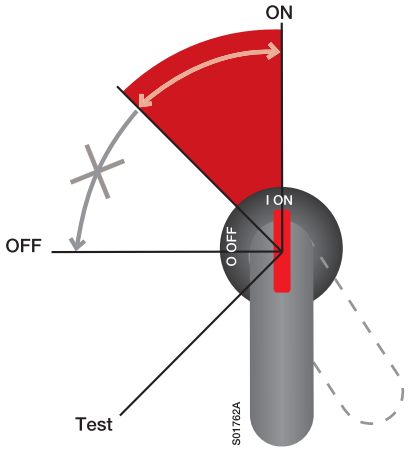

ON and OFF-functions of main and auxiliary contacts

Places of auxiliary contacts and Test ind.

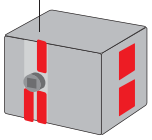

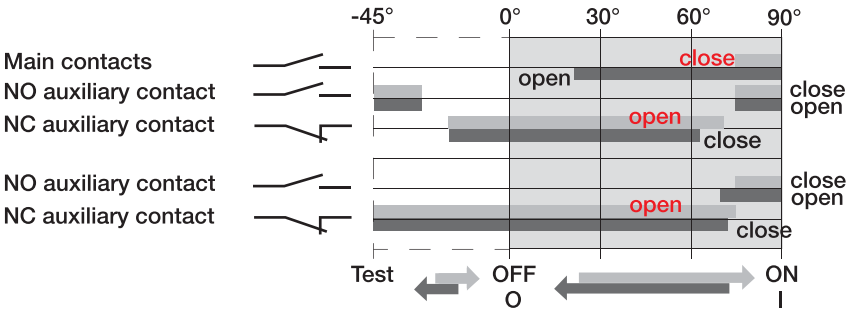

ON and OFF-functions of main and auxiliary contacts

OS mini

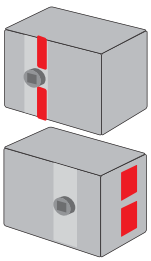

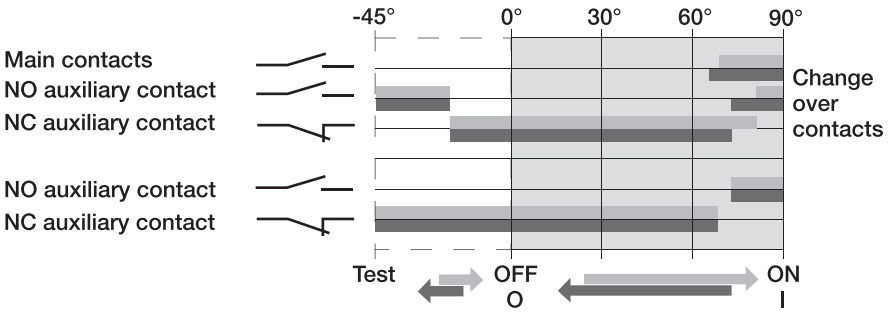

OS 30-63

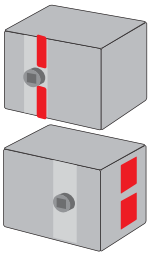

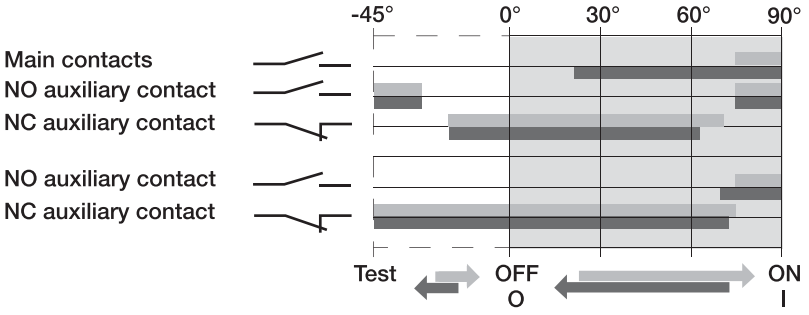

OS 100-160

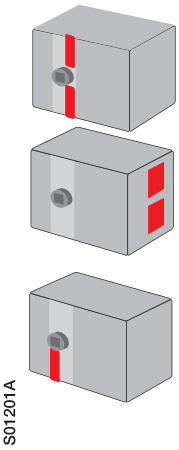

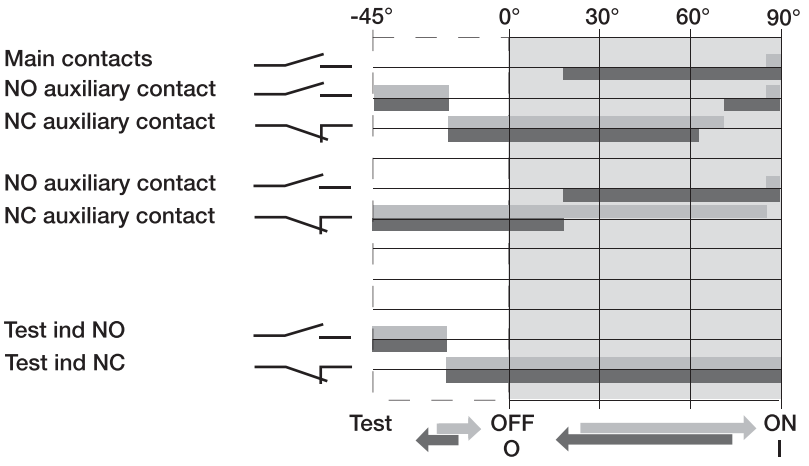

OS Mini

MCB-10
+ OESAZX 169 1 NO
MCB-01
+ OESAZX 169 1 NC

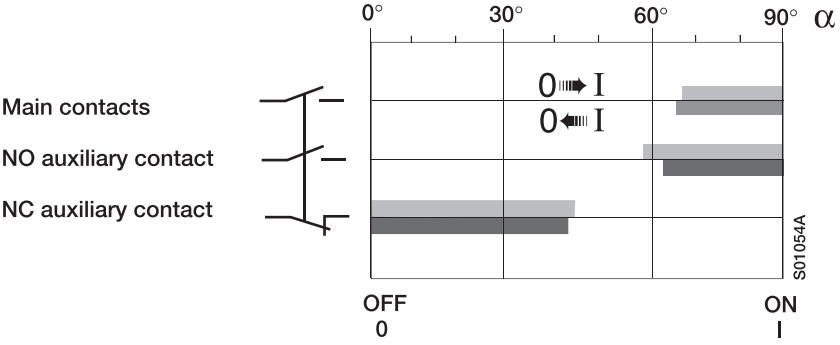

ON and OFF-functions of main and auxiliary contacts
OS200...1250

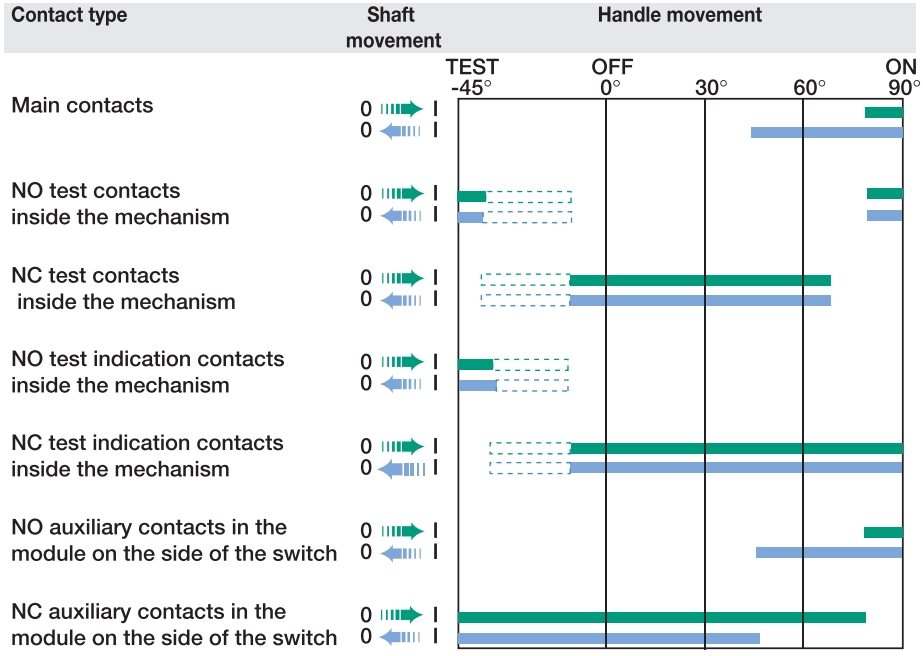

Index

Type	Order number	Page	Description
MCB-01	1SCA022150R5370	36	Auxiliary contact
MCB-10	1SCA022150R5110	36	Auxiliary contact
OA1G10	1SCA022353R4970	36	Auxiliary contact
OA1G10	1SCA022353R4970	37	Auxiliary contact
OA3G01	1SCA022456R7410	36	Auxiliary contact
OA3G01	1SCA022456R7410	37	Auxiliary contact
OA4B01	1SCA022276R9210	36	Auxiliary contact
OA4B10	1SCA022276R9050	36	Auxiliary contact
OA4B1C	1SCA022193R0150	36	Auxiliary contact
OA5G10	1SCA022660R2760	36	Auxiliary contact
OA6G01	1SCA022670R4500	36	Auxiliary contact
OEA28	1SCA022714R8810	37	Auxiliary contact
OESAZG5	1SCA022057R1380	39	Solid link
OESAZG98	1SCA022354R9650	39	Solid link
OESAZK98	1SCA022067R7370	39	Solid link
OESAZL79	1SCA022067R7110	39	Solid link
OESAZS36	1SCA022044R4600	39	Solid link
OESAZW1	1SCA022064R3710	43	Conversion kit
OESAZW2	1SCA022078R1600	43	Conversion kit
OESAZX 160	1SCA022186R3960	38	Neutral link
OESAZX 162	1SCA022193R0400	38	Neutral link
OESAZX 164	1SCA022202R9520	38	Neutral link
OESAZX 165	1SCA022202R9790	38	Neutral link
OESAZX169	1SCA022196R9360	36	Auxiliary contact
OESAZX171	1SCA022197R2580	38	Neutral link
OETLZK19	1SCA022093R1850	35	Extended shaft and shaft accessorie
OETLZW11	1SCA022078R0030	43	Conversion kit
OETLZW12	1SCA022078R0200	43	Conversion kit
OETLZW13	1SCA022078R0460	43	Conversion kit
OETLZW14	1SCA022077R3410	43	Conversion kit
OETLZW15	1SCA022081R9340	43	Conversion kit
OETLZW16	1SCA022095R2070	46	Cam attachment
OETLZW3	1SCA022049R0380	43	Conversion kit
OETLZW5	1SCA022052R3900	46	Cam attachment
OETLZW9	1SCA022061R3300	43	Conversion kit
OETLZX95	1SCA022083R5620	35	Extended shaft and shaft accessorie
OFAE 504	1SCA022007R6880	33	Optional handle
OFAE 505	1SCA022137R0770	33	Optional handle
OFAW00	1SCA022003R9680	39	Solid link
OFAW1	1SCA022003R9760	39	Solid link
OFAW2	1SCA022003R9840	39	Solid link
OFAW3	1SCA022003R9920	39	Solid link
OFM260	1SCA022459R8560	45	Fuse monitor
OFM690	1SCA022459R8480	45	Fuse monitor
OFMZX2	1SCA022475R9910	45	Fuse monitor
OFS260	1SCA022716R0180	45	Fuse monitor
OFS690	1SCA022715R9920	45	Fuse monitor
OHB 145J12E011	1SCA022399R8530	32	Optional handle
OHB 175J12E011	1SCA022459R9700	32	Optional handle
OHB125J12	1SCA022381R1560	32	Optional handle
OHB125J12T	1SCA022652R2220	32	Optional handle
OHB145J12	1SCA022381R2110	32	Optional handle
OHB145J12T	1SCA022652R2570	32	Optional handle
OHB150J12P	1SCA022865R9430	32	Optional handle
OHB175J12	1SCA022381R2450	32	Optional handle
OHB175J12T	1SCA022708R0740	32	Optional handle
OHB200J12P	1SCA022865R9510	32	Optional handle
OHB200J12PT	1SCA106510R1001	32	Optional handle
OHB275J12	1SCA022381R2960	32	Optional handle
OHB4	1SCA022439R4050	33	Optional handle
OHB65J6	1SCA022380R9660	32	Optional handle
OHB65J6T	1SCA022399R8110	32	Optional handle
OHB65J6TE001S	1SCA022532R2190	33	Optional handle
OHB65J6TE00S	1SCA109016R1001	33	Optional handle
OHB95J12	1SCA022381R0830	32	Optional handle
OHB95J12T	1SCA022736R1750	32	Optional handle
OHBS5	1SCA109015R1001	33	Optional handle
OHG 145J12E011	1SCA022460R7140	32	Optional handle
OHG 175J12E011	1SCA022461R2060	32	Optional handle
OHG125J12	1SCA022381R1640	32	Optional handle
OHG145J12	1SCA022381R2290	32	Optional handle
OHG175J12	1SCA022381R2610	32	Optional handle
OHG275J12	1SCA022381R3000	32	Optional handle
OHG65J6	1SCA022380R9740	32	Optional handle
OHG65J6T	1SCA022456R9620	32	Optional handle
OHG65J6TE001S	1SCA022532R2350	33	Optional handle
OHG65J6TE00S	1SCA109014R1001	33	Optional handle
OHG65J6TE00S	1SCA109014R1001	33	Optional handle
OHG95J12	1SCA022381R0910	32	Optional handle
OHM125L12	1SCA022739R1150	32	Optional handle
OHM175L12	1SCA022739R1230	32	Optional handle
OHM275L12	1SCA022832R4840	32	Optional handle
OHM65L6	1SCA022739R1070	32	Optional handle
OHY 145J12E011	1SCA022460R7060	32	Optional handle
OHY 175J12E011	1SCA022461R1920	32	Optional handle
OHY125J12	1SCA022381R1720	32	Optional handle
OHY125J12T	1SCA022652R2310	32	Optional handle
OHY145J12	1SCA022381R2370	32	Optional handle
OHY145J12T	1SCA022652R2650	32	Optional handle
OHY150J12P	1SCA101586R1001	32	Optional handle
OHY175J12	1SCA022381R2700	32	Optional handle
OHY200J12P	1SCA101587R1001	32	Optional handle
OHY200J12PT	1SCA111512R1001	32	Optional handle
OHY275J12	1SCA022381R3180	32	Optional handle
OHY65J6	1SCA022380R9820	32	Optional handle
OHY65J6T	1SCA022456R9540	32	Optional handle
OHY65J6TE001S	1SCA022532R2270	33	Optional handle
OHY65J6TE00S	1SCA022688R0140	33	Optional handle
OHY95J12	1SCA022381R1050	32	Optional handle
OHY95J12T	1SCA022736R1910	32	Optional handle
OHZX14	1SCA022851R6590	33	Optional handle
OS100B03	1SCA022456R9030	16	Switch fuse, BS-type

Index

Type	Order number	Page	Description
OS100B03W	1SCA022546R9530	16	Switch fuse, BS-type
OS100B04N2	1SCA022508R3690	16	Switch fuse, BS-type
OS100B04N2W	1SCA022552R0820	16	Switch fuse, BS-type
OS100B12	1SCA022483R4120	15	Switch fuse, BS-type
OS100B12W	1SCA022546R9610	15	Switch fuse, BS-type
OS100B22N1	1SCA022544R6240	15	Switch fuse, BS-type
OS100B22N1W	1SCA022552R0580	15	Switch fuse, BS-type
OS100BS30	1SCA022508R3000	25	Switch fuse, BS-type
OS100BS30W	1SCA022548R3010	25	Switch fuse, BS-type
OS100BS40N1	1SCA022544R7480	25	Switch fuse, BS-type
OS100BS40N1W	1SCA022552R4140	25	Switch fuse, BS-type
OS100BS40N2	1SCA022544R7560	25	Switch fuse, BS-type
OS100BS40N2W	1SCA022552R4490	25	Switch fuse, BS-type
OS100C03P	1SCA022456R8730	22	Switch fuse, CSA-type
OS100C03WP	1SCA022548R0000	22	Switch fuse, CSA-type
OS100C04FP	1SCA022507R6810	22	Switch fuse, CSA-type
OS100C04FWP	1SCA022552R3840	22	Switch fuse, CSA-type
OS100C04N2P	1SCA022508R3930	22	Switch fuse, CSA-type
OS100C04N2WP	1SCA022552R3760	22	Switch fuse, CSA-type
OS100C12P	1SCA022483R4630	22	Switch fuse, CSA-type
OS100C12WP	1SCA022548R0260	22	Switch fuse, CSA-type
OS100C22FP	1SCA022507R6990	22	Switch fuse, CSA-type
OS100C22FWP	1SCA022552R3500	22	Switch fuse, CSA-type
OS100C22N1P	1SCA022544R7130	22	Switch fuse, CSA-type
OS100C22N1WP	1SCA022552R3410	22	Switch fuse, CSA-type
OS100CS30P	1SCA022508R3420	29	Switch fuse, CSA-type
OS100CS30WP	1SCA022548R1150	29	Switch fuse, CSA-type
OS100CS40FP	1SCA022544R9260	29	Switch fuse, CSA-type
OS100CS40FWP	1SCA022552R6600	29	Switch fuse, CSA-type
OS100CS40N1P	1SCA022544R9000	29	Switch fuse, CSA-type
OS100CS40N1WP	1SCA022552R5970	29	Switch fuse, CSA-type
OS100CS40N2P	1SCA022544R9180	29	Switch fuse, CSA-type
OS100CS40N2WP	1SCA022552R6010	29	Switch fuse, CSA-type
OS100F03	1SCA022502R6460	19	Switch fuse, NFC-type
OS100F03W	1SCA022547R7390	19	Switch fuse, NFC-type
OS100F04F	1SCA022502R6540	19	Switch fuse, NFC-type
OS100F04FW	1SCA022552R2610	19	Switch fuse, NFC-type
OS100F04N2	1SCA022508R4580	19	Switch fuse, NFC-type
OS100F04N2W	1SCA022552R2440	19	Switch fuse, NFC-type
OS100F12	1SCA022508R2450	19	Switch fuse, NFC-type
OS100F12W	1SCA022547R7550	19	Switch fuse, NFC-type
OS100F22F	1SCA022508R2610	19	Switch fuse, NFC-type
OS100F22FW	1SCA022552R2280	19	Switch fuse, NFC-type
OS100F22N1	1SCA022544R6670	19	Switch fuse, NFC-type
OS100F22N1W	1SCA022552R2010	19	Switch fuse, NFC-type
OS100FS30	1SCA022502R6620	27	Switch fuse, NFC-type
OS100FS30W	1SCA022547R8010	27	Switch fuse, NFC-type
OS100FS40F	1SCA022502R6710	27	Switch fuse, NFC-type
OS100FS40FW	1SCA022552R5540	27	Switch fuse, NFC-type
OS100FS40N1	1SCA022544R8370	27	Switch fuse, NFC-type
OS100FS40N1W	1SCA022552R5030	27	Switch fuse, NFC-type
OS100FS40N2	1SCA022544R8450	27	Switch fuse, NFC-type
OS100FS40N2W	1SCA022552R5200	27	Switch fuse, NFC-type
OS100J03P	1SCA022456R8810	20	Switch fuse, Neozed, UL- and CSA-type
OS100J03WP	1SCA022547R4960	20	Switch fuse, Neozed, UL- and CSA-type
OS100J04FP	1SCA022508R2700	20	Switch fuse, Neozed, UL- and CSA-type
OS100J04FWP	1SCA022552R3330	20	Switch fuse, Neozed, UL- and CSA-type
OS100J04N2P	1SCA022544R7050	20	Switch fuse, Neozed, UL- and CSA-type
OS100J04N2WP	1SCA022552R3250	20	Switch fuse, Neozed, UL- and CSA-type
OS100J12P	1SCA022483R4550	20	Switch fuse, Neozed, UL- and CSA-type
OS100J12WP	1SCA022547R5000	20	Switch fuse, Neozed, UL- and CSA-type
OS100J22FP	1SCA022508R2960	20	Switch fuse, Neozed, UL- and CSA-type
OS100J22FWP	1SCA022552R3170	20	Switch fuse, Neozed, UL- and CSA-type
OS100J22N1P	1SCA022544R6830	20	Switch fuse, Neozed, UL- and CSA-type
OS100J22N1WP	1SCA022552R3090	20	Switch fuse, Neozed, UL- and CSA-type
OS100JS30P	1SCA022508R3510	28	Switch fuse, Neozed, UL- and CSA-type
OS100JS30WP	1SCA022547R5510	28	Switch fuse, Neozed, UL- and CSA-type
OS100JS40FP	1SCA022544R8960	28	Switch fuse, Neozed, UL- and CSA-type
OS100JS40FWP	1SCA022552R5890	28	Switch fuse, Neozed, UL- and CSA-type
OS100JS40N1P	1SCA022544R8700	28	Switch fuse, Neozed, UL- and CSA-type
OS100JS40N1WP	1SCA022552R5620	28	Switch fuse, Neozed, UL- and CSA-type
OS100JS40N2P	1SCA022544R8880	28	Switch fuse, Neozed, UL- and CSA-type
OS100JS40N2WP	1SCA022552R5710	28	Switch fuse, Neozed, UL- and CSA-type
OS1200L03P	1SCA105467R1001	21	Switch fuse, UL- and SCA-type
OS1250B03K	1SCA108715R1001	18	Switch fuse, BS-type
OS1250B03N3P	1SCA107936R1001	17	Switch fuse, BS-type
OS1250B03P	1SCA105250R1001	17	Switch fuse, BS-type
OS1250B04N2K	1SCA108717R1001	18	Switch fuse, BS-type
OS1250B04N2P	1SCA105469R1001	17	Switch fuse, BS-type
OS1250B12P	1SCA105470R1001	17	Switch fuse, BS-type
OS1250B22N2P	1SCA107937R1001	17	Switch fuse, BS-type
OS1250D03K	1SCA108718R1001	14	Switch fuse, DIN-type
OS1250D03N3P	1SCA107932R1001	13	Switch fuse, DIN-type
OS1250D03P	1SCA105475R1001	13	Switch fuse, DIN-type
OS1250D04FP	1SCA105473R1001	13	Switch fuse, DIN-type
OS1250D04N2K	1SCA108719R1001	14	Switch fuse, DIN-type
OS1250D04N2P	1SCA105248R1001	13	Switch fuse, DIN-type
OS1250D12P	1SCA105246R1001	13	Switch fuse, DIN-type
OS1250D22N2P	1SCA107933R1001	13	Switch fuse, DIN-type
OS1250DA03K	1SCA108720R1001	14	Switch fuse, DIN-type
OS1250DA03N3P	1SCA107934R1001	13	Switch fuse, DIN-type
OS1250DA03P	1SCA105238R1001	13	Switch fuse, DIN-type
OS1250DA04FP	1SCA105240R1001	13	Switch fuse, DIN-type

Index

Type	Order number	Page	Description
OS1250DA04N2K	1SCA108721R1001	14	Switch fuse, DIN-type
OS1250DA04N2P	1SCA105243R1001	13	Switch fuse, DIN-type
OS1250DA12P	1SCA105241R1001	13	Switch fuse, DIN-type
OS1250DA22N2P	1SCA107935R1001	13	Switch fuse, DIN-type
OS125B03	1SCA022456R9110	16	Switch fuse, BS-type
OS125B03W	1SCA022546R4220	16	Switch fuse, BS-type
OS125B04N2	1SCA022508R3850	16	Switch fuse, BS-type
OS125B04N2W	1SCA022552R0910	16	Switch fuse, BS-type
OS125B12	1SCA022483R4390	15	Switch fuse, BS-type
OS125B12W	1SCA022546R4730	15	Switch fuse, BS-type
OS125B22N1	1SCA022544R6320	15	Switch fuse, BS-type
OS125B22N1W	1SCA022552R6780	15	Switch fuse, BS-type
OS125BS30	1SCA022508R3340	25	Switch fuse, BS-type
OS125BS30W	1SCA022548R1310	25	Switch fuse, BS-type
OS125BS40N1	1SCA022544R7720	25	Switch fuse, BS-type
OS125BS40N1W	1SCA022552R4220	25	Switch fuse, BS-type
OS125BS40N2	1SCA022544R7810	25	Switch fuse, BS-type
OS125BS40N2W	1SCA022552R4570	25	Switch fuse, BS-type
OS125D03	1SCA022469R8780	12	Switch fuse, DIN-type
OS125D03W	1SCA022537R2110	12	Switch fuse, DIN-type
OS125D04F	1SCA022469R8860	12	Switch fuse, DIN-type
OS125D04FW	1SCA022537R3420	12	Switch fuse, DIN-type
OS125D04N2	1SCA022507R3030	12	Switch fuse, DIN-type
OS125D04N2W	1SCA022538R2250	12	Switch fuse, DIN-type
OS125D12	1SCA022472R1860	12	Switch fuse, DIN-type
OS125D12W	1SCA022537R2020	12	Switch fuse, DIN-type
OS125D22F	1SCA022507R2900	12	Switch fuse, DIN-type
OS125D22FW	1SCA022537R3260	12	Switch fuse, DIN-type
OS125D22N1	1SCA022537R8730	12	Switch fuse, DIN-type
OS125D22N1W	1SCA022537R8900	12	Switch fuse, DIN-type
OS125DS30	1SCA022502R6890	23	Switch fuse, DIN-type
OS125DS30W	1SCA022538R3060	23	Switch fuse, DIN-type
OS125DS40F	1SCA022502R6970	23	Switch fuse, DIN-type
OS125DS40FW	1SCA022543R2290	23	Switch fuse, DIN-type
OS125DS40N1	1SCA022543R2370	23	Switch fuse, DIN-type
OS125DS40N1W	1SCA022543R2450	23	Switch fuse, DIN-type
OS125DS40N2	1SCA101627R1001	23	Switch fuse, DIN-type
OS125DS40N2W	1SCA022552R3920	23	Switch fuse, DIN-type
OS125F03	1SCA022502R7010	19	Switch fuse, NFC-type
OS125F03W	1SCA022547R0380	19	Switch fuse, NFC-type
OS125F04F	1SCA022503R0810	19	Switch fuse, NFC-type
OS125F04FW	1SCA022552R2790	19	Switch fuse, NFC-type
OS125F04N2	1SCA022505R1570	19	Switch fuse, NFC-type
OS125F04N2W	1SCA022552R2520	19	Switch fuse, NFC-type
OS125F12	1SCA022507R7290	19	Switch fuse, NFC-type
OS125F12W	1SCA022547R0620	19	Switch fuse, NFC-type
OS125F22F	1SCA022507R7370	19	Switch fuse, NFC-type
OS125F22FW	1SCA022552R2360	19	Switch fuse, NFC-type
OS125F22N1	1SCA022544R6750	19	Switch fuse, NFC-type
OS125F22N1W	1SCA022552R2100	19	Switch fuse, NFC-type
OS125FS30	1SCA022502R7270	27	Switch fuse, NFC-type
OS125FS30W	1SCA022547R2080	27	Switch fuse, NFC-type
OS125FS40F	1SCA022502R7350	27	Switch fuse, NFC-type
OS125FS40FW	1SCA022552R5460	27	Switch fuse, NFC-type
OS125FS40N1	1SCA022544R8530	27	Switch fuse, NFC-type
OS125FS40N1W	1SCA022552R5110	27	Switch fuse, NFC-type
OS125FS40N2	1SCA022544R8610	27	Switch fuse, NFC-type
OS125FS40N2W	1SCA022552R5380	27	Switch fuse, NFC-type
OS160B03	1SCA022536R0870	16	Switch fuse, BS-type
OS160B03W	1SCA022543R3770	16	Switch fuse, BS-type
OS160B04N2	1SCA022508R3770	16	Switch fuse, BS-type
OS160B04N2W	1SCA022543R3930	16	Switch fuse, BS-type
OS160B12	1SCA022483R4470	15	Switch fuse, BS-type
OS160B12W	1SCA022545R9650	15	Switch fuse, BS-type
OS160B22N1	1SCA022544R6590	15	Switch fuse, BS-type
OS160B22N1W	1SCA022552R0740	15	Switch fuse, BS-type
OS160BS30	1SCA022508R3260	25	Switch fuse, BS-type
OS160BS30W	1SCA022548R1230	25	Switch fuse, BS-type
OS160BS40N1	1SCA022544R8020	25	Switch fuse, BS-type
OS160BS40N1W	1SCA022552R4310	25	Switch fuse, BS-type
OS160BS40N2	1SCA022544R8110	25	Switch fuse, BS-type
OS160BS40N2W	1SCA022552R4650	25	Switch fuse, BS-type
OS160D03	1SCA022456R8310	12	Switch fuse, DIN-type
OS160D03W	1SCA022510R6310	12	Switch fuse, DIN-type
OS160D04F	1SCA022469R8940	12	Switch fuse, DIN-type
OS160D04FW	1SCA022510R6570	12	Switch fuse, DIN-type
OS160D04N2	1SCA022507R2650	12	Switch fuse, DIN-type
OS160D04N2W	1SCA022510R6490	12	Switch fuse, DIN-type
OS160D12	1SCA022472R0030	12	Switch fuse, DIN-type
OS160D12W	1SCA022510R6650	12	Switch fuse, DIN-type
OS160D22F	1SCA022506R0560	12	Switch fuse, DIN-type
OS160D22FW	1SCA022510R6810	12	Switch fuse, DIN-type
OS160D22N1	1SCA022537R6520	12	Switch fuse, DIN-type
OS160D22N1W	1SCA022537R8570	12	Switch fuse, DIN-type
OS160DS30	1SCA022458R1830	23	Switch fuse, DIN-type
OS160DS30W	1SCA022538R2410	23	Switch fuse, DIN-type
OS160DS40F	1SCA022502R7430	23	Switch fuse, DIN-type
OS160DS40FW	1SCA022538R6080	23	Switch fuse, DIN-type
OS160DS40N1	1SCA022537R6280	23	Switch fuse, DIN-type
OS160DS40N1W	1SCA022538R6590	23	Switch fuse, DIN-type
OS160DS40N2	1SCA022566R6280	23	Switch fuse, DIN-type
OS160DS40N2W	1SCA022552R4060	23	Switch fuse, DIN-type
OS16FD1201	1SCA108788R1001	20	Switch fuse, Neozed, UL- and CSA-type
OS16FD2201F	1SCA108993R1001	20	Switch fuse, Neozed, UL- and CSA-type
OS16FD2201N1	1SCA108789R1001	20	Switch fuse, Neozed, UL- and CSA-type
OS16FDS3001	1SCA108994R1001	28	Switch fuse, Neozed, UL- and CSA-type
OS16FDS4001F	1SCA108996R1001	28	Switch fuse, Neozed, UL- and CSA-type
OS16FDS4001N1	1SCA108995R1001	28	Switch fuse, Neozed, UL- and CSA-type
OS200B03K	1SCA022763R6950	18	Switch fuse, BS-type
OS200B03N3P	1SCA022750R0620	17	Switch fuse, BS-type

Index

Type	Order number	Page	Description
OS200B03P	1SCA022709R9330	17	Switch fuse, BS-type
OS200B04N2K	1SCA022763R7090	18	Switch fuse, BS-type
OS200B04N2P	1SCA022709R9410	17	Switch fuse, BS-type
OS200B12P	1SCA022721R3210	17	Switch fuse, BS-type
OS200B22N2P	1SCA022721R3300	17	Switch fuse, BS-type
OS200BS03	1SCA022860R3810	26	Switch fuse, BS-type
OS200BS03K	1SCA022860R3990	26	Switch fuse, BS-type
OS200BS04N2	1SCA022870R7510	26	Switch fuse, BS-type
OS200BS04N2K	1SCA022870R7690	26	Switch fuse, BS-type
OS200BS30	1SCA022870R7770	26	Switch fuse, BS-type
OS200BS30K	1SCA022870R7850	26	Switch fuse, BS-type
OS200BS40N2	1SCA022870R8150	26	Switch fuse, BS-type
OS200BS40N2K	1SCA022870R8230	26	Switch fuse, BS-type
OS200D03K	1SCA022764R7130	14	Switch fuse, DIN-type
OS200D03N3P	1SCA022749R8710	13	Switch fuse, DIN-type
OS200D03P	1SCA022709R9500	13	Switch fuse, DIN-type
OS200D04FP	1SCA022725R4750	13	Switch fuse, DIN-type
OS200D04N2K	1SCA022768R7430	14	Switch fuse, DIN-type
OS200D04N2P	1SCA022709R9680	13	Switch fuse, DIN-type
OS200D12P	1SCA022721R3050	13	Switch fuse, DIN-type
OS200D22N2P	1SCA022721R3130	13	Switch fuse, DIN-type
OS200DS03	1SCA022871R0720	24	Switch fuse, DIN-type
OS200DS03K	1SCA022871R0810	24	Switch fuse, DIN-type
OS200DS04F	1SCA022871R0990	24	Switch fuse, DIN-type
OS200DS04FK	1SCA022871R1020	24	Switch fuse, DIN-type
OS200DS30	1SCA022871R1370	24	Switch fuse, DIN-type
OS200DS30K	1SCA022871R1450	24	Switch fuse, DIN-type
OS200DS40F	1SCA022871R1530	24	Switch fuse, DIN-type
OS200DS40FK	1SCA022871R1610	24	Switch fuse, DIN-type
OS200DZ03P	1SCA022797R3440	13	Switch fuse, DIN-type
OS200DZ12P	1SCA022820R9150	13	Switch fuse, DIN-type
OS200J03P	1SCA022709R9760	21	Switch fuse, UL- and SCA-type
OS20FB12A1	1SCA108790R1001	15	Switch fuse, BS-type
OS20FB22A1N1	1SCA108796R1001	15	Switch fuse, BS-type
OS20FBS30A1	1SCA108997R1001	25	Switch fuse, BS-type
OS20FBS40A1N1	1SCA108998R1001	25	Switch fuse, BS-type
OS250B03K	1SCA022763R6010	18	Switch fuse, BS-type
OS250B03N3P	1SCA022750R8010	17	Switch fuse, BS-type
OS250B03P	1SCA022750R6660	17	Switch fuse, BS-type
OS250B04N2K	1SCA022763R6280	18	Switch fuse, BS-type
OS250B04N2P	1SCA022750R7800	17	Switch fuse, BS-type
OS250B12P	1SCA022778R9860	17	Switch fuse, BS-type
OS250B22N2P	1SCA022778R9940	17	Switch fuse, BS-type
OS250BS03	1SCA022860R4370	26	Switch fuse, BS-type
OS250BS03K	1SCA022860R4450	26	Switch fuse, BS-type
OS250BS04N2	1SCA022870R8310	26	Switch fuse, BS-type
OS250BS04N2K	1SCA022870R8400	26	Switch fuse, BS-type
OS250BS30	1SCA022870R8580	26	Switch fuse, BS-type
OS250BS30K	1SCA022870R8660	26	Switch fuse, BS-type
OS250BS40N2	1SCA022870R8910	26	Switch fuse, BS-type
OS250BS40N2K	1SCA022870R9040	26	Switch fuse, BS-type
OS250D03K	1SCA022763R6360	14	Switch fuse, DIN-type
OS250D03N3P	1SCA022749R9430	13	Switch fuse, DIN-type
OS250D03P	1SCA022719R0090	13	Switch fuse, DIN-type
OS250D04FP	1SCA022726R8620	13	Switch fuse, DIN-type
OS250D04N2K	1SCA022763R6440	14	Switch fuse, DIN-type
OS250D04N2P	1SCA022719R2380	13	Switch fuse, DIN-type
OS250D12P	1SCA022726R8380	13	Switch fuse, DIN-type
OS250D22N2P	1SCA022726R8460	13	Switch fuse, DIN-type
OS250DS03	1SCA022860R3050	24	Switch fuse, DIN-type
OS250DS03K	1SCA022860R3130	24	Switch fuse, DIN-type
OS250DS04F	1SCA022860R3210	24	Switch fuse, DIN-type
OS250DS04FK	1SCA022860R3300	24	Switch fuse, DIN-type
OS250DS30	1SCA022871R2180	24	Switch fuse, DIN-type
OS250DS30K	1SCA022871R2260	24	Switch fuse, DIN-type
OS250DS40F	1SCA022871R2340	24	Switch fuse, DIN-type
OS250DS40FK	1SCA022871R2420	24	Switch fuse, DIN-type
OS25FF1210	1SCA108636R1001	19	Switch fuse, NFC-type
OS25FF2210F	1SCA108637R1001	19	Switch fuse, NFC-type
OS25FF2210N1	1SCA108638R1001	19	Switch fuse, NFC-type
OS25FFS3010	1SCA108639R1001	27	Switch fuse, NFC-type
OS25FFS4010F	1SCA108640R1001	27	Switch fuse, NFC-type
OS25FFS4010N1	1SCA108661R1001	27	Switch fuse, NFC-type
OS30C12P	1SCA022471R9110	22	Switch fuse, CSA-type
OS30C22FP	1SCA022472R0380	22	Switch fuse, CSA-type
OS30C22N1P	1SCA022471R9370	22	Switch fuse, CSA-type
OS30CS30P	1SCA022471R9290	29	Switch fuse, CSA-type
OS30CS40FP	1SCA022472R1350	29	Switch fuse, CSA-type
OS30CS40N1P	1SCA022471R9700	29	Switch fuse, CSA-type
OS30FACC12P	1SCA108817R1001	20	Switch fuse, Neozed, UL- and CSA-type
OS30FACC22FP	1SCA108821R1001	20	Switch fuse, Neozed, UL- and CSA-type
OS30FACCS30P	1SCA108999R1001	28	Switch fuse, Neozed, UL- and CSA-type
OS30FAJ12P	1SCA108828R1001	20	Switch fuse, Neozed, UL- and CSA-type
OS30FAJ22FP	1SCA108831R1001	20	Switch fuse, Neozed, UL- and CSA-type
OS30FAJS30P	1SCA108838R1001	28	Switch fuse, Neozed, UL- and CSA-type
OS315B03K	1SCA022763R6520	18	Switch fuse, BS-type
OS315B03N3P	1SCA022753R8940	17	Switch fuse, BS-type
OS315B03P	1SCA022719R0680	17	Switch fuse, BS-type
OS315B04N2K	1SCA022763R6610	18	Switch fuse, BS-type
OS315B04N2P	1SCA022719R2710	17	Switch fuse, BS-type
OS315B12P	1SCA022753R2310	17	Switch fuse, BS-type
OS315B22N2P	1SCA022753R3390	17	Switch fuse, BS-type
OS315BS03	1SCA022860R4700	26	Switch fuse, BS-type
OS315BS03K	1SCA022860R4880	26	Switch fuse, BS-type
OS315BS04N2	1SCA022870R9120	26	Switch fuse, BS-type
OS315BS04N2K	1SCA022870R9210	26	Switch fuse, BS-type
OS315BS30	1SCA022870R9390	26	Switch fuse, BS-type
OS315BS30K	1SCA022870R9470	26	Switch fuse, BS-type
OS315BS40N2	1SCA022870R9710	26	Switch fuse, BS-type
OS315BS40N2K	1SCA022870R9800	26	Switch fuse, BS-type

Index

Type	Order number	Page	Description
OS32B12	1SCA022470R7610	15	Switch fuse, BS-type
OS32B22N1	1SCA022471R7080	15	Switch fuse, BS-type
OS32BS30	1SCA022471R6940	25	Switch fuse, BS-type
OS32BS40N1	1SCA022471R7410	25	Switch fuse, BS-type
OS32D12	1SCA022456R9710	12	Switch fuse, DIN-type
OS32D22F	1SCA022456R9970	12	Switch fuse, DIN-type
OS32D22N1	1SCA022456R9890	12	Switch fuse, DIN-type
OS32DS30	1SCA022471R3090	23	Switch fuse, DIN-type
OS32DS40F	1SCA022472R0620	23	Switch fuse, DIN-type
OS32DS40N1	1SCA022471R6600	23	Switch fuse, DIN-type
OS32FB12A1	1SCA108840R1001	15	Switch fuse, BS-type
OS32FB12A2	1SCA108847R1001	15	Switch fuse, BS-type
OS32FB12F1	1SCA108851R1001	15	Switch fuse, BS-type
OS32FB22A1N1	1SCA108853R1001	15	Switch fuse, BS-type
OS32FB22A2N1	1SCA108863R1001	15	Switch fuse, BS-type
OS32FB22F1N1	1SCA109003R1001	15	Switch fuse, BS-type
OS32FBS30A1	1SCA108877R1001	25	Switch fuse, BS-type
OS32FBS30A2	1SCA108882R1001	25	Switch fuse, BS-type
OS32FBS30F1	1SCA109004R1001	25	Switch fuse, BS-type
OS32FBS40A1N1	1SCA109006R1001	25	Switch fuse, BS-type
OS32FBS40A2N1	1SCA109007R1001	25	Switch fuse, BS-type
OS32FBS40F1N1	1SCA109005R1001	25	Switch fuse, BS-type
OS32FF1214	1SCA108642R1001	19	Switch fuse, NFC-type
OS32FF2214F	1SCA108643R1001	19	Switch fuse, NFC-type
OS32FF2214N1	1SCA108645R1001	19	Switch fuse, NFC-type
OS32FFS3014	1SCA108646R1001	27	Switch fuse, NFC-type
OS32FFS4014F	1SCA108647R1001	27	Switch fuse, NFC-type
OS32FFS4014N1	1SCA108649R1001	27	Switch fuse, NFC-type
OS35FD1202	1SCA108908R1001	20	Switch fuse, Neozed, UL- and CSA-type
OS35FD2202F	1SCA109008R1001	20	Switch fuse, Neozed, UL- and CSA-type
OS35FD2202N1	1SCA108911R1001	20	Switch fuse, Neozed, UL- and CSA-type
OS35FDS3002	1SCA109009R1001	28	Switch fuse, Neozed, UL- and CSA-type
OS35FDS4002F	1SCA109011R1001	28	Switch fuse, Neozed, UL- and CSA-type
OS35FDS4002N1	1SCA109010R1001	28	Switch fuse, Neozed, UL- and CSA-type
OS400B03K	1SCA022763R6790	18	Switch fuse, BS-type
OS400B03N3P	1SCA022753R9160	17	Switch fuse, BS-type
OS400B03P	1SCA022719R0840	17	Switch fuse, BS-type
OS400B04N2K	1SCA022763R6870	18	Switch fuse, BS-type
OS400B04N2P	1SCA022719R2890	17	Switch fuse, BS-type
OS400B12P	1SCA022753R3470	17	Switch fuse, BS-type
OS400B22N2P	1SCA022753R7200	17	Switch fuse, BS-type
OS400BS03	1SCA022860R5180	26	Switch fuse, BS-type
OS400BS03K	1SCA022860R5260	26	Switch fuse, BS-type
OS400BS04N2	1SCA022870R9980	26	Switch fuse, BS-type
OS400BS04N2K	1SCA022871R0050	26	Switch fuse, BS-type
OS400BS30	1SCA022871R0130	26	Switch fuse, BS-type
OS400BS30K	1SCA022871R0210	26	Switch fuse, BS-type
OS400BS40N2	1SCA022871R0560	26	Switch fuse, BS-type
OS400BS40N2K	1SCA022871R0640	26	Switch fuse, BS-type
OS400D03K	1SCA022779R5410	14	Switch fuse, DIN-type
OS400D03N3P	1SCA022753R9320	13	Switch fuse, DIN-type
OS400D03P	1SCA022719R0250	13	Switch fuse, DIN-type
OS400D04FP	1SCA022753R7110	13	Switch fuse, DIN-type
OS400D04N2K	1SCA022763R7250	14	Switch fuse, DIN-type
OS400D04N2P	1SCA022719R2460	13	Switch fuse, DIN-type
OS400D12P	1SCA022753R3800	13	Switch fuse, DIN-type
OS400D22N2P	1SCA022753R1770	13	Switch fuse, DIN-type
OS400DS03	1SCA022860R3480	24	Switch fuse, DIN-type
OS400DS03K	1SCA022860R3560	24	Switch fuse, DIN-type
OS400DS04F	1SCA022860R3640	24	Switch fuse, DIN-type
OS400DS04FK	1SCA022860R3720	24	Switch fuse, DIN-type
OS400DS30	1SCA022871R2850	24	Switch fuse, DIN-type
OS400DS30K	1SCA022871R2930	24	Switch fuse, DIN-type
OS400DS40F	1SCA022871R3070	24	Switch fuse, DIN-type
OS400DS40FK	1SCA022871R3150	24	Switch fuse, DIN-type
OS400J03P	1SCA022719R1140	21	Switch fuse, UL- and SCA-type
OS40FD12000	1SCA108914R1001	12	Switch fuse, DIN-type
OS40FD22000N1	1SCA108938R1001	12	Switch fuse, DIN-type
OS40FDS30000	1SCA108942R1001	23	Switch fuse, DIN-type
OS40FDS30000-N	1SCA109012R1001	23	Switch fuse, DIN-type
OS40FDS40000N1	1SCA108954R1001	23	Switch fuse, DIN-type
OS50F12	1SCA022434R8020	19	Switch fuse, NFC-type
OS50F22F	1SCA022472R0110	19	Switch fuse, NFC-type
OS50F22N1	1SCA022471R0820	19	Switch fuse, NFC-type
OS50FS30	1SCA022471R1040	27	Switch fuse, NFC-type
OS50FS40F	1SCA022472R1190	27	Switch fuse, NFC-type
OS50FS40N1	1SCA022471R9610	27	Switch fuse, NFC-type
OS600J03P	1SCA022825R8870	21	Switch fuse, UL- and SCA-type
OS60C12P	1SCA022434R8370	22	Switch fuse, CSA-type
OS60C22FP	1SCA022472R0200	22	Switch fuse, CSA-type
OS60C22N1P	1SCA022471R1470	22	Switch fuse, CSA-type
OS60CS30P	1SCA022471R0310	29	Switch fuse, CSA-type
OS60CS40FP	1SCA022472R1270	29	Switch fuse, CSA-type
OS60CS40N1P	1SCA022471R9450	29	Switch fuse, CSA-type
OS60J12P	1SCA022434R8290	20	Switch fuse, Neozed, UL- and CSA-type
OS60J22FP	1SCA022472R0460	20	Switch fuse, Neozed, UL- and CSA-type
OS60J22N1P	1SCA022471R1210	20	Switch fuse, Neozed, UL- and CSA-type
OS60JS30P	1SCA022471R0580	28	Switch fuse, Neozed, UL- and CSA-type
OS60JS40FP	1SCA022472R1430	28	Switch fuse, Neozed, UL- and CSA-type
OS60JS40N1P	1SCA022471R9880	28	Switch fuse, Neozed, UL- and CSA-type
OS630B03K	1SCA108708R1001	18	Switch fuse, BS-type
OS630B03N3P	1SCA100860R1001	17	Switch fuse, BS-type
OS630B03P	1SCA022825R5850	17	Switch fuse, BS-type
OS630B04N2K	1SCA108710R1001	18	Switch fuse, BS-type
OS630B04N2P	1SCA022825R6230	17	Switch fuse, BS-type
OS630B12P	1SCA022825R6400	17	Switch fuse, BS-type
OS630B22N2P	1SCA022825R6660	17	Switch fuse, BS-type
OS630BS03	1SCA108141R1001	26	Switch fuse, BS-type

Index

Type	Order number	Page	Description
OS630BS03K	1SCA108142R1001	26	Switch fuse, BS-type
OS630BS04N2	1SCA108145R1001	26	Switch fuse, BS-type
OS630BS04N2K	1SCA108146R1001	26	Switch fuse, BS-type
OS630BS30	1SCA108147R1001	26	Switch fuse, BS-type
OS630BS30K	1SCA108148R1001	26	Switch fuse, BS-type
OS630BS40N2	1SCA108152R1001	26	Switch fuse, BS-type
OS630BS40N2K	1SCA108151R1001	26	Switch fuse, BS-type
OS630D03K	1SCA108704R1001	14	Switch fuse, DIN-type
OS630D03N3P	1SCA100858R1001	13	Switch fuse, DIN-type
OS630D03P	1SCA022825R2830	13	Switch fuse, DIN-type
OS630D04FP	1SCA022825R4610	13	Switch fuse, DIN-type
OS630D04N2K	1SCA108705R1001	14	Switch fuse, DIN-type
OS630D04N2P	1SCA022825R4290	13	Switch fuse, DIN-type
OS630D12P	1SCA022825R3810	13	Switch fuse, DIN-type
OS630D22N2P	1SCA022825R4450	13	Switch fuse, DIN-type
OS630DS03	1SCA108128R1001	24	Switch fuse, DIN-type
OS630DS03K	1SCA108129R1001	24	Switch fuse, DIN-type
OS630DS04F	1SCA108131R1001	24	Switch fuse, DIN-type
OS630DS04FK	1SCA108132R1001	24	Switch fuse, DIN-type
OS630DS30	1SCA108135R1001	24	Switch fuse, DIN-type
OS630DS30K	1SCA108136R1001	24	Switch fuse, DIN-type
OS630DS40F	1SCA108137R1001	24	Switch fuse, DIN-type
OS630DS40FK	1SCA108138R1001	24	Switch fuse, DIN-type
OS63B12	1SCA022434R7990	15	Switch fuse, BS-type
OS63B22N1	1SCA022469R2580	15	Switch fuse, BS-type
OS63BS30	1SCA022471R0150	25	Switch fuse, BS-type
OS63BS40N1	1SCA022471R7320	25	Switch fuse, BS-type
OS63D12	1SCA022434R7810	12	Switch fuse, DIN-type
OS63D22F	1SCA022456R9460	12	Switch fuse, DIN-type
OS63D22N1	1SCA022457R0040	12	Switch fuse, DIN-type
OS63DS30	1SCA022467R6970	23	Switch fuse, DIN-type
OS63DS40F	1SCA022472R0540	23	Switch fuse, DIN-type
OS63DS40N1	1SCA022471R5890	23	Switch fuse, DIN-type
OS63F12	1SCA022434R8110	19	Switch fuse, NFC-type
OS63F22F	1SCA022471R9960	19	Switch fuse, NFC-type
OS63F22N1	1SCA022471R0740	19	Switch fuse, NFC-type
OS63FS30	1SCA022471R0910	27	Switch fuse, NFC-type
OS63FS40F	1SCA022472R0970	27	Switch fuse, NFC-type
OS63FS40N1	1SCA022471R9530	27	Switch fuse, NFC-type
OS800B03K	1SCA108713R1001	18	Switch fuse, BS-type
OS800B03N3P	1SCA100861R1001	17	Switch fuse, BS-type
OS800B03P	1SCA022825R7550	17	Switch fuse, BS-type
OS800B04N2K	1SCA108714R1001	18	Switch fuse, BS-type
OS800B04N2P	1SCA022825R8010	17	Switch fuse, BS-type
OS800B12P	1SCA022825R8280	17	Switch fuse, BS-type
OS800B22N2P	1SCA022825R8440	17	Switch fuse, BS-type
OS800BS03	1SCA108076R1001	26	Switch fuse, BS-type
OS800BS03K	1SCA108077R1001	26	Switch fuse, BS-type
OS800BS04N2	1SCA108081R1001	26	Switch fuse, BS-type
OS800BS04N2K	1SCA108082R1001	26	Switch fuse, BS-type
OS800BS30	1SCA108083R1001	26	Switch fuse, BS-type
OS800BS30K	1SCA108084R1001	26	Switch fuse, BS-type
OS800BS40N2	1SCA108086R1001	26	Switch fuse, BS-type

Type	Order number	Page	Description
OS800BS40N2K	1SCA108087R1001	26	Switch fuse, BS-type
OS800D03K	1SCA108725R1001	14	Switch fuse, DIN-type
OS800D03N3P	1SCA100859R1001	13	Switch fuse, DIN-type
OS800D03P	1SCA022825R4880	13	Switch fuse, DIN-type
OS800D04FP	1SCA022825R5000	13	Switch fuse, DIN-type
OS800D04N2K	1SCA108722R1001	14	Switch fuse, DIN-type
OS800D04N2P	1SCA022825R5180	13	Switch fuse, DIN-type
OS800D12P	1SCA022825R5340	13	Switch fuse, DIN-type
OS800D22N2P	1SCA022825R5510	13	Switch fuse, DIN-type
OS800DS03	1SCA108092R1001	24	Switch fuse, DIN-type
OS800DS03K	1SCA108093R1001	24	Switch fuse, DIN-type
OS800DS04F	1SCA108094R1001	24	Switch fuse, DIN-type
OS800DS04FK	1SCA108095R1001	24	Switch fuse, DIN-type
OS800DS30	1SCA108098R1001	24	Switch fuse, DIN-type
OS800DS30K	1SCA108093R1001	24	Switch fuse, DIN-type
OS800DS40F	1SCA108100R1001	24	Switch fuse, DIN-type
OS800DS40FK	1SCA108101R1001	24	Switch fuse, DIN-type
OS800L03P	1SCA022825R9920	21	Switch fuse, UL- and SCA-type
OSD160P4	1SCA022502R8410	45	Blown fuse indicator
OSD25P3	1SCA022192R9060	45	Blown fuse indicator
OSD25P4	1SCA022196R9520	45	Blown fuse indicator
OSD63P3	1SCA022502R8590	45	Blown fuse indicator
OSD63P4	1SCA022502R8670	45	Blown fuse indicator
OSN 160	1SCA022560R2390	38	Neutral link
OSN 160W	1SCA022561R0810	38	Neutral link
OSP1250B	1SCA107950R1001	38	Four pole
OSP1250D	1SCA107946R1001	38	Four pole
OSP1250N	1SCA107943R1001	38	Four pole
OSP200B	1SCA022735R9180	38	Four pole
OSP200D	1SCA022735R8960	38	Four pole
OSP200N	1SCA022735R8700	38	Four pole
OSP250B	1SCA022770R4030	38	Four pole
OSP250D	1SCA022735R9340	38	Four pole
OSP250N	1SCA022735R9260	38	Four pole
OSP400B	1SCA022770R3140	38	Four pole
OSP400D	1SCA022770R3220	38	Four pole
OSP400N	1SCA022770R3490	38	Four pole
OSP4B	1SCA022472R7980	38	Four pole
OSP4C	1SCA022472R8010	38	Four pole
OSP4D	1SCA022472R7630	38	Four pole
OSP4F14	1SCA022472R8280	38	Four pole
OSP4F22	1SCA022472R8360	38	Four pole
OSP4J	1SCA022472R8100	38	Four pole
OSP4N	1SCA022472R7710	38	Four pole
OSP800B	1SCA100434R1001	38	Four pole
OSP800D	1SCA100433R1001	38	Four pole
OSP800N	1SCA100432R1001	38	Four pole
OSS1250G1L/3	1SCA107938R1001	40	Terminal shroud
OSS1250G1L/4	1SCA107940R1001	40	Terminal shroud
OSS1250G1S/3	1SCA107939R1001	40	Terminal shroud
OSS1250G1S/4	1SCA107941R1001	40	Terminal shroud
OSS160G3	1SCA022556R1420	40	Terminal shroud
OSS160T1	1SCA022502R8830	40	Terminal shroud

Index

Type	Order number	Page	Description
OSS160T1L	1SCA022556R1260	40	Terminal shroud
OSS200G1L/3	1SCA022731R8910	40	Terminal shroud
OSS200G1L/4	1SCA022731R9040	40	Terminal shroud
OSS200G1S/3	1SCA022732R0130	40	Terminal shroud
OSS200G1S/4	1SCA022732R0050	40	Terminal shroud
OSS250G1L	1SCA022727R5080	40	Terminal shroud
OSS250G1L/3	1SCA022731R9390	40	Terminal shroud
OSS250G1L/4	1SCA022731R9470	40	Terminal shroud
OSS250G1S	1SCA022727R4940	40	Terminal shroud
OSS250G1S/3	1SCA022731R9550	40	Terminal shroud
OSS250G1S/4	1SCA022731R9630	40	Terminal shroud
OSS400G1L/3	1SCA022776R6650	40	Terminal shroud
OSS400G1L/4	1SCA022776R6730	40	Terminal shroud
OSS400G1S/3	1SCA022776R6900	40	Terminal shroud
OSS400G1S/4	1SCA022776R7030	40	Terminal shroud
OSS63B1	1SCA022645R8460	40	Protection plug
OSS63G1	1SCA022533R6730	40	Terminal shroud
OSS800G1L/3	1SCA022776R7200	40	Terminal shroud
OSS800G1L/4	1SCA022776R7380	40	Terminal shroud
OSS800G1S/3	1SCA022776R7540	40	Terminal shroud
OSS800G1S/4	1SCA022776R7460	40	Terminal shroud
OSV1250DK	1SCA107797R1001	33	Optional handle
OSV200BK	1SCA022779R7530	33	Optional handle
OSV250DK	1SCA022763R3510	33	Optional handle
OSV400BK	1SCA022763R3930	33	Optional handle
OSV400DK	1SCA022763R4230	33	Optional handle
OSV800DK	1SCA107794R1001	33	Optional handle
OSVY1250DK	1SCA108702R1001	33	Optional handle
OSVY200BK	1SCA022779R7700	33	Optional handle
OSVY250DK	1SCA022778R6500	33	Optional handle
OSVY400BK	1SCA022779R5830	33	Optional handle
OSVY400DK	1SCA022779R5590	33	Optional handle
OSVY800DK	1SCA108703R1001	33	Optional handle
OSZ1	1SCA022481R3710	38	Neutral link
OSZ2	1SCA022481R3800	38	Neutral link
OSZ4	1SCA022530R0200	36	Auxiliary contact
OSZ4	1SCA022530R0200	45	Fuse monitor
OSZ6	1SCA022637R6220	40	Legend plate
OSZA15	1SCA022509R0120	41	Connecting accessorie
OSZT1A	1SCA106532R1001	46	Mechanism interlock kit & Electrical interlock
OSZT1L	1SCA106538R1001	46	Mechanism interlock kit & Electrical interlock
OSZT2A	1SCA106534R1001	46	Mechanism interlock kit & Electrical interlock
OSZT2L	1SCA106539R1001	46	Mechanism interlock kit & Electrical interlock
OSZT3A	1SCA106535R1001	46	Mechanism interlock kit & Electrical interlock
OSZT3L	1SCA106540R1001	46	Mechanism interlock kit & Electrical interlock
OSZT3L	1SCA106540R1001	46	Coil
OSZT4A	1SCA106536R1001	46	Mechanism interlock kit & Electrical interlock
OSZT4L	1SCA106541R1001	46	Mechanism interlock kit & Electrical interlock
OSZT4L	1SCA106541R1001	46	Coil
OSZX3	1SCA101224R1001	45	Blown fuse indicator
OSZX4	1SCA101225R1001	45	Blown fuse indicator
OTS1600G1L	1SCA106134R1001	40	Terminal shroud
OTS1600G1S	1SCA102667R1001	40	Terminal shroud
OTS250G1L	1SCA022715R5340	40	Terminal shroud
OTS250G1S	1SCA022715R5260	40	Terminal shroud
OTS800G1L	1SCA022776R7710	40	Terminal shroud
OTS800G1S	1SCA022776R8010	40	Terminal shroud
OTZW25	1SCA022778R6920	43	Conversion kit
OTZW26	1SCA022778R7060	43	Conversion kit
OWC5DSH1	1SCA022190R9620	43	Conversion kit
OWC5DSH2	1SCA022208R4460	43	Conversion kit
OWC6DSH1	1SCA105251R1001	43	Conversion kit
OWC6DSH2	1SCA105252R1001	43	Conversion kit
OWM5DS1	1SCA022191R0040	43	Conversion kit
OWM5DS2	1SCA022208R4620	43	Conversion kit
OWM6DS1	1SCA105253R1001	43	Conversion kit
OWM6DS2	1SCA105254R1001	43	Conversion kit
OWP5DS1	1SCA022190R9890	43	Conversion kit
OWP5DS2	1SCA022208R4200	43	Conversion kit
OWP6DS1	1SCA105255R1001	43	Conversion kit
OWP6DS2	1SCA105256R1001	43	Conversion kit
OXN1250S	1SCA104163R1001	38	Neutral link
OXN250	1SCA022752R9950	38	Neutral link
OXN400	1SCA022770R3060	38	Neutral link
OXN800S	1SCA022831R4880	38	Neutral link
OXP12X250	1SCA022325R6980	35	Extended shaft and shaft accessorie
OXP12X280	1SCA022137R5140	35	Extended shaft and shaft accessorie
OXP12X280	1SCA022137R5140	35	Extended shaft and shaft accessorie
OXP12X280-45	1SCA022382R0800	35	Extended shaft and shaft accessorie
OXP12X325	1SCA022042R5810	35	Extended shaft and shaft accessorie
OXP12X325	1SCA022042R5810	35	Extended shaft and shaft accessorie
OXP12X325-45	1SCA022304R4450	35	Extended shaft and shaft accessorie
OXP12X395	1SCA022042R5990	35	Extended shaft and shaft accessorie
OXP12X395	1SCA022042R5990	35	Extended shaft and shaft accessorie
OXP12X395	1SCA022042R5990	35	Extended shaft and shaft accessorie
OXP12X465	1SCA022042R6020	35	Extended shaft and shaft accessorie
OXP12X465	1SCA022042R6020	35	Extended shaft and shaft accessorie
OXP12X465	1SCA022042R6020	35	Extended shaft and shaft accessorie
OXP12X535	1SCA022042R6110	35	Extended shaft and shaft accessorie
OXP12X535	1SCA022042R6110	35	Extended shaft and shaft accessorie

Index

Type	Order number	Page	Description
OXP12X535	1SCA022042R6110	35	Extended shaft and shaft accessorie
OXP6X150	1SCA022295R5600	34	Extended shaft
OXP6X150	1SCA022295R5600	34	Extended shaft
OXP6X150	1SCA022295R5600	34	Extended shaft
OXP6X150	1SCA022295R5600	34	Extended shaft
OXP6X150-45	1SCA022294R4400	34	Extended shaft
OXP6X150-45	1SCA022294R4400	34	Extended shaft
OXP6X161	1SCA022067R1760	34	Extended shaft
OXP6X161	1SCA022067R1760	34	Extended shaft
OXP6X161	1SCA022067R1760	34	Extended shaft
OXP6X161	1SCA022067R1760	34	Extended shaft
OXP6X170	1SCA108224R1001	34	Extended shaft
OXP6X170	1SCA108224R1001	34	Extended shaft
OXP6X170-45	1SCA108227R1001	34	Extended shaft
OXP6X170-45	1SCA108227R1001	34	Extended shaft
OXP6X210	1SCA022295R6080	34	Extended shaft
OXP6X210	1SCA022295R6080	34	Extended shaft
OXP6X210	1SCA022295R6080	34	Extended shaft
OXP6X210	1SCA022295R6080	34	Extended shaft
OXP6X210-45	1SCA022294R4230	34	Extended shaft
OXP6X210-45	1SCA022294R4230	34	Extended shaft
OXP6X265	1SCA108225R1001	34	Extended shaft
OXP6X265	1SCA108225R1001	34	Extended shaft
OXP6X265-45	1SCA108228R1001	34	Extended shaft
OXP6X265-45	1SCA108228R1001	34	Extended shaft
OXP6X290	1SCA022042R6370	34	Extended shaft
OXP6X290	1SCA022042R6370	34	Extended shaft
OXP6X290	1SCA022042R6370	34	Extended shaft
OXP6X290	1SCA022042R6370	34	Extended shaft
OXP6X290-45	1SCA022304R4290	34	Extended shaft
OXP6X290-45	1SCA022304R4290	34	Extended shaft
OXP6X360	1SCA022042R6530	34	Extended shaft
OXP6X360	1SCA022042R6530	34	Extended shaft
OXP6X360-45	1SCA022341R4640	34	Extended shaft
OXP6X360-45	1SCA022341R4640	34	Extended shaft
OXP6X400	1SCA108226R1001	34	Extended shaft
OXP6X400	1SCA108226R1001	34	Extended shaft
OXP6X400-45	1SCA108229R1001	34	Extended shaft
OXP6X400-45	1SCA108229R1001	34	Extended shaft
OXP6X430	1SCA022056R6030	34	Extended shaft
OXP6X430	1SCA022056R6030	34	Extended shaft
OZXA11	1SCA022025R6940	42	Terminal clamp set
OZXA14	1SCA022008R7810	42	Terminal clamp set
OZXA16	1SCA022024R4340	41	Connecting accessorie
OZXA7	1SCA022052R2760	41	Connecting accessorie
OZXB 1L	1SCA022169R2030	42	Terminal clamp set
OZXB 1L/1	1SCA022194R0030	42	Terminal clamp set
OZXB 2	1SCA022119R7610	42	Terminal clamp set
OZXB 2/1	1SCA022194R0200	42	Terminal clamp set
OZXB 2L	1SCA022158R7750	42	Terminal clamp set
OZXB 2L	1SCA022158R7750	42	Terminal clamp set

Type	Order number	Page	Description
OZXB 2L/1	1SCA022194R0460	42	Terminal clamp set
OZXB 2L/1	1SCA022194R0460	42	Terminal clamp set
OZXB 3	1SCA022136R8100	42	Terminal clamp set
OZXB 3/1	1SCA022194R0620	42	Terminal clamp set
OZXB 4	1SCA022137R4760	42	Terminal clamp set
OZXB 4/1	1SCA022194R0890	42	Terminal clamp set
OZXB 5	1SCA022137R2470	42	Terminal clamp set
OZXB 5/1	1SCA022194R1010	42	Terminal clamp set
OZXB 7L	1SCA022185R7130	42	Terminal clamp set
OZXB1	1SCA022169R2030	41	Connecting accessorie
OZXB2	1SCA022119R7610	41	Connecting accessorie
OZXB2K	1SCA022264R0010	40	Terminal shroud
OZXB2L	1SCA022158R7750	42	Terminal clamp set
OZXB2L/1	1SCA022194R0460	42	Terminal clamp set
OZXB3	1SCA022136R8100	42	Terminal clamp set
OZXB3	1SCA022136R8100	42	Terminal clamp set
OZXB3	1SCA022136R8100	42	Terminal clamp set
OZXB3/1	1SCA022194R0620	42	Terminal clamp set
OZXB3/1	1SCA022194R0620	42	Terminal clamp set
OZXB3/1	1SCA022194R0620	42	Terminal clamp set
OZXB3K	1SCA022264R0440	40	Terminal shroud
OZXB4	1SCA022137R4760	42	Terminal clamp set
OZXB4	1SCA022137R4760	42	Terminal clamp set
OZXB4	1SCA022137R4760	42	Terminal clamp set
OZXB4/1	1SCA022194R0890	42	Terminal clamp set
OZXB4/1	1SCA022194R0890	42	Terminal clamp set
OZXB4/1	1SCA022194R0890	42	Terminal clamp set
OZXB4K	1SCA022199R2850	40	Terminal shroud
OZXB5	1SCA022137R2470	42	Terminal clamp set
OZXB5	1SCA022137R2470	42	Terminal clamp set
OZXB5	1SCA022137R2470	42	Terminal clamp set
OZXB5/1	1SCA022194R1010	42	Terminal clamp set
OZXB5/1	1SCA022194R1010	42	Terminal clamp set
OZXB5/1	1SCA022194R1010	42	Terminal clamp set
OZXB5K	1SCA022283R8040	40	Terminal shroud
OZXB6	1SCA022137R4920	42	Terminal clamp set
OZXB6	1SCA022137R4920	42	Terminal clamp set
OZXB6	1SCA022137R4920	42	Terminal clamp set
OZXB6/1	1SCA022194R1270	42	Terminal clamp set
OZXB6/1	1SCA022194R1270	42	Terminal clamp set
OZXB6/1	1SCA022194R1270	42	Terminal clamp set
OZXB7	1SCA022185R0040	42	Terminal clamp set
OZXB7/1	1SCA022194R1430	42	Terminal clamp set
OZXB7L	1SCA022185R7130	42	Terminal clamp set
OZXB7L	1SCA022185R7130	42	Terminal clamp set
OZXB7L/1	1SCA022194R1600	42	Terminal clamp set
OZXB7L/1	1SCA022194R1600	42	Terminal clamp set
OZXB7L/1	1SCA022194R1600	42	Terminal clamp set
OZXB8	1SCA022744R1510	42	Terminal clamp set
OZXB8	1SCA022744R1510	42	Terminal clamp set
OZXB8	1SCA022744R1510	42	Terminal clamp set

Index

Type	Order number	Page	Description
OZXB8	1SCA022744R1510	42	Terminal clamp set
OZXB8	1SCA022744R1510	42	Terminal clamp set
OZXB8/1	1SCA022744R1600	42	Terminal clamp set
OZXB8/1	1SCA022744R1600	42	Terminal clamp set
OZXB8/1	1SCA022744R1600	42	Terminal clamp set
OZXB8/1	1SCA022744R1600	42	Terminal clamp set
OZXB8/1	1SCA022744R1600	42	Terminal clamp set
OZXB9	1SCA022750R3210	42	Terminal clamp set
OZXB9	1SCA022750R3210	42	Terminal clamp set
OZXB9	1SCA022750R3210	42	Terminal clamp set
OZXB9	1SCA022750R3210	42	Terminal clamp set
OZXB9	1SCA022750R3210	42	Terminal clamp set
OZXB9/1	1SCA022750R3300	42	Terminal clamp set
OZXB9/1	1SCA022750R3300	42	Terminal clamp set
OZXB9/1	1SCA022750R3300	42	Terminal clamp set
OZXB9/1	1SCA022750R3300	42	Terminal clamp set
OZXB9/1	1SCA022750R3300	42	Terminal clamp set
PDAL2/110AC50Hz	1SCA106543R1001	46	Coil
PDAL2/110AC60Hz	1SCA107100R1001	46	Coil
PDAL2/110DC	1SCA107105R1001	46	Coil
PDAL2/120AC60HZ	1SCA111353R1001	46	Mechanism interlock kit & Electrical interlock
PDAL2/208AC60Hz	1SCA107101R1001	46	Coil
PDAL2/230AC50Hz	1SCA107102R1001	46	Coil
PDAL2/240AC60HZ	1SCA111356R1001	46	Coil
PDAL2/24AC60HZ	1SCA111350R1001	46	Mechanism interlock kit & Electrical interlock
PDAL2/24DC	1SCA106542R1001	46	Coil
PDAL2/48DC	1SCA107103R1001	46	Coil
PDAL2/60DC	1SCA107104R1001	46	Coil
YASDA 21	1SCA022098R9420	32	Optional handle
YASDA 6	1SCA022071R2890	32	Optional handle
YASDA 7	1SCA022071R3010	32	Optional handle
YASDA 8	1SCA022071R3270	32	Optional handle
YASDA35	1SCA104400R1001	32	Optional handle

Notes

Notes

Printed by: Waasa Graphics Oy, Vaasa Finland
Producted by: Citec Information Oy, Vaasa Finland

ABB Oy
Low Voltage Products
P.O. Box 622
FI-65101 VAASA, Finland
Telephone +358 10 22 11
Telefax +358 10 22 45708
www.abb.com

The technical data and dimensions are valid at the time of printing. We reserve the right to subsequent alterations.

The operations of the manufacturing plant have been certified.



OS1GB 09-03
1SCC311013C0201