BOS 23K-XI-RS11-S4
BOS01UT

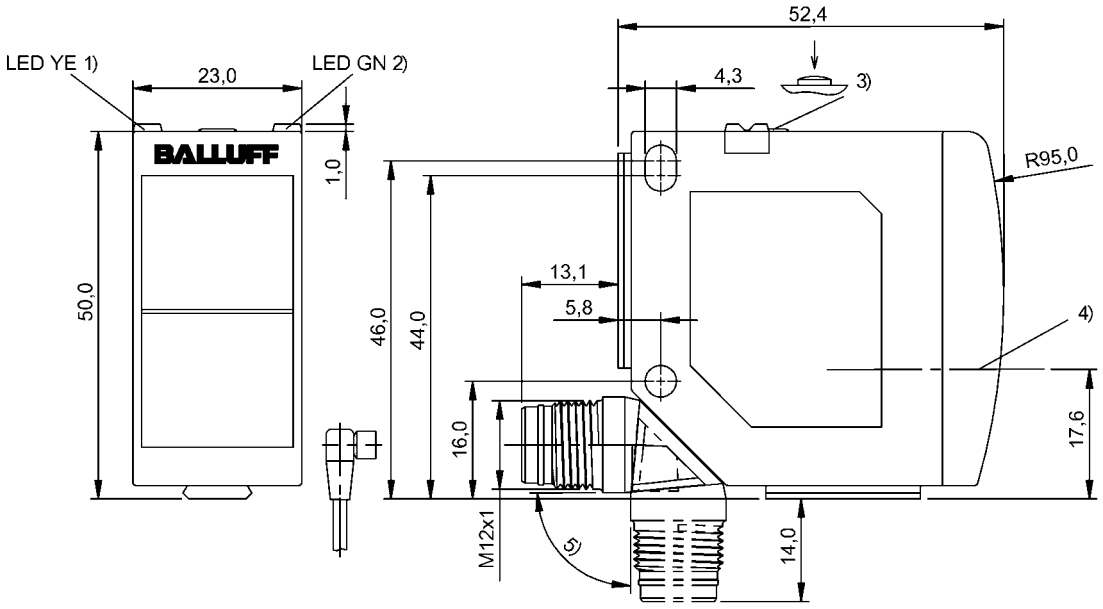

1) Alignment mode active 2) Power/alignment mode active 3) Alignment mode on/off 4) Optical axis 5) rotatable 270°

LISTED IND. CONT. EQ. 77HA for use in the secondary of a class 2 source of supply

Display/Operation

Adjuster	Key (1x)
Setting	Alignment mode on/off

Electrical connection

Connection	M12x1-Connector, 4-pole, A-coded
Polarity reversal protected	yes

Electrical data

Baud rate	38.4 kBaud
MTTF (40 °C)	494 a
No-load current Io max. at Ue	30 mA
Operating voltage Ub	18…30 VDC
Protected against miswiring	yes
Rated operating voltage Ue DC	24 V

Environmental conditions

Ambient temperature	-20…60 °C
IP rating per DIN 40050	IPx9K
Protection type IEC 60529	IP6x

Functional safety

Diagnostic coverage	0.0 %
Functional safety	no
Mission Time	10 a

General data

Approval/Conformity	CE cULus Ecolab
Basic standard	IEC 60947-5-2
Reference receiver	BOS 23K-GI-RE10-S4
Series	23K
Style	Square Connection can be rotated

Material

Housing material	PC ABS
Material sensing surface	PMMA

BOS 23K-XI-RS11-S4
BOS01UT

Mechanical data

Dimension	23 x 51 x 52.4 mm
Fastening detail	Screw M4
Tightening torque max.	1.5 Nm

Optical data

Beam characteristic	Divergent
LED group per IEC 62471	Exempt Group
Light type	LED Red light
Principle of optical operation	Through-beam sensor (Emitter)
Wave length	640 nm

Output/Interface

Input function	Test (Emitter off)
Interface	IO-Link
Process data cycle min.	5 ms

Range/Distance

Measuring range	0…20 m
Range	0…20 m
Rated operating distance Sn	20 m, Adjustable
Ripple max. (% of Ue)	10 %

Remarks

Do not press key using a pointed tool.
Order accessories separately.
For additional information, refer to user's guide.

For further information on MTTF/B10d, please refer to the MTTF / B10d Certificate.

Specification of the MTTF value and the B10d value do not represent any binding quality and/or life expectancy guarantees.

Connector view

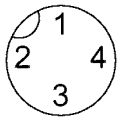

Wiring Diagram

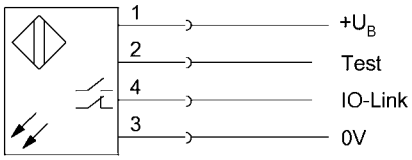

Symbols for Optoelectronic Sensors

