25000N series

Professional slide switches

Distinctive features and specifications

UG1410A





- ❑ **Professional grade slide switches for PC boards**
- ❑ **Approved according to UL 1054**
- ❑ **Wave solderable**
  Not washable in aqueous process
- ❑ **Available with flush, high and side actuator**
- ❑ **Various actuator lengths**

ELECTRICAL SPECIFICATIONS

- Max. current/voltage rating with resistive load :
  - silver contacts (A) : 1A 30VDC
  - gold plated brass contacts (LD) : 100mA 30VDC
- Minimum load :
  - silver contacts (A) : 100mA 10V
  - gold plated brass contacts (LD) : 10µA 5VDC - 10mA 50mV
- Initial contact resistance :
  - silver contacts (A) : 10mΩ max.
  - gold plated brass contacts (LD) : 50mΩ max.
- Insulation resistance : 1.000 MΩ min. at 500VDC
- Dielectric strength :
  1.000 Vrms 50 Hz min. between terminals
  2.000 Vrms 50 Hz min. between poles
  2.000 Vrms 50 Hz min. between terminals and frame
- Electrical life : 10.000 cycles at full load
- Low level or mechanical life : 20.000 cycles

MATERIALS

- Case : PBT
- Actuator : polyamide, glass filled
- Cover : polyamide, glass filled
- Contacts
  A : silver
  LD : brass, gold plated
- Terminal seal : epoxy

APPROVALS

2A 250VAC
4A 125VAC

Availability : consult factory for details of approved models.

Marking : To order switches marked UL, complete the "Options and Approvals" box of ordering format.

GENERAL SPECIFICATIONS

- Operating temperature :
  -40°C to +85°C
- Overall length : 14 mm (.551)
- Actuator height (outside case) :
  - high : 2,80 mm (.110)
  - extra high : 6 mm (.236)
  - side : 2,3 mm (.090)
  - long side : 6 mm (.236)
- Travel : 4 mm (.157)

The company reserves the right to change specifications without notice.

25000N series

Professional slide switches

Overview

MODEL STRUCTURE

25	□	□	□	N

SERIES

Actuator and terminals

1	Flush or high actuator, terminal spacing 2,54 (.100)
4	Flush or high actuator, terminal spacing 5,08 (.200)
3	Side actuator, terminal spacing 2,54 (.100)
5	Side actuator, terminal spacing 5,08 (.200)

Number of poles

3	Single pole
4	Double pole

Electrical functions

6	ON	-	ON
9	ON	OFF	ON

Version

N
For all models

OPTIONS

Contact materials

A	Silver
LD	Gold plated brass

Actuator

B	Flush
H	High
H6	Extra high
Blank	Side
-6	Long side

Options and approvals

X601	Special contact : lower rating

Other : see following pages.

E

ABOUT THIS SERIES
On the following pages, you will find successively :
- model structure of switches (including actuator options)
- contact options

Dimensions : first dimensions are in mm while inches are shown as bracketed numbers.

NOTICE : please note that not all combinations of above numbers are available.
Refer to the following pages for further information.

Packaging unit : single pole : 100 pieces - double pole : 50 pieces

25000N series

Professional slide switches

MODEL STRUCTURE

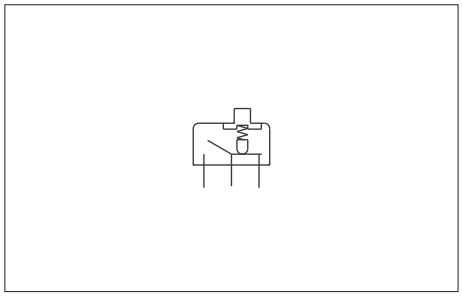

- Epoxy sealed terminals standard
- 1 and 2 pole configurations
- **UL approved models** : see next page.

MODEL STRUCTURE

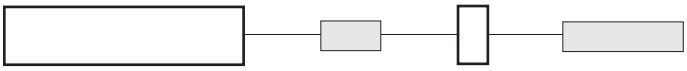

Flush actuator : 25000NB

Shown with 2,54 mm terminal spacing



Terminal spacing 2,54 (.100)	Terminal spacing 5,08 (.200)
Single pole	Single pole
25136N B	**25436N B**
25139N B	**25439N B**
Double pole	Double pole
25146N B	**25446N B**
25149N B	**25449N B**

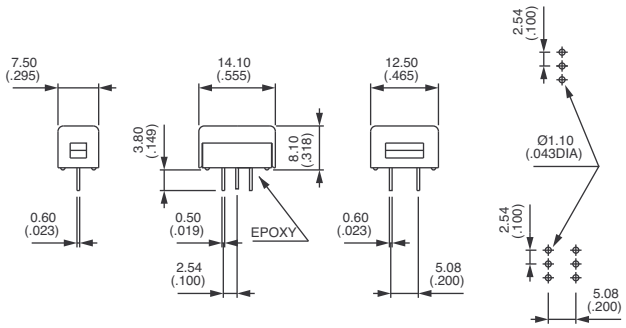

High actuator : 25000NH

Shown with 5,08 mm terminal spacing



Terminal spacing 2,54 (.100)	Terminal spacing 5,08 (.200)
Single pole	Single pole
25136N H	**25436N H**
25139N H	**25439N H**
Double pole	Double pole
25146N H	**25446N H**
25149N H	**25449N H**

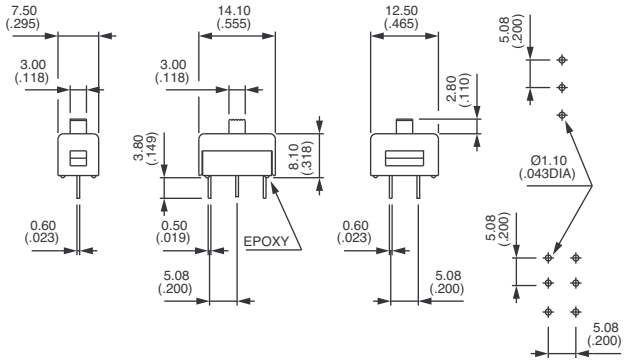

Extra high actuator : 25000NH6

Shown with 5,08 mm terminal spacing



Terminal spacing 2,54 (.100)	Terminal spacing 5,08 (.200)
Single pole	Single pole
25136N H6	**25436N H6**
25139N H6	**25439N H6**
Double pole	Double pole
25146N H6	**25446N H6**
25149N H6	**25449N H6**

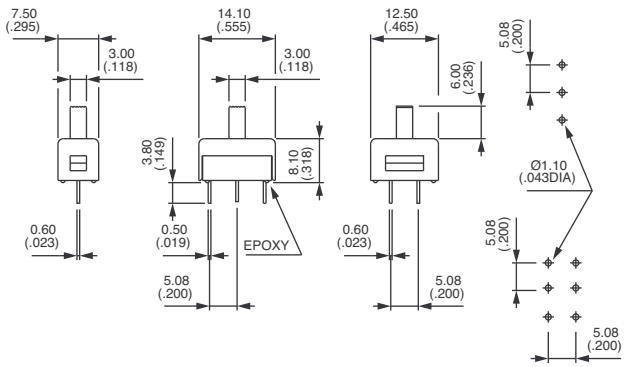

E

25000N series

Professional slide switches

Side actuator : 25000N



Shown with 2,54 mm terminal spacing

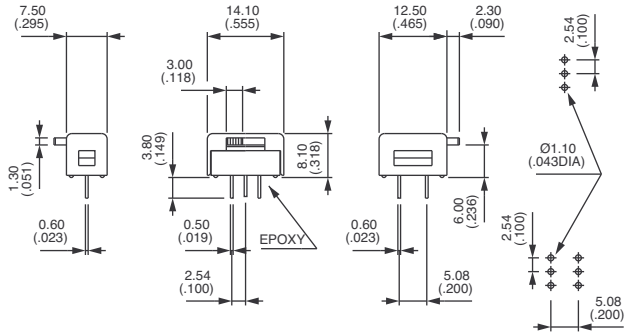

Terminal spacing 2,54 (.100)	Terminal spacing 5,08 (.200)
Single pole	Single pole
25336N	**25536N**
25339N	**25539N**
Double pole	Double pole
25346N	**25546N**
25349N	**25549N**

Long side actuator : 25000N-6



Shown with 2,54 mm terminal spacing

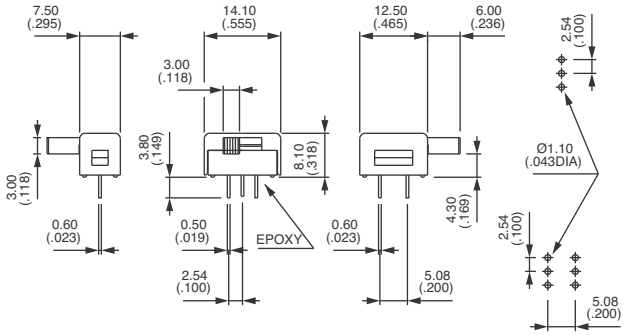

Terminal spacing 2,54 (.100)	Terminal spacing 5,08 (.200)
Single pole	Single pole
25336N -6	**25536N -6**
25339N -6	**25539N -6**
Double pole	Double pole
25346N -6	**25546N -6**
25349N -6	**25549N -6**

PCB MOUNTING

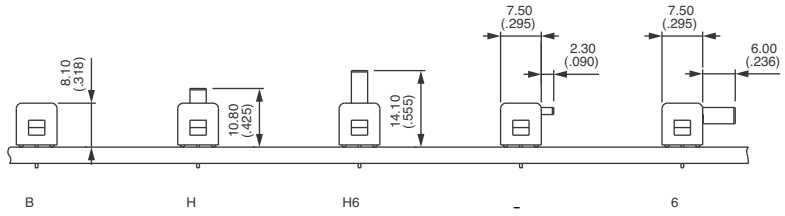

POSITIONS AND CONNECTIONS

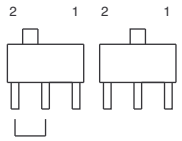

Function 6	ON	-	ON
Function 9	ON	OFF	ON

CONTACT MATERIALS

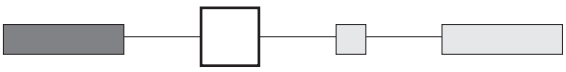

A	Silver
LD	Brass, gold plated

OPTIONS AND APPROVALS

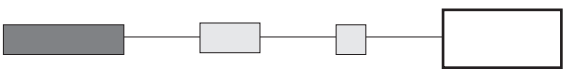

X601	Silver plated brass contacts - Lower rating 3VA 30VDC. Min quantity : 5.000 pieces per model and shipment.
X693	Flame retardant plastic materials
X693UL	Switches approved and marked UL (silver contacts only)