Traditional T-Series Wall Fan

- Extract/intake model in 4 sizes: 6", 7", 9" and 12"
- Patented electronic shutter system ensures quiet, trouble free operation
- For the very best from your fan use the Ecotronic controller
- Easy fit connector Top Socket, standard on all models



UK's No. 1 Commercial Fan

Behind the grille of the Vent-Axia T-Series Wall model is a range of high performance extract/intake fans designed to fit through most wall thicknesses using telescopic liners supplied.

T-Series also features a unique speed control pack which enables high, medium or low speed to be preset to suit room size or required duty.

T-Series controllers may be used with this model to obtain a choice of speeds, reversible airflow direction and automatic sensor operation. The Vent-Axia Ecotronic controller gives even greater running economy with its minimum speed setting and 'E' mode.

Top Socket

A connector Top Socket is standard on all T-Series fans. Allowing fast and trouble-free mains connection.

Shutter

TX models are supplied complete with an integral instantaneous automatic louvre shutter which will operate on both intake and extract and at any angle of mounting.

When the fan is used with a T-Series or Ecotronic controller, the shutter can be set open with the fan motor switched off to provide natural ventilation without the security risk of an open window.

Electrical

Motor purpose-designed. Suitable for running at any angle. Quiet running, enclosed. Suitable for operation in ambient temperatures from -40°C to +50°C.

Fitted with Standard Thermal Overload Protection (S.T.O.P.).

Supply voltage 220-240V/1/50Hz.

Wall Kits

Designed to fit into most double brick walls using the telescopic liners, supplied. Additional liners are available to accommodate exceptionally thick brick walls.

Models

Complete Fan

Model	Stock Ref
TX6WL	W161510
TX7WL	W162510
TX9WL	W163510
TX12WL	W164510

Fan Core (excludes Fitting Kit)

Size	Stock Ref
TX6	472012
TX7	472013
TX9	472014
TX12	472015

Wall Kits (excludes Fan Core)

Size	Stock Ref
TX6	472016
TX7	472017
TX9	472018
TX12	472019

Accessories

Additional Wall Liner Section

Size	Stock Ref
TX6	460094
TX7	460095
TX9	460096
TX12	460086

Controllers



Ecotronic Controller Surface Mounting
Stock Ref
W362320



T-Series Controller Surface Mounting
Stock Ref
W361119

Dimensions (mm)

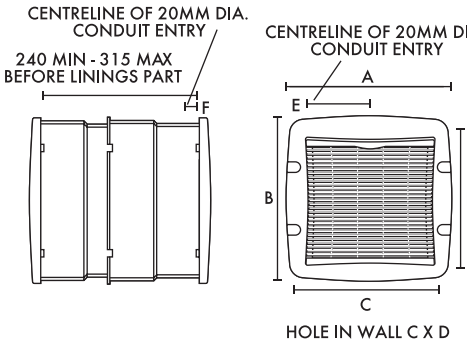

Size Dim.	6 in	7 in	9 in	12 in
A	310	352	391	470
B	303	345	388	467
C	290	330	365	442
D	290	330	375	450
E	104	124	143	182
F	25	25	25	25
Weight kg	5.54	6.13	7.77	10.86

*Complete product.

Performance Guide

	Extract performance m^3/h (l/s)			Watts	Sound dB(A)	Amps
Model	low	medium	high	(high)	(med) @ 3m	@ 240V
TX6 Wall	270 (75)	350 (97)	395 (110)	40	43	0.24
TX7 Wall	335 (93)	435 (120)	530 (147)	40	39	0.24
TX9 Wall	515 (143)	755 (210)	870 (241)	85	43	0.42
TX12 Wall	1185 (329)	1530 (425)	1745 (485)	105	49	0.51