FILTER FAN PLUS

FPI/FPO 018 | up to 263 m³/h (176 x 176 mm)



- > New air-flap outlet technology for high airflow
- > Easy mounting
- > Protection type test/Environmental rating by independent testing institutes (VDE and UL)
- > Two systems for optimal airflow (FPI/FPO)
- > Standard enclosure cut-out sizes (5 sizes)
- > One filter mat

Filter fans are used to provide an optimum climate in enclosures and cabinets with electrical/electronic components. The interior temperature of an enclosure can be reduced by channelling cooler filtered outside air into the enclosure thus expelling heated internal air. The resulting airflow prevents formation of localised hot pockets in installations and protects electronic components from overheating.

The Filter Fan Plus series uses a new air-flap outlet technology for the air outlet and thus reaches a high degree of airflow. A ratchet mechanism is used for mounting and provides high stability and tightness. Depending on the application there are two systems that are available – the FPI or FPO system. The FPI system is a standard installation with a filter fan in the lower part of the enclosure which ensures that fresh air is fed into the enclosure (airflow direction "In"). This system consists of a filter fan and exit filter. Whereas in the FPO system, the filter fan is located in the upper area of the enclosure to avoid heat buildups (airflow direction "Out"). The FPO system is composed of an intake filter and exit filter fan. The Filter Fan Plus series has been designed for indoor use.

TECHNICAL DATA

Axial fan, ball bearing	service life L10 at +40 °C (+104 °F): min. 65,000 h fan body aluminium, rotor metal
Connection	3-pole clamp for 2.5 mm², clamping torque 0.8 Nm max.
Casing, hood, flaps	plastic according to UL94 V-0, light grey; UV light resistant according to UL746C (f1)
Enclosure cut-out	176 x 176 $^{+1}$ mm
Mounting frame	4 built-in ratchet braces for mounting (6 notches for wall thickness 1 – 4 mm). Additional use of screws possible if needed[1].
Filter mat	G3 acc. to DIN EN 779, average arrestance A_g 84 %
Filter material	synthetic fibre with progressive construction, temperature resistant to +100 °C, self-extinguishing class F1, moisture resistant to 100 % RH, reusable
Operating temperature	50 Hz: -25 to +50 °C (-13 to +122 °F) 60 Hz: -25 to +70 °C (-13 to +158 °F)
Storage temperature	-40 to +70 °C (-40 to +158 °F)
Operating/Storage humidity	max. 90 % RH (non-condensing)
Protection type/Protection class	IP54 / I (earthed)
Environmental rating UL/NEMA	UL TYPE 12 / NEMA 12
Approvals	VDE, UL File No. E234324, EAC
Note	other voltages on request

[1] Drilling marks for screw mounting are indicated on mounting frame.

SYSTEM FPI

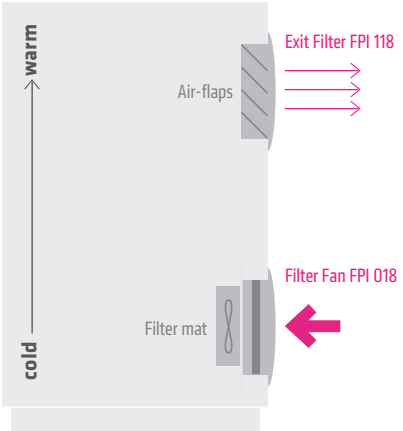

AIRFLOW DIRECTION "IN": FILTER FAN FPI 018

Art. No.	Operating voltage	Air volume, free flow	Air volume with exit filter	Current consumption (50/60 Hz)	Power consumption	Average noise level (DIN EN ISO 4871)	Depth in enclosure	Weight (approx.)	Filter mat
01872.0-30	AC 230 V, 50/60 Hz	170 m³/h	139 m³/h	310/250 mA	45 W	55 db (A)	117 mm	1.6 kg	G3
01872.9-30	AC 115 V, 50/60 Hz	204 m³/h	187 m³/h	560/470 mA	38 W	58 db (A)	117 mm	1.6 kg	G3

AIRFLOW DIRECTION "IN": EXIT FILTER FPI 118

Art. No.	Depth in enclosure	Weight (approx.)	Air outlet
11872.0-00	43 mm	0.4 kg	air-flap outlet technology

www.stego.de | www.stego.co.uk | www.stegonorden.se

04.04.2017 | Specifications are subject to change without notice. Errors and omissions excepted. Suitability of this product for its intended use and any associated risks must be determined by the end customer/buyer in its final application.

SYSTEM FPO

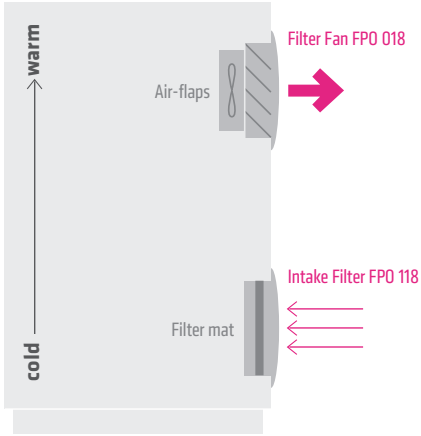

AIRFLOW DIRECTION "OUT": FILTER FAN FPO 018

Art. No.	Operating voltage	Air volume, free flow	Air volume with intake filter	Current consumption (50/60 Hz)	Power consumption	Average noise level (DIN EN ISO 4871)	Depth in enclosure	Weight (approx.)	Air outlet
01882.0-00	AC 230 V, 50/60 Hz	263 m^3/h	137m^3/h	310/250 mA	45 W	56 db (A)	117 mm	1.6 kg	air-flaps
01882.9-00	AC 115 V, 50/60 Hz	313 m^3/h	166 m^3/h	560/470 mA	38 W	60 db (A)	117 mm	1.6 kg	air-flaps

AIRFLOW DIRECTION "OUT": INTAKE FILTER FPO 118

Art. No.	Depth in enclosure	Weight (approx.)	Filter mat
11882.0-30	25 mm	0.4 kg	G3 acc. to DIN EN 779, average arrestance A_a 84 %

FILTER MAT FM 086

Filter class	168 x 168 mm	Average arrestance A_a	1 packing unit
G3 acc. to DIN EN 779	Art. No. 08635.0-00	84 %	5 pieces

TECHNICAL DRAWINGS

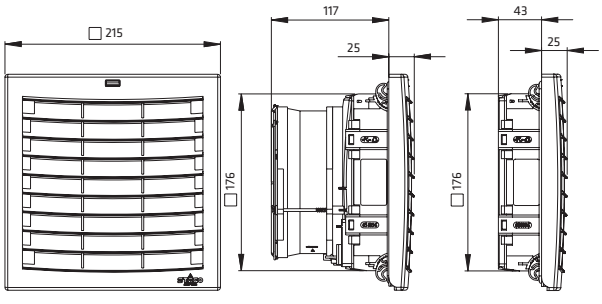

FPI 018 FPI 118

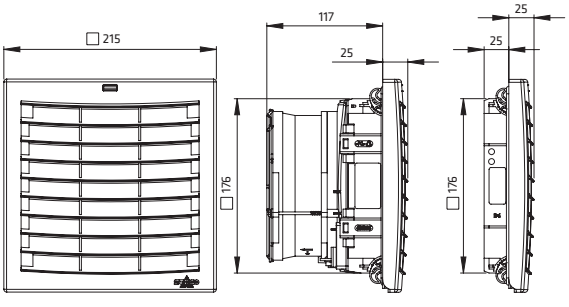

FPO 018 FPO 118

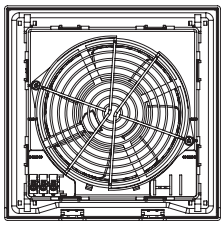

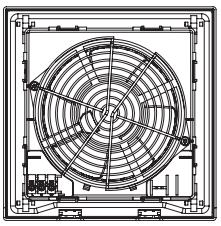

www.stego.de | www.stego.co.uk | www.stegonorden.se

04.04.2017 | Specifications are subject to change without notice. Errors and omissions excepted. Suitability of this product for its intended use and any associated risks must be determined by the end customer/buyer in its final application.