JUMO GmbH & Co. KG
Delivery address: Mackenrodtstraße 14
36039 Fulda, Germany
Postal address: 36035 Fulda, Germany
Phone: +49 661 6003-0
Fax: +49 661 6003-607
Email: mail@jumo.net
Internet: www.jumo.net

JUMO Instrument Co. Ltd.
JUMO House
Temple Bank, Riverway
Harlow, Essex, CM20 2DY, UK
Phone: +44 1279 63 55 33
Fax: +44 1279 62 50 29
Email: sales@jumo.co.uk
Internet: www.jumo.co.uk

JUMO Process Control, Inc.
6724 Joy Road
East Syracuse, NY 13057, USA
Phone: +1 315 437 5866
Fax: +1 315 437 5860
Email: info.us@jumo.net
Internet: www.jumousa.com

JUMO MAERA S25

Level probe

Applications

Level and level measurements[1]

- In rainwater cisterns
- In gray water recycling
- Heating oil and diesel oil tanks
- In AUS32 (known in Europe as "AdBlue®", "DEF" in North America, or "ARLA 32" in Brazil)

Brief description

The JUMO MAERA S25 level probe is used for the continuous hydrostatic level measurement of liquids. Filling heights between 2.50 and 10 mWS (water column) can be achieved in ventilated tanks.

When the level probe is immersed into a liquid, a liquid column emerges above the probe. The liquid column increases as the probe is immersed deeper into the liquid and creates a hydrostatic pressure on the measuring system by the force of its weight. The measured pressure is transferred as a standard signal. The signal is linearly proportional to the rising liquid column.

Any variations in air pressure are automatically compensated for using a protective hose and the surrounding pressure is therefore taken into account.

Further information on our level probes from the JUMO MAERA series can be found in the brochure "Limit Level Measurement and Level Measurement" in the documentation.



Type 401015 with process connection 707

Customer benefits

- **Economic**
  The standardized, constructive design and constant optimization of the production process result in an excellent price-performance ratio of the level probe.
- **Process-reliable**
  The core of the level probe is a piezoresistive measuring cell, which features high overload resistance and is particularly safe, reliable, and temperature resistant. Each level probe is tested in a fully automated measuring and calibration facility to ensure consistently high product quality. A reverse-polarity protection mechanism protects the measuring instrument against damage, ensuring maximum safety during startup.

Special features

- Measuring ranges: 0.25 to 1 bar (2.5 to 10 mWS)
- Medium temperature 0 to 50 °C
- Piezoresistive silicon sensor
- Accuracy: 0.3% MSP[2] (linearity)
- Sensor technology proven thousands of times over
- Reverse-polarity protection mechanism
- Suitable for indoor installation

[1] These recommendations are based on many years of experience; however, in individual cases they may not be fully applicable. We would be happy to provide further information, including regarding additional applications.

[2] MSP = measuring span

Approvals and approval marks (see technical data)

JUMO GmbH & Co. KG
Delivery address: Mackenrodtstraße 14
36039 Fulda, Germany
Postal address: 36035 Fulda, Germany
Phone: +49 661 6003-0
Fax: +49 661 6003-607
Email: mail@jumo.net
Internet: www.jumo.net

JUMO Instrument Co. Ltd.
JUMO House
Temple Bank, Riverway
Harlow, Essex, CM20 2DY, UK
Phone: +44 1279 63 55 33
Fax: +44 1279 62 50 29
Email: sales@jumo.co.uk
Internet: www.jumo.co.uk

JUMO Process Control, Inc.
6724 Joy Road
East Syracuse, NY 13057, USA
Phone: +1 315 437 5866
Fax: +1 315 437 5860
Email: info.us@jumo.net
Internet: www.jumousa.com

Technical data

General Information

Reference conditions	DIN 16086 and DIN EN 60770
Measuring principle	Piezoresistive sensor with stainless steel separating membrane
Pressure transfer means	Synthetic oil
Admissible load changes	> 10 million, 0 to 100 % measuring range
Mounting position	Vertical/hanging from the cable

Measuring range and accuracy

Measuring range bar	Linearity[a] % MSP[e]	Accuracy at 20 °C[c] % MSP	 0 to 50 °C[d] % MSP	Long-term stability[b] % MSP per year	Overload capability bar	Burst pressure bar
0 to 0.25 bar relative pressure	0.3	0.5	1	≤ 0.3	0.75	1
0 to 0.4 bar relative pressure	0.3	0.5	1		1.2	1.6
0 to 0.6 bar relative pressure	0.3	0.5	1		1.8	2.4
0 to 1 bar relative pressure	0.3	0.5	1		3	4

[a] Linearity according to limit point setting

[b] Reference conditions EN 61298-1

[c] Includes: linearity, hysteresis, repeatability, deviation from measuring range start (offset), and measuring range end

[d] Includes: linearity, hysteresis, repeatability, deviation from measuring range start (offset) and measuring range end, thermal influences on measuring range start (offset), and measuring span

[e] MSP = measuring span

Output

Analog output	
Current	
Output 405	4 to 20 mA, two-wire
Voltage	
Output 412	DC 0.5 to 4.5 V, three-wire, ratiometric 10 to 90 % of the voltage supply
Output 415	DC 0 to 10 V, three-wire
Output 418	DC 1 to 5 V, three-wire
Output 420	DC 1 to 6 V, three-wire
Step response T_{90}	≤ 10 ms
Burden	
Current	
4 to 20 mA, two-wire	$R_L \leq (U_B - 10\ V) \div 0.02\ A\ (\Omega)$
Voltage	
DC 0.5 to 4.5 V, three-wire	$R_L \geq 20\ k\Omega$
DC 0 to 10 V, three-wire	$R_L \geq 10\ k\Omega$
DC 1 to 5 V, three-wire	$R_L \geq 10\ k\Omega$
DC 1 to 6 V, three-wire	$R_L \geq 10\ k\Omega$

JUMO GmbH & Co. KG
Delivery address: Mackenrodtstraße 14
36039 Fulda, Germany
Postal address: 36035 Fulda, Germany
Phone: +49 661 6003-0
Fax: +49 661 6003-607
Email: mail@jumo.net
Internet: www.jumo.net

JUMO Instrument Co. Ltd.
JUMO House
Temple Bank, Riverway
Harlow, Essex, CM20 2DY, UK
Phone: +44 1279 63 55 33
Fax: +44 1279 62 50 29
Email: sales@jumo.co.uk
Internet: www.jumo.co.uk

JUMO Process Control, Inc.
6724 Joy Road
East Syracuse, NY 13057, USA
Phone: +1 315 437 5866
Fax: +1 315 437 5860
Email: info.us@jumo.net
Internet: www.jumousa.com

Electrical data

Voltage supply U_B[a]	
4 to 20 mA, two-wire	DC 10 to 30 V
DC 0.5 to 4.5 V, three-wire	DC 5 V
DC 0 to 10 V, three-wire	DC 11.5 to 30 V
DC 1 to 5 V, three-wire	DC 10 to 30 V
DC 1 to 6 V, three-wire	DC 10 to 30 V
Nominal voltage	DC 24 V
Reverse voltage protection	Yes (except DC 0.5 to 4.5 V, three-wire)
Max. current consumption	25 mA
Electrical circuit	SELV
Requirements	The device must be equipped with an electrical circuit that meets the requirements of EN 61010-1 with regard to "Limited-energy circuits".

[a] Residual ripple: The voltage peaks must not exceed or fall below the specified voltage supply values!

Electrical connection

For this construction, a stranded PVC cable is encased in an application-oriented protective hose made from either PE or PA.

To prevent moisture penetrating into the protective hose, in this case the pressure equalization hose, the delivery includes a hose end piece with the fitting materials.

Outer diameter	8 mm
Bending radius	Approx. 120 mm
	It is vital to take into account that if the protective hose is kinked or pinched, this will prevent ambient pressure compensation.
Admissible medium temperatures	0 to 50 °C (depending on the medium and the level probe)
Yield stress	
PE protective hose	10 M Pa
PA protective hose	22 M Pa

Mechanical features

Ensure the medium durability of the material!

Materials	
Process connection	Stainless steel 316 L (G 1/4 inside),
	Stainless steel 316 Ti (M3 (× 0.5) inside)
Measuring membranes	Stainless steel 316 L
Case	Stainless steel 304
Protective cap	Hard PVC
Protective hose	PE (natural: non UV resistant),
	PA (natural: non UV resistant; black: UV resistant)
	The non UV-resistant cable is not suitable for outdoor use.
Weight	90 g (without cable)
Diameter	25 mm

JUMO GmbH & Co. KG
Delivery address: Mackenrodtstraße 14
36039 Fulda, Germany
Postal address: 36035 Fulda, Germany
Phone: +49 661 6003-0
Fax: +49 661 6003-607
Email: mail@jumo.net
Internet: www.jumo.net

JUMO Instrument Co. Ltd.
JUMO House
Temple Bank, Riverway
Harlow, Essex, CM20 2DY, UK
Phone: +44 1279 63 55 33
Fax: +44 1279 62 50 29
Email: sales@jumo.co.uk
Internet: www.jumo.co.uk

JUMO Process Control, Inc.
6724 Joy Road
East Syracuse, NY 13057, USA
Phone: +1 315 437 5866
Fax: +1 315 437 5860
Email: info.us@jumo.net
Internet: www.jumousa.com

Environmental influences

Admissible temperatures	
Medium	0 to 50 °C The device must **not** freeze in the medium! A restriction may be required depending on the medium.
Storage	-20 to +80 °C, dry
Electromagnetic compatibility (EC)	According to DIN EN 61326-1, DIN EN 61326-2-3
Interference emission	Class B[a]
Interference immunity	Industrial requirements
Protection type	IP68, according to DIN EN 60529, submersible to 20 m

[a] The product is suitable for industrial use as well as for households and small businesses.

Approvals and approval marks

EAC	
Test facility	«Промтехконтроль»
Certificate/certification number	ЕАЭС N RU Д-DE.PA01.B.80830/21
Inspection basis	TR TS 020/2011
Valid for	Type 401015

JUMO GmbH & Co. KG
Delivery address: Mackenrodtstraße 14
36039 Fulda, Germany
Postal address: 36035 Fulda, Germany
Phone: +49 661 6003-0
Fax: +49 661 6003-607
Email: mail@jumo.net
Internet: www.jumo.net

JUMO Instrument Co. Ltd.
JUMO House
Temple Bank, Riverway
Harlow, Essex, CM20 2DY, UK
Phone: +44 1279 63 55 33
Fax: +44 1279 62 50 29
Email: sales@jumo.co.uk
Internet: www.jumo.co.uk

JUMO Process Control, Inc.
6724 Joy Road
East Syracuse, NY 13057, USA
Phone: +1 315 437 5866
Fax: +1 315 437 5860
Email: info.us@jumo.net
Internet: www.jumousa.com

Dimensions

Process connection

567

G 1/4 female

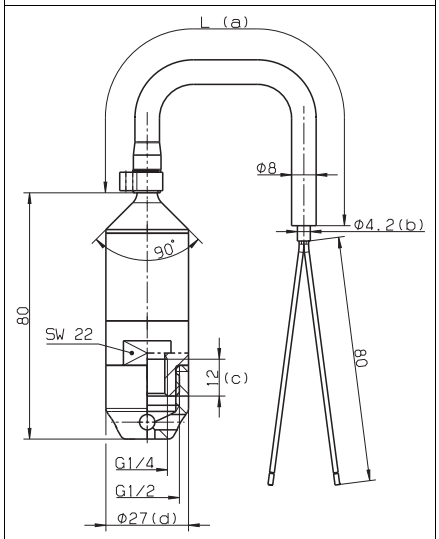

L (a)	Cable length according to customer preference
(b)	Ø 4.6 for three-wire output
(c)	Maximum screw-in depth
(d)	The protective cap has three bore holes (Ø 3) and protects the case against contact corrosion and the sensitive separating membrane.

659

Connection open at bottom

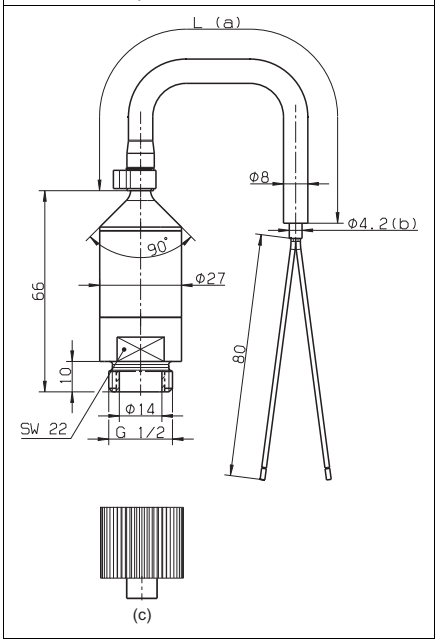

L (a)	Cable length according to customer preference
(b)	Ø 4.6 for three-wire output
(c)	The protective cap is provided for transportation and has to be removed before implementing.

707

M3 (× 0.5) female

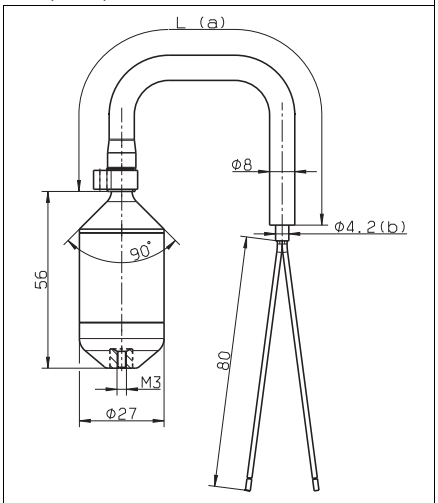

L (a)	Cable length according to customer preference
(b)	Ø 4.6 for three-wire output

Accessories

Terminal head for pressure compensation

Tank cover mounting

Part no. 00602743

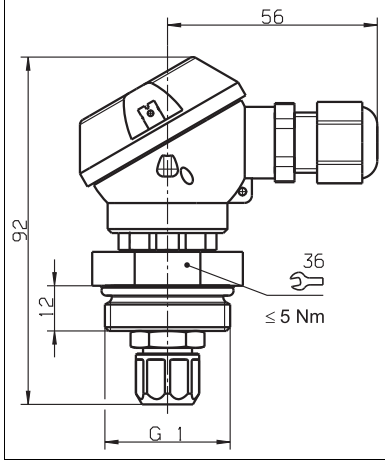

Wall mounting

Part no. 00602744

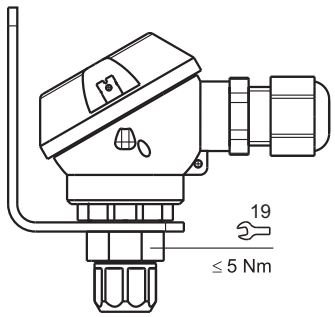

JUMO GmbH & Co. KG
Delivery address: Mackenrodtstraße 14
36039 Fulda, Germany
Postal address: 36035 Fulda, Germany
Phone: +49 661 6003-0
Fax: +49 661 6003-607
Email: mail@jumo.net
Internet: www.jumo.net

JUMO Instrument Co. Ltd.
JUMO House
Temple Bank, Riverway
Harlow, Essex, CM20 2DY, UK
Phone: +44 1279 63 55 33
Fax: +44 1279 62 50 29
Email: sales@jumo.co.uk
Internet: www.jumo.co.uk

JUMO Process Control, Inc.
6724 Joy Road
East Syracuse, NY 13057, USA
Phone: +1 315 437 5866
Fax: +1 315 437 5860
Email: info.us@jumo.net
Internet: www.jumousa.com

Connection diagram

The connection diagram in the data sheet provides information on product selection.

For the electrical connection, only use the installation instructions or the operating manual.

Connection		**Terminal assignment**
		
		Cable[a]
4 to 20 mA, two-wire		
Voltage supply DC 10 to 30 V, Rated voltage supply DC 24 V	$U_{B/S}$+[b] 0 V/S-	White Brown
DC 0.5 to 4.5 V, ratiometric		
Voltage supply DC 5 V, Rated voltage supply DC 5 V	U_B[b] 0 V/S- S+	White Brown Green
DC 0 to 10 V, three-wire		
Voltage supply DC 11.5 to 30 V, Rated voltage supply DC 24 V	U_B[b] 0 V/S- S+	White Brown Green
DC 1 to 5 V, three-wire **DC 1 to 6 V, three-wire**		
Voltage supply DC 10 to 30 V, Rated voltage supply DC 24 V	U_B[b] 0 V/S- S+	White Brown Green

[a] For cable specifications, see installation instructions B 401015.4, chapter 6 "Installation and mounting".

[b] The voltage peaks must not exceed or fall below the specified voltage supply values!

JUMO GmbH & Co. KG
Delivery address: Mackenrodtstraße 14
36039 Fulda, Germany
Postal address: 36035 Fulda, Germany
Phone: +49 661 6003-0
Fax: +49 661 6003-607
Email: mail@jumo.net
Internet: www.jumo.net

JUMO Instrument Co. Ltd.
JUMO House
Temple Bank, Riverway
Harlow, Essex, CM20 2DY, UK
Phone: +44 1279 63 55 33
Fax: +44 1279 62 50 29
Email: sales@jumo.co.uk
Internet: www.jumo.co.uk

JUMO Process Control, Inc.
6724 Joy Road
East Syracuse, NY 13057, USA
Phone: +1 315 437 5866
Fax: +1 315 437 5860
Email: info.us@jumo.net
Internet: www.jumousa.com

Connection example

Current output

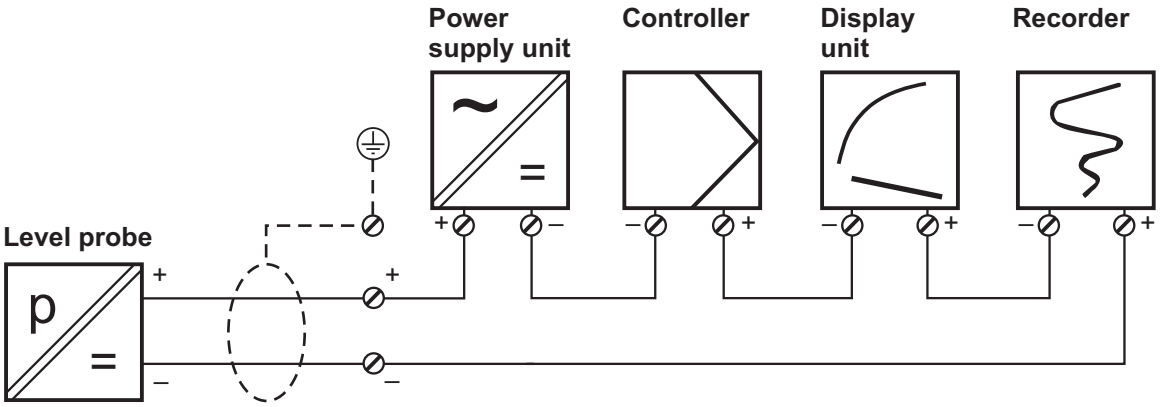

Voltage output

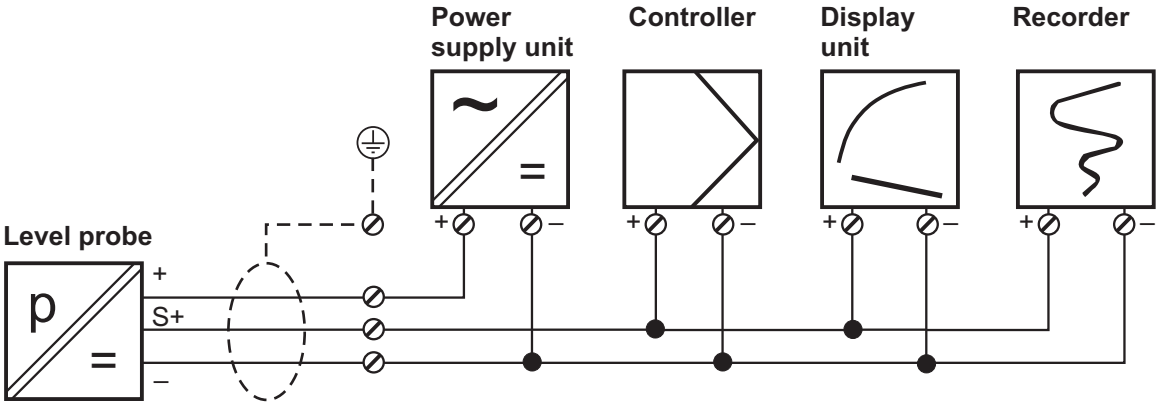

JUMO GmbH & Co. KG
Delivery address: Mackenrodtstraße 14
36039 Fulda, Germany
Postal address: 36035 Fulda, Germany
Phone: +49 661 6003-0
Fax: +49 661 6003-607
Email: mail@jumo.net
Internet: www.jumo.net

JUMO Instrument Co. Ltd.
JUMO House
Temple Bank, Riverway
Harlow, Essex, CM20 2DY, UK
Phone: +44 1279 63 55 33
Fax: +44 1279 62 50 29
Email: sales@jumo.co.uk
Internet: www.jumo.co.uk

JUMO Process Control, Inc.
6724 Joy Road
East Syracuse, NY 13057, USA
Phone: +1 315 437 5866
Fax: +1 315 437 5860
Email: info.us@jumo.net
Internet: www.jumousa.com

Order details

	(1)	**Basic type**
401015/000		JUMO MAERA S25 – Level probe
	(2)	**Input**
451		0 to 0,25 bar relative pressure
452		0 to 0,4 bar relative pressure
453		0 to 0,6 bar relative pressure
454		0 to 1 bar relative pressure
	(3)	**Output**
405		4 to 20 mA, two-wire
412		DC 0.5 to 4.5 V, three-wire
415		DC 0 to 10 V, three-wire
418		DC 1 to 5 V, three-wire
420		DC 1 to 6 V, three-wire
	(4)	**Process connection**
567		G 1/4″ inside
659		Connection open at the bottom
707		M3 (× 0.5) inside
	(5)	**Process connection material**
20		CrNi (stainless steel)
	(6)	**Electrical connection type**
11		Attached cable
	(7)	**Protective hose**
1		PE protective hose (not UV resistant)
2		PA protective hose (not UV resistant)
3		PA protective hose (UV resistant)
	(8)	**Cable length of the connecting cable**
005		5 m
010		10 m
025		25 m
	(9)	**Extra codes**
000		None
691		Improved moisture and vibration protection

	(1)		**(2)**		**(3)**		**(4)**		**(5)**		**(6)**		**(7)**		**(8)**		**(9)**
Order code		-		-		-		-		-		-		-		/	
Order example	401015/000	-	452	-	405	-	707	-	20	-	11	-	1	-	005	/	000

Stock versions

Order code	**Part no.**
401015/000-451-405-567-20-11-1-005/000	00557854
401015/000-452-405-567-20-11-1-010/000	00560384
401015/000-453-405-567-20-11-1-010/000	00560386

JUMO GmbH & Co. KG
Delivery address: Mackenrodtstraße 14
36039 Fulda, Germany
Postal address: 36035 Fulda, Germany
Phone: +49 661 6003-0
Fax: +49 661 6003-607
Email: mail@jumo.net
Internet: www.jumo.net

JUMO Instrument Co. Ltd.
JUMO House
Temple Bank, Riverway
Harlow, Essex, CM20 2DY, UK
Phone: +44 1279 63 55 33
Fax: +44 1279 62 50 29
Email: sales@jumo.co.uk
Internet: www.jumo.co.uk

JUMO Process Control, Inc.
6724 Joy Road
East Syracuse, NY 13057, USA
Phone: +1 315 437 5866
Fax: +1 315 437 5860
Email: info.us@jumo.net
Internet: www.jumousa.com

Accessories

Item	Description	Part no.
Terminal head form J for pressure compensation Tank cover mounting 	The terminal head is only suitable for application in the level probe variant JUMO MAERA S25 (type 401015). It is used to mount the level probes cost-effectively and in the best possible way. Protection type IP 67 is achieved. By using it locally with the tank mounting or wall mounting versions, a rapid pressure compensation can be achieved and the length of the special cable can be minimized. The costs are thereby reduced as an electric standard cable can be used as the outgoing cable from the terminal head. Furthermore, the direction (for example to the control cabinet) can be individually specified.	00602743
Wall mounting 		00602744

Scope of delivery

Item
Hose end piece 
With this device, a standard cable is encased in a protective hose suitable for the application. The hose end piece prevents the hose, which is used as a pressure compensation hose, from being cut off or bent, for example when being routed through a wall. The hose end piece may be used for example in routing through walls in masonry, clamp or cutting ring fittings in a tank, or cable glands in a control cabinet. The hose end piece is supplied with the device.