B2900C/B2900CL Series Precision Source/Measure Unit

Graphical SMU solves precision measurement challenges and improve test efficiency from lab to manufacturing for a wide range of applications at the cost performance



KEYSIGHT

Table of Contents

Get Rapid and Accurate Measurement Results 3

The Best SMU Solution for a Broad Range of IV Measurements 5

Integrated Source and Measurement Capabilities Simplify Difficult IV Measurement Tasks 7

Wide Voltage and Current Coverage for Testing a Variety of Devices 8

Superior Bench-Top SMU Measurement Performance 10

Fast Throughput Lowers Cost-of-Test 12

Overview: Why Use an SMU? 13

Innovative GUI and 4.3" Color LCD Display Facilitate Fast Bench-top Test, Debug and Characterization 15

Multiple Remote Control Choices Optimize Performance for Different Applications 16

Available Accessories Facilitate Special Test Needs 18

Comparison Table by Model 19

Specifications 20

Furnished Accessories 32

Ordering Information 33

Get Rapid and Accurate Measurement Results

The Keysight B2900C/CL Series Precision Source/Measure Units are compact and cost-effective bench-top Source/Measure Units (SMUs) with the capability to source and measure both voltage and current. These capabilities make the B2900C/CL Series SMU ideal for a wide variety of IV (current versus voltage) measurement tasks that require both high resolution and accuracy.

The B2900C/CL Series SMU has a voltage maximum of ±210 V, a current maximum ±3 A DC, and ±10.5 A pulsed sourcing capabilities. With a precision minimum of 10 fA/100 nV sourcing and measuring resolution, a color LCD Graphical User Interface (GUI) and several task-based viewing modes will improve your productivity for test, debug, and characterization.

The B2900C/CL Series SMU offers superior measurement throughput and supports conventional SMU SCPI commands for easy test code migration. These features improve efficiency and lower the cost of ownership when integrating the SMUs into systems for production test.

The B2900C/CL Series SMU consists of six models — the B2901CL, B2910CL, B2901C, B2902C, B2911C, and B2912C. The differentiation between the models is according to their available features: output range, number of digits displayed, measurement resolution, minimum timing interval, viewing modes, and SMU channels. These model choices make it easy for selecting the performance and price you need for your testing requirements.



Single view



Dual view

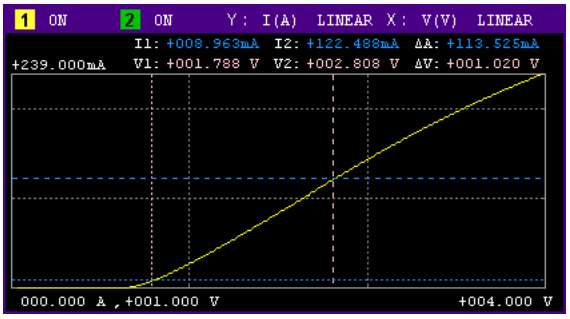

Graph view

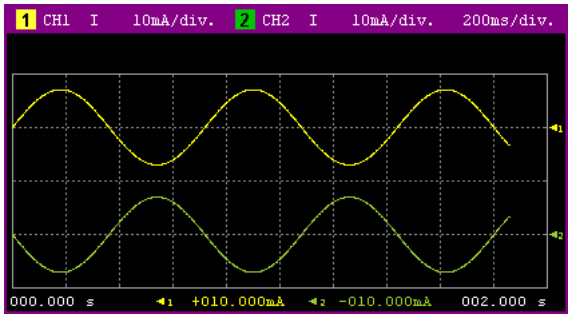

Roll view

Feature	Benefit
Integrated 4-quadrant sourcing and measuring capabilities	Easily and accurately measure current and voltage using a single instrument without the need to manually change any connections
Measurement range: ±210 V, ±3 A (DC), ±10.5 A (pulsed)	A single SMU product covers both high voltage and high current measurement needs, allowing for more standardization and simplifying inventory and support concerns.
Source and measurement resolution down to 10 fA and 100 nV	Can make low-level measurements using a low-cost bench-top SMU that were previously only possible using a more expensive semiconductor device analyzer.
User-friendly front panel GUI with 4.3 inch color LCD display supports both graphical and numerical view modes	Can quickly and easily perform measurements and display data on the front panel, thereby greatly speeding up interactive test, characterization and debug operations.
10 microsecond digitizing capability	Can capture low frequency phenomena in addition to DC characteristics
PC-based control software	Can make measurements remotely from a PC without the need to program.
Supports both conventional and default SCPI commands	Conventional SCPI commands provide some compatibility with older SMU code (such as Keithley 2400 series) to minimize code conversion work. Default SCPI commands support advanced B2900C/CL Series features
Small form factor with USB2.0, LAN, GPIB and digital I/O interfaces	Easy integration into rack and stack systems.

The Best SMU Solution for a Broad Range of IV Measurements

SMUs are popular and widespread instruments for performing IV measurements in many different fields and applications due to their integrated voltage and current sourcing and measurement capabilities. The B2900C/CL Series SMU provides superior performance and usability at a very reasonable price. In addition, the B2900C/CL Series SMU supports many functions to speed up production test and increase throughput. The versatile measurement capabilities of the B2900C/CL Series SMU make it an ideal choice for a variety of IV measurements such as semiconductor test, active/passive component test and general electronic device and material characterization.

The B2900C/CL Series SMU has a broad application range that spans uses from R&D and education to industrial development, production test and automated manufacturing. Moreover, they work equally well as either standalone or system components.

Testing semiconductors, discrete and passive components

- Diodes, laser diodes, LEDs
- Photodetectors, sensors
- Field Effect Transistors (FETs), Bipolar Junction Transistors (BJTs)
- ICs (analog ICs, RFICs, MMICs, etc)
- Resistor, varistor, thermistors, switches

Testing precision electronics and green energy devices

- Photovoltaic cells
- Power transistors, power devices
- Battery
- Automotive
- Medical instruments
- Power and DC bias source for circuit test

Research and education

- New material investigations
- Nano devices characterization (e.g. CNT)
- Giant Magnetic Resistance (GMR)
- Organic devices
- Any precise voltage/current source and measurement

Application literature is available on the Keysight web site. For more information, please visit www.keysight.com/find/precisionSMU




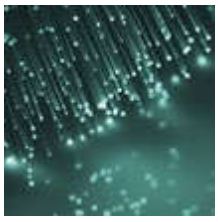

Integrated Source and Measurement Capabilities Simplify Difficult IV Measurement Tasks

The B2900C/CL Series SMU reduces measurement complexity

Performing IV measurements with conventional instruments such as voltage/current sources, Arbitrary Waveform Generators (AWGs), switches, and voltage/current meters is complicated and confusing. It requires deep technical knowledge of both the measurement technique and the instrumentation to perform an accurate measurement.

The B2900C/CL Series SMU integrates many different source and measurement capabilities into one compact form factor. It can operate as a seamless 4-quadrant precision voltage/current source, an electrical load, an accurate voltage/current meter, a pulse generator and an AWG. Its versatile all-in-one integrated source and measurement capabilities allow it to perform a wide variety of measurements from DC to low frequency AC without the need to change connections or use additional equipment. Moreover, the availability of 2-channel models supports the testing of devices with up to three terminals (as long as one terminal can be tied to the circuit common).

If you wish to learn more about the advantages of using SMUs to make IV measurements, then please refer to the section at the back of this datasheet entitled “Overview: Why use an SMU?”

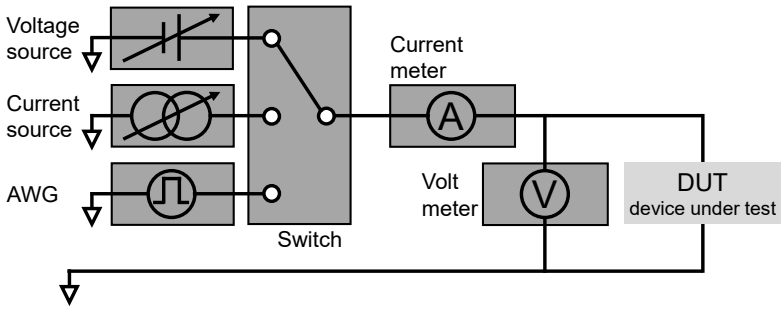

Rack & stack solution:
Multiple instruments connected together with no easy means to coordinate them.

Same measurement using an SMU



SMU solution:
Integrated 4-quadrant voltage and current sourcing and measurement (including AWG function).

Wide Voltage and Current Coverage for Testing a Variety of Devices

Test up to 210 V and 3 A (DC) or 10.5 A (pulsed) with a single instrument

The B2900C SMUs can source and measure ±210 V and currents of ±3 A DC, or ±10.5 A pulsed. This performance versatility enables you to standardize on a single SMU model, which minimizes support costs. These capabilities are present on both single– and dual-channel versions. Both channels in the 2-channel version operate independently.

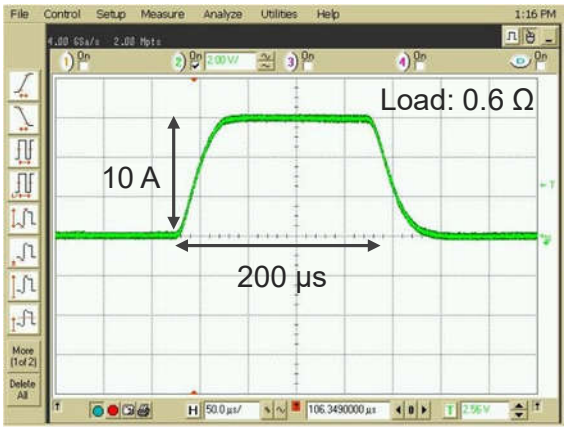

Figure 1. You can create current pulses of up to 10.5 amps, which helps to minimize device self-heating effects.

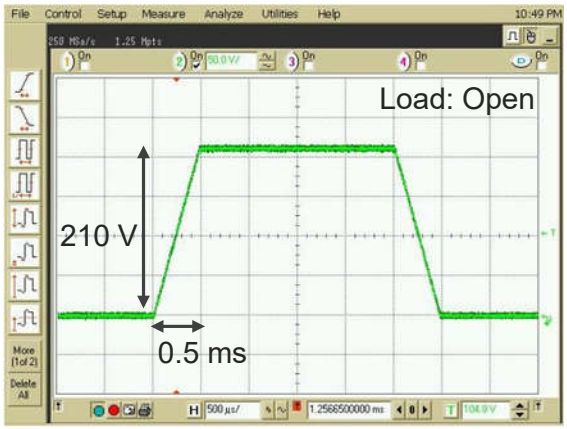

Figure 2. You can ramp up to a voltage of 200 V in 0.5 millisecond, which is useful for evaluating high-power components.

Integrated sweep and arbitrary waveform measurement functionality

The B2900C/CL Series SMU has capabilities that allow it to perform more than just simple DC and pulsed measurements. The B2900C/CL Series SMUs have a built-in sweep capability that supports all of the standard sweep parameters such as linear and logarithmic modes, single and double sweep functions and constant and pulsed sweep operation. The B2900C/CL Series SMU's GUI fully supports the sweep measurement function, thereby allowing sweep measurements to be made and displayed quickly from the instrument front panel. Of course, the user can also make the same sweep measurements just as efficiently on the B2900C/CL Series SMU under remote control using SCPI commands. This integrated sweep measurement capability improves efficiency and reduces measurement setup time.

The B2900C/CL Series SMU has Arbitrary Waveform Generation (AWG) and list sweep capabilities. The AWG and list sweep functions enable you to create waveforms with up to 100 000 steps for maximum flexibility while the B2901CL SMU has up to 10 000 steps. You can specify a waveform of arbitrary shape using familiar spreadsheet compatible data-entry formats. The AWG and list sweep features are especially useful when characterizing devices where the response varies depending on the applied voltage or current. You now have the flexibility to focus on areas of interest.

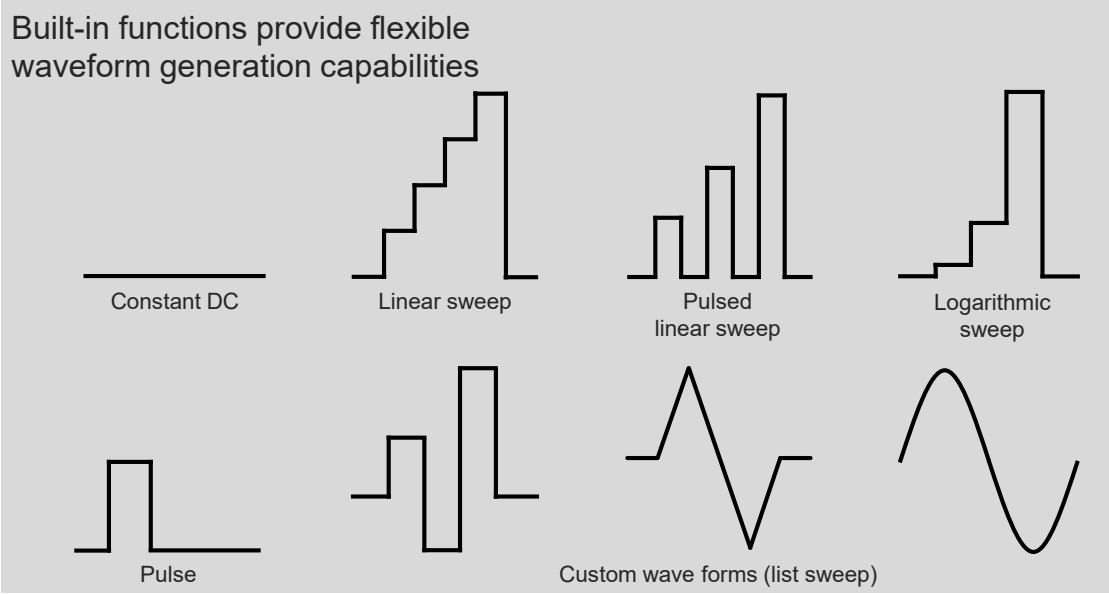

Superior Bench-Top SMU Measurement Performance

Source and measurement resolution - 10 fA and 100 nV

The B2900C Series SMU consists of four models — the differentiation is between the number of channels, and measurement and sourcing resolution. The B2901C (single-channel) and B2902C (dual-channel) SMUs have 100 fA and 100 nV measurement resolution, 1 pA, and 1 µV sourcing resolution. The B2911C (single-channel) and B2912C (dual-channel) SMUs have 10 fA and 100 nV both measurement and sourcing resolution.

The B2900CL Series SMU consists of two models. The B2901CL SMU has 1 pA and 100 nV measurement resolution, 10 pA, and 1 µV sourcing resolution. The B2910CL SMU has 10 fA and 100 nV measurement resolution, 100 fA, and 1 µV sourcing resolution.

The B2900C/CL Series SMUs support popular banana jack style inputs for cost-effective and flexible connectivity. For low current measurements below 1 nA, banana jack to triaxial adapters are available.

Capture transient phenomena effortlessly

The B2900C/CL Series SMUs support a high-speed sampling measurement function that permits the capture and display of low-frequency transient phenomena. The B2901CL and B2910CL SMUs support a 200 µs (5000 points/second) and 50 µs (20 000 points/second) sampling rate. The B2901C and B2902C SMUs support a 20 µs (50 000 points/second) sampling rate, and the B2911C and B2912C SMUs support a 10 µs (100 000 points/second) sampling rate. The maximum achievable sampling rate depends on many factors, including signal level, ambient noise, and desired resolution.

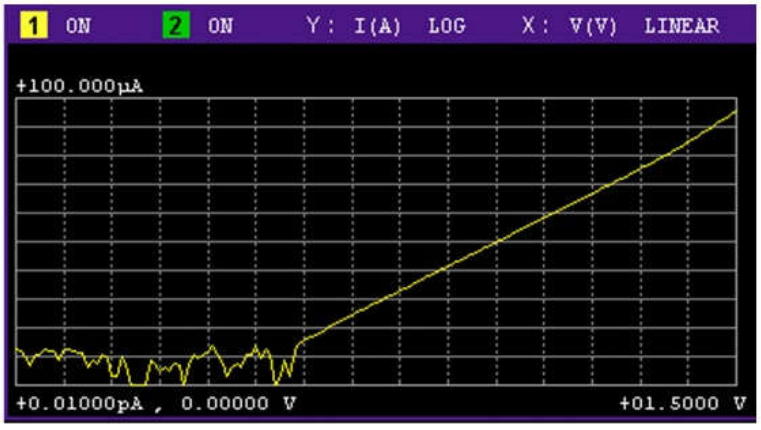

Figure 3. You can make and display accurate low-current measurements directly on the B2900C/CL front panel.

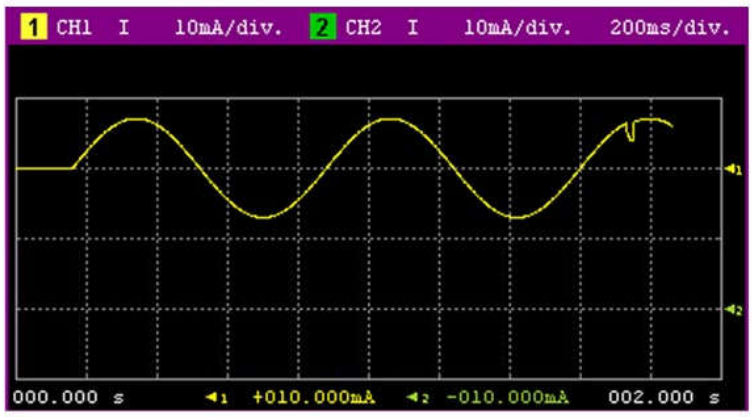

Figure 4. Roll view mode allows you to capture low-frequency transient phenomena.

4-wire measurement capability permits accurate low resistance measurement

When measuring small resistances, the innate cable resistance can create serious measurement error. To solve this, the B2900C/CL Series SMU supports a 4-wire (also known as a remote sense or Kelvin connection) measurement function. In the 4-wire scheme two of the connectors force current and the other two connectors measure voltage. Since the connectors measuring voltage do not have any current flowing through them, they can accurately sense the actual voltage at the DUT.

Measure large capacitive loads without oscillation

Large capacitive loads can sometimes cause SMUs to oscillate. To mitigate this, the B2900C/CL Series SMU supports a high capacitance measurement mode. The high capacitance mode enables the measurement of large capacitive loads without having to worry about SMU oscillation.

Fast Throughput Lowers Cost-of-Test

Best-in-class measurement throughput

Although an excellent R&D tool, the B2900C/CL Series SMU is also well-suited for production test. It can achieve excellent accuracy and repeatability at even short integration times. The B2900C/CL Series SMU possesses the fastest measurement speed of any SMU in its class.

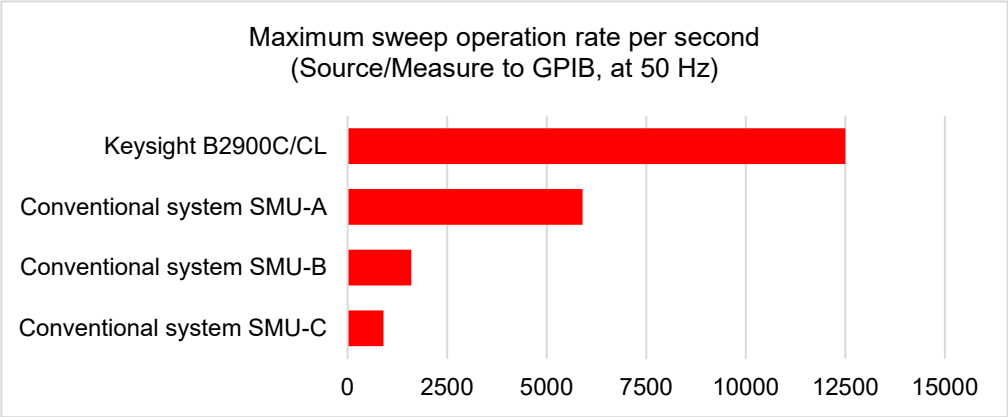

Program memory and trace buffer features improve throughput

To reduce bus communication time, the B2900C/CL Series SMUs support a program memory feature that enables you to store long strings of SCPI commands within the instrument. You can execute these code sequences by sending a single command across the communication bus to improve throughput for frequently performed command strings. The B2900C/CL Series SMUs support a trace buffer that can store up to 100 000 data points while the B2901CL stores 10 000 data points. Downloaded results from multiple measurements are available at once to improve overall throughput while reducing the data transfer time.

SCPI commands provide compatibility and versatility

Standard Commands for Programmable Instruments (SCPI) are a popular and easy-to-understand instrument control protocol. The B2900C/CL Series SMU supports two SCPI command sets, conventional and default, to provide both code compatibility and flexibility. The conventional command set has a large number of its commands compatible with those of older SMUs (such as the Keithley 2400) to minimize code conversion work. The default command set supports advanced B2900C/CL Series SMU features and they should be used to fully utilize its performance and capabilities.

Overview: Why Use an SMU?

Resource integration reduces measurement error

An SMU is an instrument that combines the capabilities of a current source, a voltage source, a current meter and a voltage meter (along with the capability to switch easily between these various functions). Because the source and measurement circuitry are closely integrated, the user can achieve far better measurement performance with less measurement error than would be possible by using various independent instruments to make the same measurement.

Feedback mechanism stabilizes voltage and current sourcing

Since SMUs have the ability to very accurately measure their own current and voltage output, they have many advantages over conventional power supplies. All SMUs have internal feedback loops that provide instantaneous feedback to the sourcing circuitry, which in-turn allows the SMU output to remain accurate and stable even if the load conditions change unexpectedly.

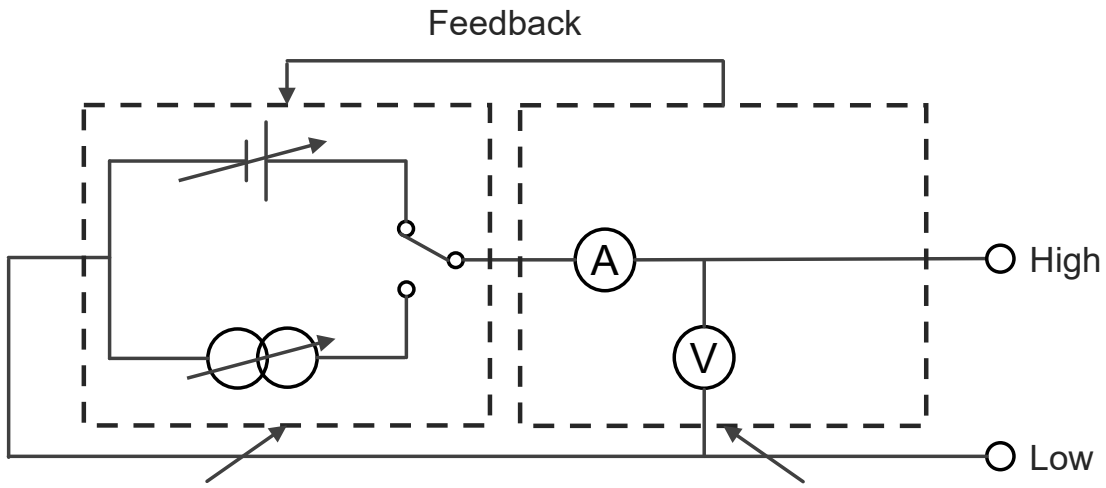

Source block:
Precision voltage and current source/sink with sweep, pulse capabilities. Voltage/current limit capability is also available.

Measurement block:
Precision voltage and current meter with high speed sampling capability.

Limit (compliance) feature prevents device damage

SMUs also possess a voltage and current limit (compliance) feature that allows the user to set limits and to protect devices from damage caused by excessive voltage or current. Although the SMU normally continues to function when it reaches the user-specified limit value, it can also be set to shutdown just like the Over Current Protection (OCP) and Over Voltage Protection (OVP) functions do on a power supply.

Accurate timing control of source and measurement resources

The integration of the source and measurement resources in an SMU allows much tighter synchronization than would be possible with separate instruments. Moreover, the B2900C/CL Series SMU provides very flexible triggering options that allow the measurements points to be defined independently from the sourced current or voltage waveform. On two channel units you can operate both channels in synchronization or independently, and under remote control you can trigger multiple units in unison using a group trigger signal.

Innovative GUI and 4.3" Color LCD Display Facilitate Fast Bench-top Test, Debug and Characterization

The B2900C/CL Series SMU's front panel has many features that make interactive use fast and friendly. These include a 4.3" color LCD display, a USB2.0 memory I/O port, an assist key, an alphanumeric keypad and a rotary knob. The 4.3" color LCD display supports both graphical and numerical view modes and enables test setup and check test results quickly. The USB2.0 memory port supports easy data storing and porting. The Innovative graphical user interfaces, such as single view, dual view, graph view, roll view and zoom, improves usability and productivity of bench-top tests, debug and characterizations dramatically.

Single view:

Single view provides basic and advanced settings and display capabilities for the selected channel from the front panel of the instrument. No additional controller or software is required.

Dual view:

Dual view provides the basic settings and display capabilities for both channels 1 and 2. Up to 6. digits can be displayed in dual view mode. This mode is available only for the B2902C/B2912C.

Graph view:

Graph View displays measurement results on XY graphs (such as I-V and I-t/V-t curves) on up to 2 channels. This is useful for quick evaluation of device characteristics, especially those obtained from sweep measurements.

Roll view:

Roll view draws I-t or V-t curves similar to the curves drawn by a strip chart recorder. Up to 1000 acquired data points can be displayed and updated while the measurement is still in progress. Roll view's continuous measurement capability is especially useful for monitoring low frequency phenomena. Roll view is available only for the B2911C / B2912C.

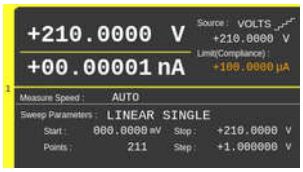

Single View



Dual View

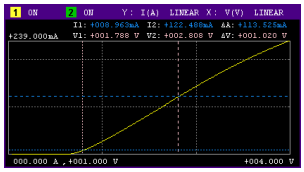
Graph View

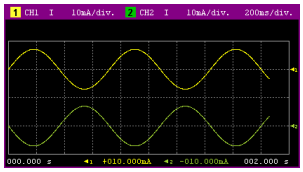
Roll View

Multiple Remote Control Choices Optimize Performance for Different Applications

The B2900C/CL Series SMU offers multiple options for instrument remote control at little or no cost. Four solutions are available: PathWace BenchVue, B2900C/CL Graphical Web Interface, PW9251A PathWave IV Curve Software, and EasyEXPERT group+. These multiple software control options allow you to choose the solution that best fits your particular application.

PathWave BenchVue

PathWave BenchVue allows you to control the B2900C/CL Series SMUs as voltage/current sources from a PC without the need to do any programming. In addition, because PathWave BenchVue supports a wide variety of Keysight instruments (oscilloscopes, meters, etc.) it is a good choice when you need to integrate together many different types of instruments on a benchtop.

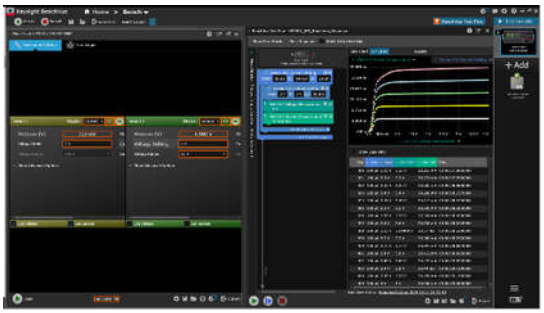

Graphical web interface

The Keysight B2900C/CL Series SMU has a built-in LXI compliant web server that allows any Java enabled web browser (such as Internet Explorer) to control it over the LAN. The graphical web interface supports all of the basic measurement functions such as spot measurements, sweep measurements and pulsed source measurements. Since no special software is required this feature is convenient for making quick measurements on the fly.

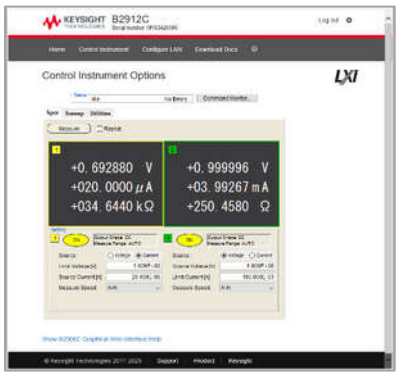

PW9251A PathWave IV Curve software

The PW9251A PathWave IV Curve is a ready-made GUI software to perform a variety of synchronous current-voltage (IV) measurements without programming. Various analysis function on graphs and tables allow users to review test results immediately after the measurement. Export functions of graphs with markers and tables support efficient reporting. In addition, the test result files contains all the settings, allowing users to accurately review and repeat the test. The PW9251A PathWave IV Curve accelerates your research, development and design verification with increasing productivity, enabling more accurate and reliable data acquisition, and more efficient use of the equipment.

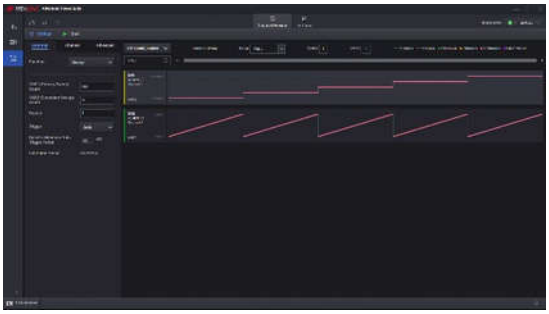

EasyEXPERTgroup+

Keysight EasyEXPERT group+ offers a robust IV parametric characterization solution for a wide range of devices and materials. It has an intuitive GUI (graphical user interface) that operates entirely with a mouse and keyboard, enabling you to simplify everyday characterization tasks such as test setup and execution, data analysis, data management/protection, etc. In addition, EasyEXPERT group+ facilitates the characterization of multi-terminal devices as it supports up to eight SMU channels (four 2-channel SMU units). The best part is that the B2900C/CL includes 15 licenses for the EasyExpert group +, and you can start using it right away at no extra cost.

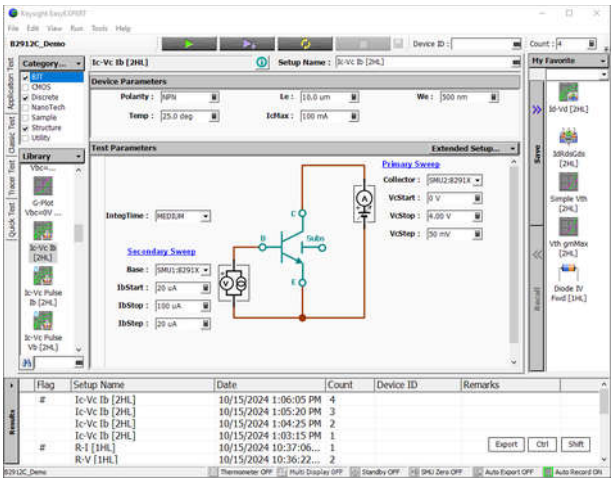

Available Accessories Facilitate Special Test Needs

Easy banana jack connectivity with various accessories

The B2900C/CL Series SMU uses convenient and low-cost banana jack terminals, which support a variety of cables, adaptors and accessories.

Banana to triaxial adaptor for low current measurement

Since banana jacks cannot support low current measurement (i.e. measurements of 1 nA and below), a banana jack to triaxial adapter is available to permit the use of high-performance triaxial cables. This makes it easy to connect to both triaxial-based test fixtures and wafer probers. Of course, both 2-wire and 4-wire triaxial adapters are available.

Test fixtures for testing packaged devices

The Keysight N1295A Device/Component Test Fixture provides a low-cost solution to quickly and easily test packaged devices and components. It has four triaxial inputs and supports voltage and current measurements of up to 42 V and 1 A.

For more advanced packaged testing needs, the Keysight 16442B test fixture provides more capabilities. It offers support for higher pin count devices, more flexible connectivity and an interlock feature for safely applying voltages greater than 42 V. Keysight can supply adapters to use the 16442B interlock with the B2900C/CL Series SMU's digital output.



Banana jack to triaxial adapters are available in both 2-wire and 4-wire versions.



The Keysight N1295A Device/Component Test Fixture provides a low-cost solution to quickly and easily test packaged devices and components.





Using the available accessories and furnished software you can create a low-cost PC-based component testing solution.

Comparison Table by Model

Model number	B2901CL	B2910CL	B2901C/B2902C	B2911C/B2912C
Number of channels	1	1	1 or 2	1 or 2
Output range				
Max. voltage	21 V	210 V	210 V	210 V
Max. current (DC)	1.5 A	1.5 A	3.03 A	3.03 A
Max. current (Pulse)	No	No	10.5 A	10.5 A
Source resolution				
Digit	5.5 digit	5.5 digit	5.5 digit	6.5 digit
Min. voltage	1 µV	1 µV	1 µV	100 nV
Min. current	10 pA	100 fA	1 pA	10 fA
Lowest current range	1 µA	10 nA	100 nA	10 nA
Measurement resolution				
Digit	6.5 digit	6.5 digit	6.5 digit	6.5 digit
Min. voltage	100 nV	100 nV	100 nV	100 nV
Min. current	1 pA	10 fA	100 fA	10 fA
Min. trigger interval	200 µs	50 µs	20 µs	10 µs
Max. trigger count	10 000	100 000	Infinite	Infinite
Max. data buffer size	10 000	100 000	100 000	100 000
Limit test	No	Yes	Yes	Yes
Fast transient mode	No	No	Yes	Yes
Easy file access	No	No	Yes	Yes
View mode				
Single view	Yes	Yes	Yes	Yes
Dual view	No	No	Yes (B2902C)	Yes (B2912C)
Graph view	Yes	Yes	Yes	Yes
Roll view	No	No	No	Yes

Specifications

Specification conditions

Temperature	23 °C ±5 °C
Humidity	30 % to 80 % RH
After 60 minutes warm-up	Ambient temperature change less than ±3 °C after self-calibration execution
Calibration period	1 year
Measurement speed	1 PLC (power line cycle)

Maximum voltage and current

Model	Function	Description
DC or pulsed [1]	210 V	0.105 A
	21 V	1.515 A
	6 V	3.03 A
Pulsed only [1]	200 V	1.515 A
	6 V	10.5 A

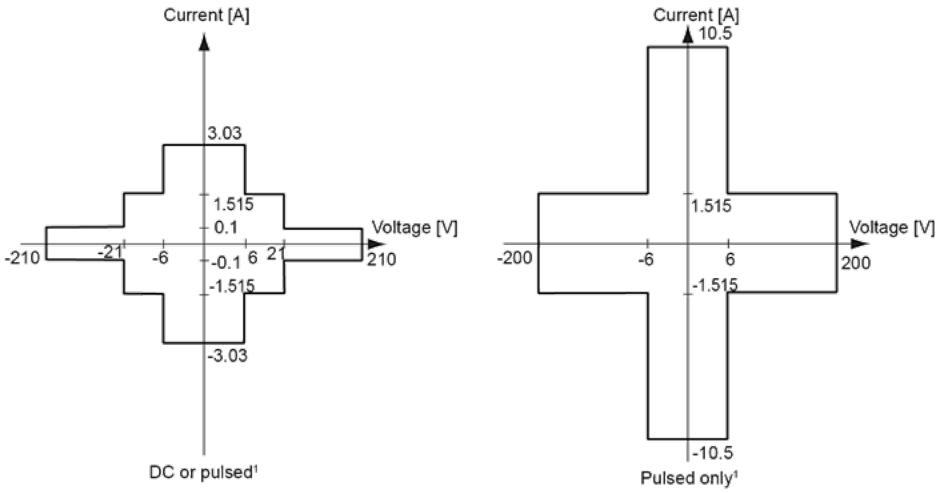

1. See “Maximum pulse width and duty cycle” in Pulse Source Supplemental Characteristics for applicable maximum voltage and current. Pulse mode is not available for B2901CL/B2910CL SMUs.

Voltage source specifications

Range	Programming resolution				Accuracy (% reading + offset)	Noise (peak to peak) 0.1 Hz to 10 Hz [1]	Max voltage (over range)
	B2901CL	B2910CL	B2901C/ B2902C	B2911C/ B2912C			
±200 mV	1 µV	1 µV	1 µV	100 nV	± (0.015 % + 225 µV)	≤ 10 µV	±210 mV
±2 V	10 µV	10 µV	10 µV	1 µV	± (0.02 % + 350 µV)	≤ 20 µV	±2.1 V
±20 V	100 µV	100 µV	100 µV	10 µV	± (0.015 % + 5 mV)	≤ 200 µV	±21 V
±200 V [2]	–	1 mV	1 mV	100 µV	± (0.015 % + 50 mV)	≤ 2 mV	±210 V

Current source specifications

Range	Programming resolution				Accuracy (% reading + offset)	Noise (peak to peak) 0.1 Hz to 10 Hz [1]	Max voltage (over range)
	B2901CL	B2910CL	B2901C/ B2902C	B2911C/ B2912C			
±10 nA [3]	–	100 fA	–	10 fA	± (0.10 % + 50 pA)	≤ 1 pA	±10.5 nA
±100 nA [4]	–	1 pA	1 pA	100 fA	± (0.06 % + 100 pA)	≤ 2 pA	±105 nA
±1 µA	10 pA	10 pA	10 pA	1 pA	± (0.025 % + 500 pA)	≤ 25 pA	±1.05 µA
±10 µA	100 pA	100 pA	100 pA	10 pA	± (0.025 % + 1.5 nA)	≤ 60 pA	±10.5 µA
±100 µA	1 nA	1 nA	1 nA	100 pA	± (0.02 % + 25 nA)	≤ 2 nA	±105 µA
±1 mA	10 nA	10 nA	10 nA	1 nA	± (0.02 % + 200 nA)	≤ 6 nA	±1.05 mA
±10 mA	100 nA	100 nA	100 nA	10 nA	± (0.02 % + 2.5 µA)	≤ 200 nA	±10.5 mA
±100 mA	1 µA	1 µA	1 µA	100 nA	± (0.02 % + 20 µA)	≤ 600 nA	±105 mA
±1 A	10 µA	10 µA	10 µA	1 µA	± (0.03 % + 1.5 mA)	≤ 70 µA	±1.05 A
±1.5 A	10 µA	10 µA	10 µA	1 µA	± (0.05 % + 3.5 mA)	≤ 100 µA	±1.515 A
±3 A [5]	–	–	100 µA	10 µA	± (0.4 % + 7 mA)	≤ 120 µA	±3.03 A
±10 A [4, 5, 6]	–	–	100 µA	10 µA	± (0.4 % + 25 mA) [7]	–	±10.5 A

1. Supplemental characteristics.
2. 200 V range is not available for B2901CL.
3. 10 nA range is not available for B2901CL/B2901C/B2902C.
4. 100 nA range is not available for B2901CL.
5. 3A, 10 A ranges are not available for B2901CL/B2910CL.
6. 10 A range is available only for pulse mode, not available for DC mode.
7. Measurement speed: 0.01 PLC.

Source supplemental characteristics

Temperature coefficient (0 to 18 °C and 28 to 50 °C)		± (0.1 x accuracy)/°C	
Max output power and source/sink limits	B2901CL	31.8 W	
		±6 V @ ±1.515 A, ±21 V @ ±1.515 A, four quadrant source or sink operation	
	B2910CL	31.8 W	
		±6 V @ ±1.515 A, ±21 V @ ±1.515 A, ±210 V @ ±105 mA, four quadrant source or sink operation	
	Other models	31.8 W	
		±6 V @ ±3.03 A, ±21 V @ ±1.515 A, ±210 V @ ±105 mA, four quadrant source or sink operation	
Current limit/compliance		Accuracy is same as current source. Minimum value is 1 % of range, or 1 nA in 10 nA range.	
Voltage limit/compliance		Accuracy is same as voltage source. Minimum value is 1 % of range, or 20 mV in 200 mV range	
Over range		101 % of source range for 1.5 A and 3 A ranges. 105 % of source range other than 1.5 A and 3 A ranges. No over range for 200 V range with current exceeding 105 mA pulse only condition.	
Over temperature protection		Output turns off then resets at over temperature sensed internally	
Voltage Output Settling time		Time required to reach within 0.1 % of final value at open load condition. Step is 10 % to 90 % range	
		200 mV, 2 V ranges	< 50 µs
		20 V range	< 110 µs
		200 V range	< 700 µs
Slew rate		≤ 0.36 V/µs, 20 V and 10 mA ranges, 10 MΩ load resistance	
Current output settling time		Time required to reach within 0.1 % (0.3 % for 3 A range) of final value at short condition. Step is 10 % to 90 % range	
		10 nA, 100 nA ranges	< 10 ms
		1 µA range	< 500 µs
		10 µA, 100 µA ranges	< 250 µs
		1 mA to 3 A ranges	< 80 µs
Noise 10 Hz to 20 MHz (V source)		3 mVrms, 20 V range	
V source overshoot		< ± (0.1 % + 10 mV). Step is 10 % to 90 % range, resistive load	
I source overshoot		< ±0.1 % (< ±0.3 % for 3 A range). Step is 10 % to 90 % range, resistive load	
Voltage source range change overshoot		≤ 250 mV. 100 kΩ load, 20 MHz bandwidth	
Current source range change overshoot		≤ 250 mV/R load, 20 MHz bandwidth	

Pulse source supplemental characteristics

Minimum programmable pulse width	50 µs
Pulse width programming resolution	1 µs
Pulse width definition	The time from 10 % leading to 90 % trailing edge as follows

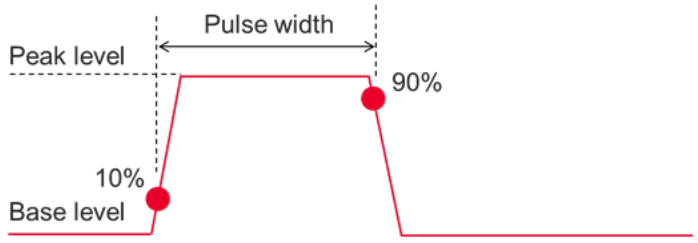

	Pulsed					DC	
	Max voltage	Max peak current	Max base current	Pulse width	Max duty cycle	Max voltage	Max current
DC or pulsed	210 V	0.105 A	0.105 A	50 µs to 99 999.9 s	99.9999 %	210 V	0.105 A
	21 V	1.515 A	1.515 A	50 µs to 99 999.9 s	99.9999 %	21 V	1.515 A
	6 V	3.03A	3.03 A	50 µs to 99 999.9 s	99.9999 %	6 V	3.03 A
Pulsed only	200 V	1.515 A	50 mA	50 µs to 2.5 ms	2.5 %		
	180 V	1.05 A	50 mA	50 µs to 10 ms	2.5 %		
	6 V	5.25 A	0.1 A	50 µs to 3 ms	3.0 %		
	6 V	10.5 A	0.5 A	50 µs to 1 ms	2.5 %		

Minimum pulse width at the given voltage, current and settling conditions

Source value	Limit value	Load	Source settling (% of range)	Min pulse width
200 V	1.5 A	200 Ω	0.1 %	1 ms
6 V	10.5 A	0.6 Ω	0.1 %	0.2 ms
1.5 A	200 V	65 Ω	0.1 %	2.5 ms
10.5 A	6 V	0.5 Ω	0.1 %	0.2 ms
10.5 A [1]	6 V [1]	0.1 Ω [1]	0.1 % [1]	0.1 ms [1]

1. Transient speed mode is set to FAST.

Voltage measurement specifications

Range	Measurement resolution				Accuracy (% reading + offset)
	B2901CL	B2910CL	B2901C/B2902C	B2911C/B2912C	
±200 mV	100 nV	100 nV	100 nV	100 nV	± (0.015 % + 225 µV)
±2 V	1 µV	1 µV	1 µV	1 µV	± (0.02 % + 350 µV)
±20 V	10 µV	10 µV	10 µV	10 µV	± (0.015 % + 5 mV)
±200 V [1]	–	100 µV	100 µV	100 µV	± (0.015 % + 50 mV)

Current measurement specifications

Range	Measurement resolution				Accuracy (% reading + offset)
	B2901CL	B2910CL	B2901C/B2902C	B2911C/B2912C	
±10 nA [2]	–	10 fA	–	10 fA	± (0.10 % + 50 pA)
±100 nA [3]	–	100 fA	100 fA	100 fA	± (0.06 % + 100 pA)
±1 µA	1 pA	1 pA	1 pA	1 pA	± (0.025 % + 500 pA)
±10 µA	10 pA	10 pA	10 pA	10 pA	± (0.025 % + 1.5 nA)
±100 µA	100 pA	100 pA	100 pA	100 pA	± (0.02 % + 25 nA)
±1 mA	1 nA	1 nA	1 nA	1 nA	± (0.02 % + 200 nA)
±10 mA	10 nA	10 nA	10 nA	10 nA	± (0.02 % + 2.5 µA)
±100 mA	100 nA	100 nA	100 nA	100 nA	± (0.02 % + 20 µA)
±1 A	1 µA	1 µA	1 µA	1 µA	± (0.03 % + 1.5 mA)
±1.5 A	1 µA	1 µA	1 µA	1 µA	± (0.05 % + 3.5 mA)
±3 A [4]	–	–	10 µA	10 µA	± (0.4 % + 7 mA)
±10 A [3, 5]	–	–	10 µA	10 µA	± (0.4 % + 25 mA) [6]

1. 200 V range is not available for B2901CL.
2. 10 nA range is not available for B2901CL/B2901C/B2902C.
3. 100 nA range is not available for B2901CL.
4. 3 A, 10 A ranges are not available for B2091BL/B2910CL.
5. 10 A range is available only for pulse mode, not available for DC mode.
6. Measurement speed: 0.01 PLC.

Measurement supplemental characteristics

Temperature coefficient (0 to 18 °C and 28 to 50 °C)	± (0.1 x accuracy)/°C
Over range	102 % of measurement range for 1.5 A and 3 A ranges
	106 % of measurement range other than 1.5 A and 3 A ranges
Voltage measurement range change overshoot	< 250 mV. 100 kΩ load, 20 MHz bandwidth
Current measurement range change overshoot	< 250 mV/R load, 20 MHz bandwidth
Derating accuracy for measurement speed less than 1 PLC	Add % of range using the following table for measurement with PLC < 1

Derating accuracy with PLC setting < 1 PLC

	Voltage range			Current range		
	0.2 V	2 V to 200 V	10 nA	100 nA	1 µA to 100 mA	1 A to 3 A
0.1 PLC	0.01 %	0.01 %	0.1 %	0.01 %	0.01 %	0.01 %
0.01 PLC	0.05 %	0.02 %	1 %	0.1 %	0.05 %	0.02 %
0.001 PLC	0.5 %	0.2 %	5 %	1 %	0.5 %	0.2 %

Timer and triggering specification

Timer	Time stamp	TIMER value automatically saved when each measurement is triggered
	Trigger timing resolution	1 µs to 100 ms
	Accuracy	±50 ppm
	Arm/trigger delay	0 µs to 100 000 s
	Arm/trigger interval	B2901CL: 200 µs to 100 000 s
		B2910CL: 50 µs to 100 000 s
		B2901C/B2902C: 20 µs to 100 000 s
		B2911C/B2912C: 10 µs to 100 000 s
	Arm/trigger event	B2901CL: 1 to 10 000
		Other models: 1 to 100 000
Triggering [1]	Digital I/O Trigger IN to Trigger OUT	≤ 5 µs
	Digital I/O Trigger IN to source change	≤ 5 µs
	Minimum trigger interval	10 µs

1. Supplemental characteristics.

Other supplemental characteristics

Output characteristics

Sensing modes	2-wire or 4-wire (remote-sensing) connections
Low terminal connection	Chassis grounded or floating
Output connectors	Banana jack. Triaxial connections are recommended for sourcing and measuring less than 1 nA. A banana jack to triaxial adapter is available for low current measurement.
Output location	Channel 1 at front, and channel 2 at rear
Maximum load	Normal mode: 0.01 µF
	High capacitance mode: 50 µF
DC floating voltage	Max ±250 V DC between low force and chassis ground
Guard offset voltage (V source)	< 4 mV
Remote sense operation range	Max voltage between High Force and High Sense = 3 V
	Max voltage between Low Force and Low Sense = 3 V
Common mode isolation	> 1 GΩ, < 4500 pF
Maximum sense lead resistance	1 kΩ for rated accuracy
Sense input impedance	> 10 GΩ

Resistance measurement

Resistance measurement can be performed under either auto or manual test conditions. Auto resistance measurement is performed in current source and voltage measurement mode. The total auto resistance measurement error is shown in the table below. The total error of a manual resistance measurement can be calculated using the voltage and current accuracy information as shown below.

Source I mode, manual ohm measurement (4-wire)	Total error = Vmeas/Isrc = R reading x (gain error % of V range + gain error % of I range + offset error of I range/Isrc value %) + (offset error of V range/Isrc value)
Source V mode, manual ohm measurement (4-wire)	Total error = Vsrc/Imeas = 1/ [1/R reading x (gain error % of I range + gain error % of V range + offset error of V range/Vsrc value %) + (offset error of I range/Vsrc value)]
Measurement speed	1 PLC
Applicable for temperature	23 °C ±5 °C
Example of total error calculation	-I source value = 1 mA at 1 mA range
	V measure range = 2 V range
	Total error (% reading + offset) = (0.02 % + 0.02 % + 200 nA/1 mA) + (350 µV/1 mA) = 0.06 % + 0.35 Ω

High capacitance mode

The high capacitance mode permits the measurement of devices with capacitances greater than the normal mode maximum load value of 0.01 µF. In high capacitance mode the maximum allowed value of the load capacitance is 50 µF.

Voltage output settling time	Time required to reach within 0.1 % of final value with 4.7 µF capacitive load on a fixed range at specified current range and limit value		
	200 mV, 2 V ranges		600 µs, at 1 A limit
	20 V range		1.5 ms, at 1 A limit
	200 V range		20 ms, at 100 mA limit
Current measurement settling time	Time required to reach within 0.1 % of final value after voltage source is stabilized on fixed range. Vout is 5 V unless noted.		
	1 µA range		230 ms
	10 µA, 100 µA ranges		23 ms
	1 mA, 10 mA ranges		0.23 ms
	100 mA to 3 A ranges		100 µs
Mode change delay	Delay into high cap mode	1 µA range	230 ms
		10 µA, 100 µA ranges	23 ms
		1 mA to 3 A ranges	1 ms
	Delay out of high cap mode	All ranges	10 ms
Noise 10 Hz to 20 MHz (20 V range)	4.5 mVrms		
Voltage source range change overshoot (20 V range or below)	< 250 mV, 20 MHz bandwidth		
High capacitance mode working conditions	V/I mode	Voltage source mode only	
	Range	Current measurement range is limited to fixed range only. 10 nA and 100 nA ranges are not available.	
Current limit	≥ 1 µA		

Typical performance of auto resistance measurement (4-wire), 2 V range

Range	Resolution	Test current	Current range	Total error (% reading + offset)
2 Ω	1 µΩ	1 A	1 A	0.2 % + 0.000 35 Ω
20 Ω	10 µΩ	100 mA	100 mA	0.06 % + 0.0035 Ω
200 Ω	100 µΩ	10 mA	10 mA	0.065 % + 0.035 Ω
2 kΩ	1 mΩ	1 mA	1 mA	0.06 % + 0.35 Ω
20 kΩ	10 mΩ	100 µA	100 µA	0.065 % + 3.5 Ω
200 kΩ	100 mΩ	10 µA	10 µA	0.06 % + 35 Ω
2 MΩ	1 Ω	1 µA	1 µA	0.095 % + 350 Ω
20 MΩ [1]	10 Ω	100 nA	100 nA	0.18 % + 3.5 kΩ
200 MΩ [1]	100 Ω	10 nA	100 nA	1.08 % + 35 kΩ

1. 20 MΩ, 200 MΩ ranges are not available for B2901CL.

System speeds: Maximum sweep operation reading rates (reading/second) for 50 Hz

Operation reading rate varies by number of sweep steps. Number of sweep steps is specified.

Measure speed	Measure to memory	Measure to GPIB	Source measure to memory	Source measure to GPIB
< 0.001 PLC	20 000	12 500	19 500	12 500
0.01 PLC	4500	3950	4500	3950
0.1 PLC	500	490	500	490
1 PLC	49	49	49	49

Environmental specifications

Environment		For use in indoor facilities
Operating		0 °C to +55 °C, 30 % to 80 % non-condensing [1]
Storage		-30 °C to 70 °C, 10 % to 90 % non-condensing
Altitude		Operating: 0 m to 2000 m, Storage: 0 m to 4600 m
Power supply		100-240 V (±10 %), 50/60 Hz (±5 %) 250 VA maximum (B2901CL, B2910CL, B2901C, B2911C) 300 VA maximum (B2902C, B2912C)
Overvoltage category		II for AC mains
Pollution degree		2
EMC		IEC61326-1/EN61326-1, CISPR11/EN55011 Group 1 Class A, ICES-001 Group 1 Class A, AS/NZS CISPR11 Group 1 Class A, KSC9610-6-1, KSC9811 Group 1 Class A
Safety		IEC61010-1/EN61010-1, UL 61010-1, CAN/CSA-C22.2 No. 61010-1
Compliance and Certifications		CE, UKCA, cCSAus, RCM, ICES/NMB-001, KC
Warm-up		1 hour
Dimensions	Case	88 mm (2U) x 213 mm (half width) x 450 mm
	Working	104 mm x 261 mm x 480 mm (with bumper)
Weight	Net	6.0 kg (B2901CL, B2910CL, B2901C, B2911C), 7.4 kg (B2902C, B2912C)
	Shipping	9.5 kg (B2901CL, B2910CL, B2901C, B2911C), 11.0 kg (B2902C, B2912C)

1. The maximum % Relative Humidity is up to 40 °C and decreases linearly to 38 % RH at 55 °C. From 40 °C to 55 °C, it follows the line of constant dew point

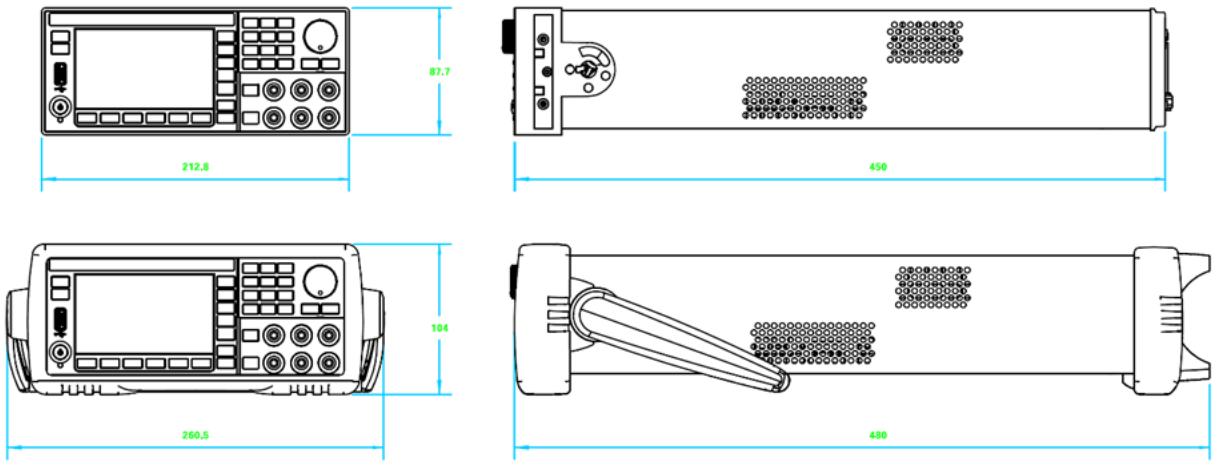

Front panel operation

Front panel interface	4.3” TFT color display (480 x 272, with LED backlight) with keypads and rotary knob
View mode	Single view, Dual view, Graph view and Roll view
Hard keys	Single Trigger and Auto Trigger control, 10-key, Rotary Knob and Cursors, Channel on/off, View, Cancel/Local
Softkeys	Function, System and Input Assist Keys
Indicators	Channel (measurement) status, System status

Source/measurement capabilities

Sweep measurement

Number of steps	B2901CL: 1 to 10 000
	Other models: 1 to 100 000
Sweep mode	Linear, logarithmic (log) or list
Sweep direction	Single or double
Type	DC, or pulse
Min programmable value to create list sweep waveform	B2901CL: Min 200 µs with 1 µs resolution
	B2910CL: Min 50 µs with 1 µs resolution
	B2901C/B2902C: Min 20 µs with 1 µs resolution
	B2911C/B2912C: Min 10 µs with 1 µs resolution

Digitizing/sampling measurement

Min trigger interval (max speed of measurement)	B2901CL: 200 µs (5000 points/s)
	B2910CL: 50 µs (20 000 points/s)
	B2901C/B2902C: 20 µs (50 000 points/s)
	B2911C/B2912C: 10 µs (100 000 points/s)

Data buffers

Max buffer size	B2901CL: 10 000 points/channel
	Other models: 100 000 points/channel

Input/output connectivity

GP-IB		IEEE-488.2
Ethernet		100BASE-T/10BASE-T
USB		USB 2.0 host controller (front)
		USB 2.0 device interface (rear)
Digital I/O	Connector type	25-pin female D
	Input/output pins	14 open drain I/O bits
	Absolute max input voltage	5.25 V
	Absolute min input voltage	-0.25 V
	Max logic L input voltage	0.8 V
	Min logic H input voltage	2.0 V
	Max source current	1 mA @ Vout = 0 V
	Max sink current	50 mA @ Vout = 5 V
	5 V power supply pin	Limited to 500 mA, solid state fuse protected
	Safety interlock pin	One active high pin and one active low pin. Activation of both pins enables output voltage > 42 V
	Maximum number of simultaneously triggered units (using Digital I/O) [1]	8

1. Supplemental characteristics.

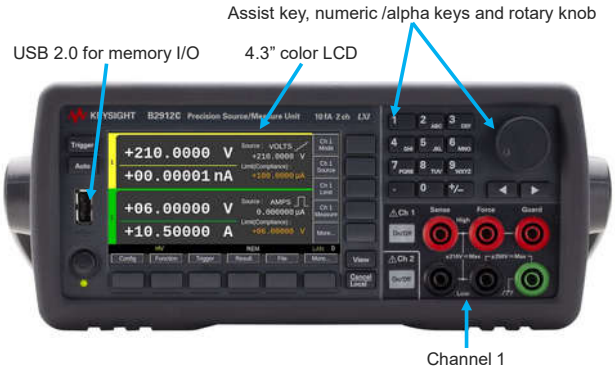

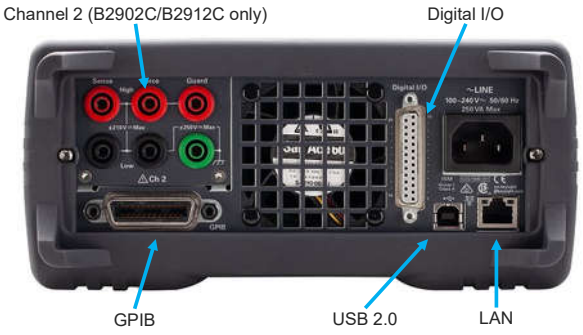

Program, software and drivers

Programming	SCPI
Program memory	100 kB (2500 lines typical)
LXI compliance	LXI Core 2011
Software available	EasyEXPERT group+, PW9251A PathWave IV Curve Software, Graphical Web Interface, PathWave BenchVue
Drivers available	IVI-C, IVI-COM drivers, LabVIEW drivers

Software prerequisites

EasyEXPERTgroup+	Operating system	Microsoft Windows 8.1 Professional or later (32bit/64bit), Microsoft Windows 10 Pro or later (32bit/64bit)
	Supporting language	English (US)
	.NET Framework	Microsoft .NET, Framework 3.5 SP1
	IO Libraries	Keysight IO Libraries Suite 17.1 update 1 or later (for the Online execution mode)
	Memory	2 GB memory
	Display	XGA 1024 x 768 (SXGA 1280 x 1024 recommended)
	HDD	Installation: 1 GB free disk space on the C drive, Test setup/result data storage: Free disk space more than 30GB is recommended
	Recommended GPIB I/F	Keysight 82350B/C (PCI) [1] , 82351B(PCIe) [1]
		82357A (USB) [2, 3] , 82357B (USB) [2, 3]
		National Instrument: GPIB-USB-HS (USB) [1, 2]
PW9251A PathWave IV Curve Software	Operating system	Windows 10 (64 bit),
	Processor	Intel Core i5 (or equivalent)
	RAM	8 GB
	Storage Drive	900 MB free space for Windows
	Display resolution	1920 x 1080 minimum
	Interfaces	USB, GPIB, LAN
PathWave BenchVue	Operating system	Windows 10 32-bit and 64-bit (Professional, Enterprise, Education, Home versions)
		Windows 8 32-bit and 64-bit (Professional, Enterprise, Core)
	HDD	Processor: 1 GHz or faster (2 GHz or greater recommended)
		RAM: 1 GB (32-bit) or 2 GB (64-bit) (3 GB or greater recommended)
	Display resolution	1024 x 768 minimum for single instrument view (higher resolutions are recommended for multiple instrument view)
	Interfaces	USB, GPIB, LAN, RS-232

1. A PCI or PCIe card is highly recommended because of stability and speed.
2. USB GPIB interfaces might cause serial poll error intermittently due to the intrinsic communication scheme differences. It is reported that using an even GPIB address sometimes significantly decreases the chance of the error. The NI GPIB -USB-HS is recommended for stability, and the Keysight 82357x is recommended for speed.
3. EasyEXPERT software prohibits to set the odd GPIB address to prevent the issue above.

Furnished Accessories

Power cable, USB cable, Quick Reference (English)

Ordering Information

Model number

B2901CL	Precision source/measure unit, 1 ch, 1 pA resolution, 21 V, 1.5 A
B2910CL	Precision source/measure unit, 1 ch, 10 fA resolution, 210 V, 1.5 A
B2901C	Precision source/measure unit, 1 ch, 100 fA, 210 V, 3 A DC/10.5 A pulse
B2902C	Precision source/measure unit, 2 ch, 100 fA, 210 V, 3 A DC/10.5 A pulse
B2911C	Precision source/measure unit, 1 ch, 10 fA, 210 V, 3 A DC/10.5 A pulse
B2912C	Precision source/measure unit, 2 ch, 10 fA, 210 V, 3 A DC/10.5 A pulse

Options

1A7	Calibration + Uncertainties + Guardbanding (not accredited)
A6J	ANSI Z540-1-1994 calibration
UK6	Commercial calibration certificate with test data

Accessories

N1297A	Banana - Triax adapter for 2-wire (non-Kelvin) connection
N1297B	Banana - Triax adapter for 4-wire (Kelvin) connection
N1294A-011	Interlock cable for 16442B (1.5 m)
N1294A-012	Interlock cable for 16442B (3.0 m)
N1294A-031	GPIO-BNC trigger adapter
N1294A-032	Digital I/O trigger cable for multiple unit control
16494A-001	Low leakage triax cable (1.5 m)
16494A-002	Low leakage triax cable (3.0 m)
16494A-005	Low leakage triax cable (4.0 m)
1CM124A	Rack mount flange kit

Upgrade kit

B2901CLU	B2901CL Software Upgrade Package, Extension Support and Subscription
B2910CLU	B2910CL Software Upgrade Package, Extension Support and Subscription
B2901CU	B2901C Software Upgrade Package, Extension Support and Subscription
B2902CU	B2902C Software Upgrade Package, Extension Support and Subscription
B2911CU	B2911C Software Upgrade Package, Extension Support and Subscription
B2912CU	B2912C Software Upgrade Package, Extension Support and Subscription

Keysight enables innovators to push the boundaries of engineering by quickly solving design, emulation, and test challenges to create the best product experiences. Start your innovation journey at www.keysight.com.

KEYSIGHT

This information is subject to change without notice. © Keysight Technologies, 2025, Published in USA, January 28, 2025, 3125-1016.EN