Instruction Leaflet

Miniature pcb mounting hour meter

RS stock no. 331-512

Figure 1 Connection Details (pin view)

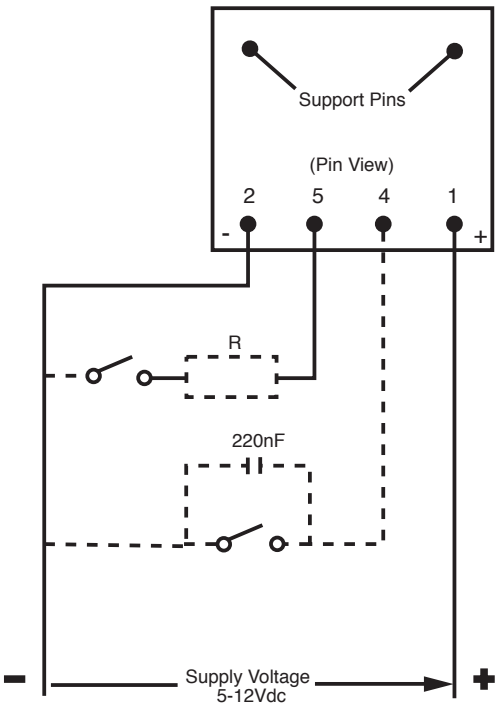

Pin 4 - Inhibit and Short Time Storage

Pin 5 - Impulse Count Input

Supply Voltage Connections

The Hour meter can be connected directly to a dc supply (5-12V ± 10%). Connection to a higher supply voltages is possible using a zener diode of the correct voltage (see figure 2) eg 15V Zener (RS stock no. 282-195) for 24V supply

Figure 2 Connection to dc supply voltage > 12V

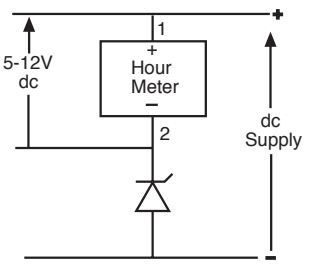

Operation

1. Normal Mode

When supply voltage is applied an internal electronic circuit generates a pulse every 36 s (0.01h) to advance the $\frac{1}{100}$ h digit wheel (providing pins 4 and 5 are not connected to pin 2).

Note: If the supply voltage is disconnected the time interval since the last pulse ie up to 36 s will not be metered.

2. Accurate Time Metering

To avoid the loss of up to 36 s during every ON/OFF cycle - see (1) - an 'Inhibit' facility can be used. When 'Inhibit' pin 4 is disconnected from pin 2 normal metering is as (1) above. If pin 4 (see figure 1) is now connected to pin 2 (via a voltage free switch) metering is inhibited but the time value between the 'Inhibit' application and the last reading increment pulse is stored internally. If the connection between pins 4 and 2 is then broken, metering is enabled again and the first incremental pulse will occur when the total time since the last pulse excluding the 'Inhibit' time add up to 36 s (see figure 3).

Note: When the 'Inhibit' facility is used a 220nF capacitator is recommended between pins 2 and 4.

Figure 3 Inhibit facility for accurate time metering

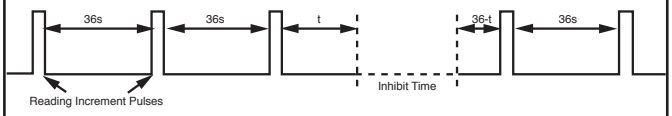

3. Count Increment Facility

The Hour meter reading may be incremented by 0.01 h if pin 5 is connected to pin 2 (see figure 1) providing supply voltage is applied. This procedure can be repeated as often as necessary (max. frequency 10Hz, min. pause or pulse time 50ms). The Impulse facility can be used regardless of the inhibit state.

Important

1. When the Impulse facility is used the counter is continuously rated for supply voltages not greater than 5.5Vdc. Thus for safety reasons, if the supply voltage is greater than 5V, a resistor R (see figure 1) is required in series with the Impulse switch to limit the current consumption in the coil to approximately 40mA.

$$\text{R value is} \leq \frac{\text{Supply Voltage - 4*}}{0.04} \text{ ohm}$$

* This is approximately the voltage across the coil inside the meter when 40mA is flowing through it.

2. While pin 5 is connected to pin 2, any internally generated pulses will not increment the counter reading as the coil will be continuously energised.

Technical Specification

Supply voltage	5-12Vdc ± 10%
Supply ripple	less than 5%
Current consumption	
average	2mA
maximum*	25mA (except when impulse is used - see 'operation')
Temperature range	-10°C to + 60°C
Protection	IP65

*25mA pulse every 36 s (pulse width 31 ms)

The information provided in RS technical literature is believed to be accurate and reliable; however, RS Components assumes no responsibility for inaccuracies or omissions, or for the use of this information, and all use of such information shall be entirely at the user's own risk.
No responsibility is assumed by RS Components for any infringements of patents or other rights of third parties which may result from its use.
Specifications shown in RS Components technical literature are subject to change without notice.

© RS Components 1997