Product datasheet
Characteristics

XCKJ390511H29EX
limit switch XCKJ - roller lever - 2NC + NO - ATEX/IECEx



Main

Range of product	OsiSense ATEX D
Series name	Standard format
Product or component type	Limit switch
Device short name	XCKJ
Sensor design	Form A conforming to CENELEC EN 50041
Body type	Fixed
Head type	Rotary head
Material	Metal
Fixing mode	By the body
Movement of operating head	Rotary
Type of operator	Spring return roller lever thermoplastic
Switch actuation	By 30° cam
Type of approach	Lateral approach, 1 or 2 programmable direction
Electrical connection	Screw-clamp terminals, clamping capacity: 1 x 0.34...2 x 0.75 mm²
Cable entry number	1 tapped entry for M20 x 1.5 cable gland (included) 9…12 mm
Number of poles	3
Contacts type and composition	2 NC + 1 NO
Contacts insulation form	Zb
Contact operation	Snap action
Number of steps	1
Positive opening	With
Minimum torque for tripping	0.25 N.m
Maximum actuation speed	1.5 m/s
IP degree of protection	IP66 conforming to IEC 60529

Disclaimer: This documentation is not intended as a substitute for and is not to be used for determining suitability or reliability of these products for specific user applications

Complementary

Body material	Zamak
Head material	Zamak
Positive opening minimum torque	0.5 N.m
Minimum actuation speed	0.01 m/min
Contact code designation	B300, AC-15 (Ue = 240 V), Ie = 1.5 A conforming to EN 60947-5-1 B300, AC-15 (Ue = 240 V), Ie = 1.5 A conforming to IEC 60947-5-1 appendix A R300, DC-13 (Ue = 250 V), Ie = 0.1 A conforming to EN 60947-5-1 R300, DC-13 (Ue = 250 V), Ie = 0.1 A conforming to IEC 60947-5-1 appendix A
[Ithe] conventional enclosed thermal current	6 A AC
[Ui] rated insulation voltage	300 V conforming to UL 508 400 V (pollution degree 3) conforming to IEC 60947-1 300 V conforming to CSA C22.2 No 14
Maximum resistance across terminals	25 MOhm conforming to IEC 60255-7 category 3
[Uimp] rated impulse withstand voltage	4 kV IEC 60664 4 kV IEC 60947-1
Short-circuit protection	6 A cartridge fuse, type gG
Electrical durability	5000000 cycles, DC-13, inductive load type, 120 V, 4 W, operating rate <3600 cyc/mn, load factor: 0.5, DC conforming to IEC 60947-5-1 appendix C 5000000 cycles, DC-13, inductive load type, 24 V, 3 W, operating rate <3600 cyc/mn, load factor: 0.5, DC conforming to IEC 60947-5-1 appendix C 5000000 cycles, DC-13, inductive load type, 48 V, 2 W, operating rate <3600 cyc/mn, load factor: 0.5, DC conforming to IEC 60947-5-1 appendix C
Mechanical durability	30000000 cycles
Marking	II2 D-Ex tb IIIC T85°C Db IP66/67
Width	40 mm
Height	77 mm
Depth	44 mm

Environment

Shock resistance	50 gn for 11 ms conforming to IEC 60068-2-27
Vibration resistance	25 gn (f= 10…500 Hz) conforming to IEC 60068-2-6
Electrical shock protection class	Class I conforming to IEC 61140 Class I conforming to NF C 20-030
Ambient air temperature for operation	-20…60 °C
Protective treatment	TC
Dust zone	Zone 21 - 22
Product certifications	INERIS 04ATEX0014X IEC-Ex INE 17.0020X
Standards	EN/IEC 60079-31 EN/IEC 60079-0
Directives	2014/34/EU - ATEX directive

Packing Units

Package 1 Weight	518 g
Package 2 Weight	6.824 kg

Offer Sustainability

Sustainable offer status	Green Premium product
REACh Regulation	REACh Declaration
EU RoHS Directive	Pro-active compliance (Product out of EU RoHS legal scope) EU RoHS Declaration
Mercury free	Yes
RoHS exemption information	Yes

Environmental Disclosure	Product Environmental Profile

Contractual warranty

Warranty	18 months

XCKJ390511H29EX

Dimensions

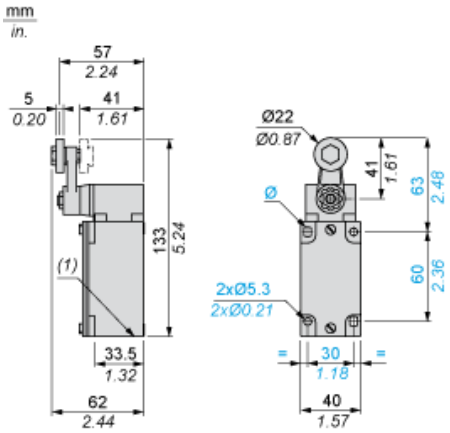

(1) 1 tapped entry M20 x 1.5

Mounting with Cable Entry

Position of Cable Gland

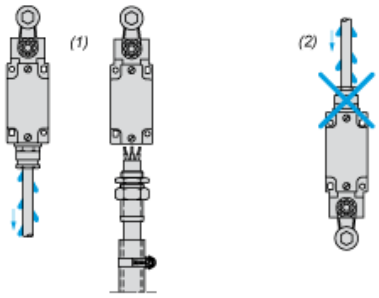

(1) Recommended
(2) To be avoided

Mounting with Rotary Heads and Levers

Type of Cam

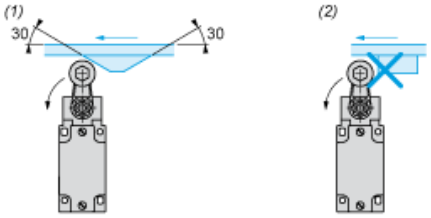

(1) Recommended
(2) To be avoided

Setting-up with Lever Head

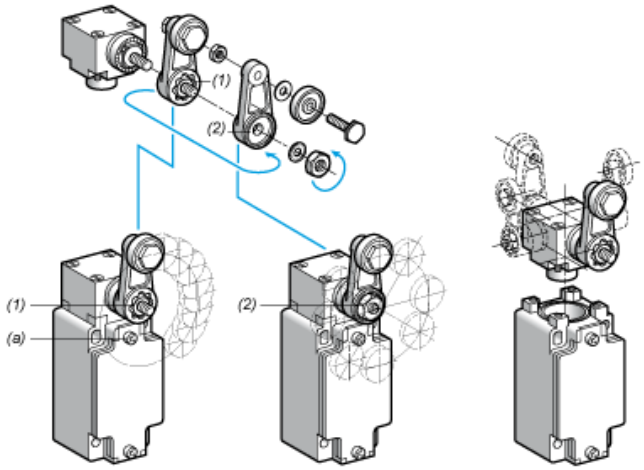

(1) 5° steps throughout 360° / Tightening torque (Min : 1) (Max : 1.5)
(2) 45° steps throughout 360° / Tightening torque (Min : 1) (Max : 1.5)
(a) Tightening torque (Min : 1) (Max : 1.5)

Setting-up with Head ZCKE05

Direction of Actuation Programming

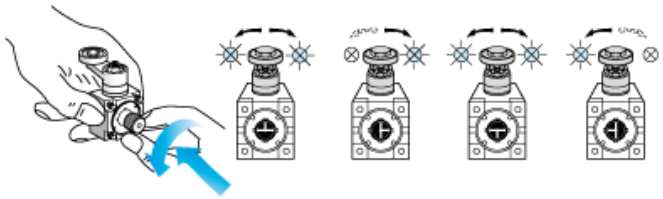

Wiring Diagram

3-pole NC + NC + NO Snap Action

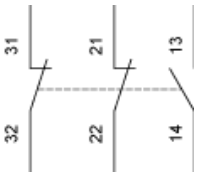

Characteristics of Actuation

Switch Actuation on End

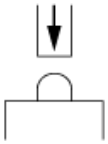

Functionnal Diagram

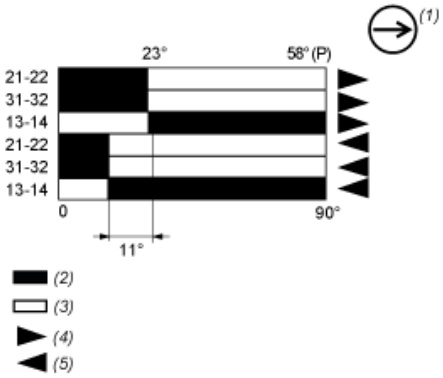

(P) Positive opening point
(1) NC contact with positive opening operation
(2) Closed
(3) Open
(4) Tripping
(5) Resetting