GSH-A (from 1800 up to 8300 mm)

HALL-EFFECT WIRE LINEAR POSITION TRANSDUCER WITH SINGLE AXIS TILT ANGLE MEASUREMENT



***Contactless** linear sensor - HALL EFFECT technology - with embedded single-axis MEMS inclinometer (i.e. single axis Z).*

*Excellent performance, high IP rating, shock and vibration resistance guarantee **sensor performance** in typical mobile hydraulic applications, wherever there's the need to monitor a linear position and a tilt angle at the same time.*

*The **compact design** - with only 65mm height - and the **CANopen signal output** as well as the **full redundant circuit**, both for the linear position and for the tilt angle measurements, make such a sensor a state-ot-the-art multivariable transducer.*

TECHNICAL SPECIFICATIONS

Measurement Range (FS)

strokes 1800mm - 2300mm - 3300mm - 4300mm - 4800mm - 5300mm - 6300mm - 7300mm - 8000mm - 8300mm

Supply voltage

+10...36 V DC

Output signal

CANopen

Electrical connections

M12 connector output, cable output

Linearity factory verification@ 25°C

< ± 0.5% FS – linear position
< ± 0.5% FS – tilt angle

Long term repeatability (linear position)

< ±3% FS (for 1800mm, 2300mm, 3300 mm)
< ±2% FS (for 4300mm, 4800 mm, 5300 mm, 6300 mm, 7300 mm, 8000 mm, 8300 mm)

Resolution

0.1 mm – linear position
0.1 deg – tilt angle

Working temperature

-40°C...+85°C

Vibrations

20*g* between 10 Hz … 2000 Hz according to IEC 60068-2-6

Shock

Pulse on 3 axes; 50*g* 11 ms according to IEC 60068-2-27

Electromagnetic compatibility

2014/30/EU Electromagnetic Compatibility (EMC)

Life cycles

max 500.000, max speed 1m/s acc. max 0.5*g*;
250.000, max speed 2 m/s acc. max 1*g*

Typical speed

max 2m/s, typical 1m/s

Typical acceleration

1*g*

IP Protection Level

IP67 with female homologated connector mounted, tightening torque 0.6Nm + low strength threadlocker (M12 connector version)
IP67 (cable-PUR version)

Constructive material of transducer body and wire

Transducer: PBT
Wire: AISI316 stainless steel, Ø 0.85 mm nylon coating

MECHANICAL DIMENSIONS - SINGLE/REDUNDANT - M12 1x VERSION

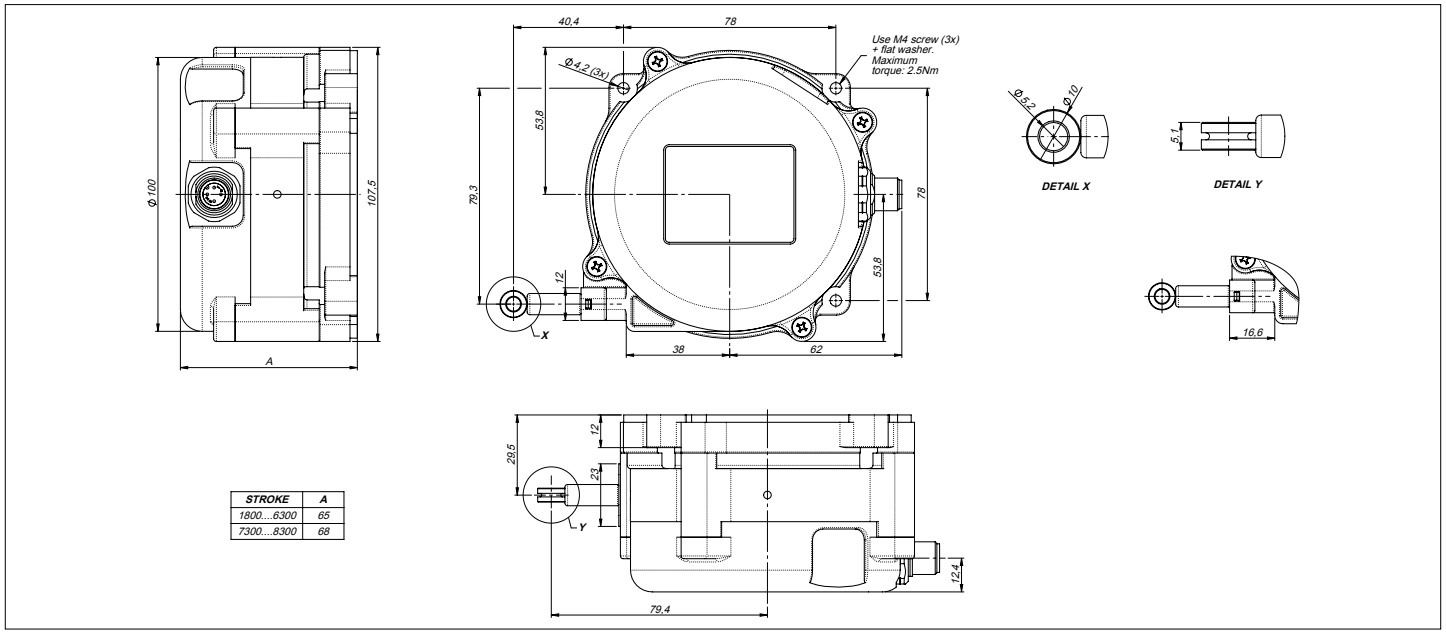

STROKE	A
1800....6300	65
7300....8300	68

MECHANICAL DIMENSIONS - REDUNDANT - M12 2x VERSION

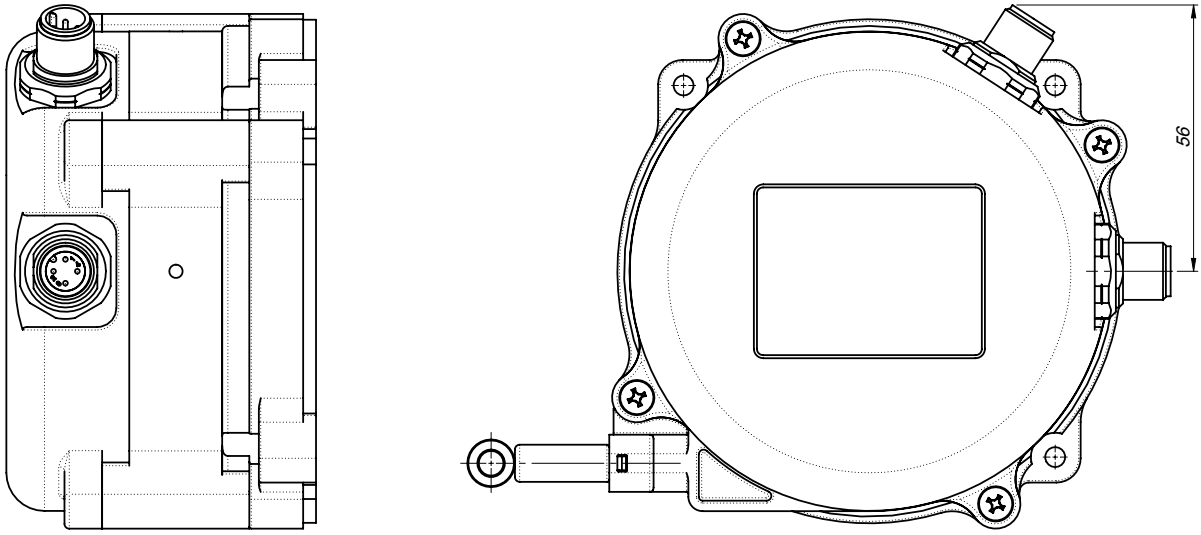

FIXING FLANGES (optional accessories to order)

FIXING FLANGE MODEL A - FLA033 (optional)

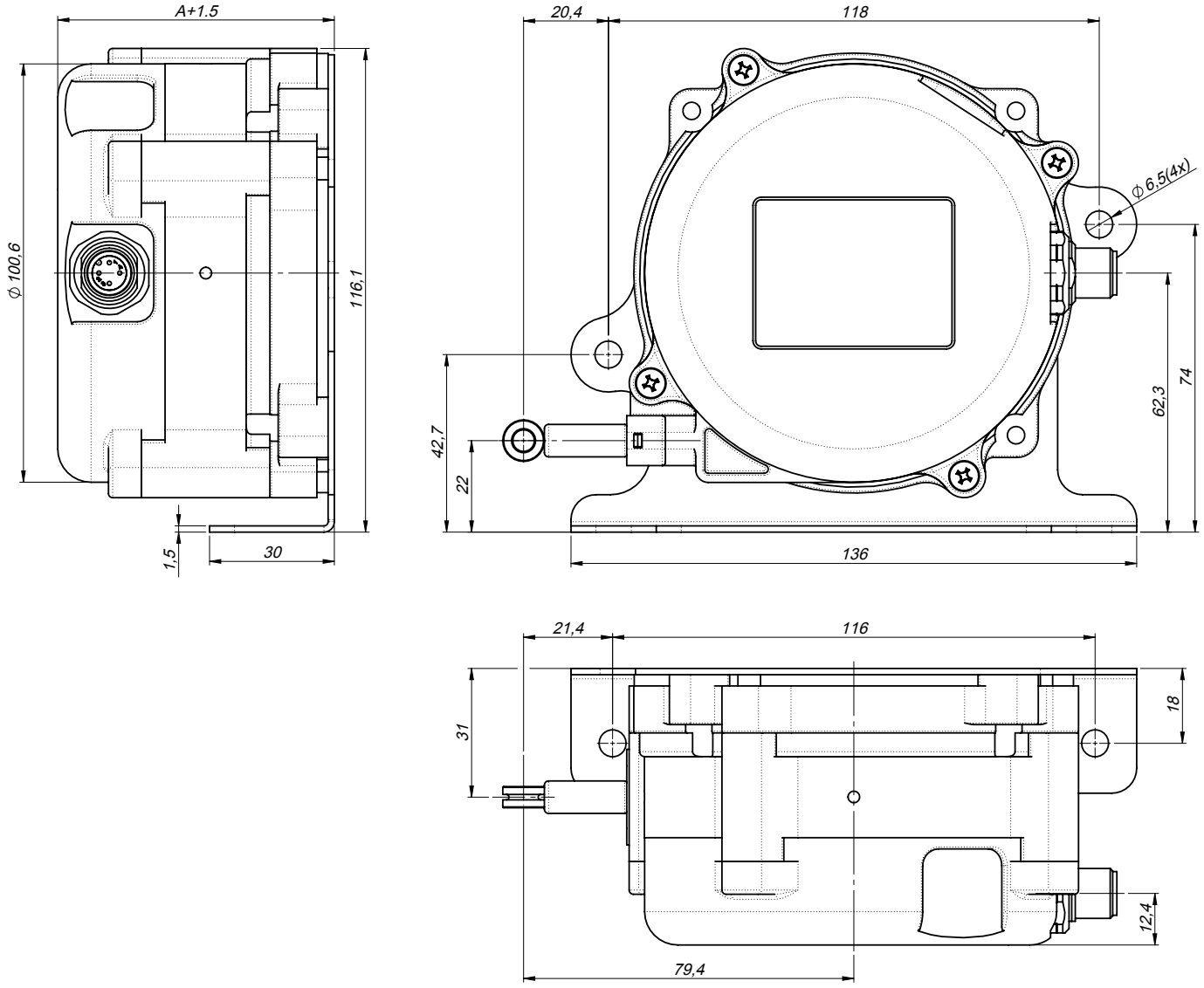

FIXING FLANGES (optional accessories to order)

FIXING FLANGE MODEL B - FLA034 (optional)

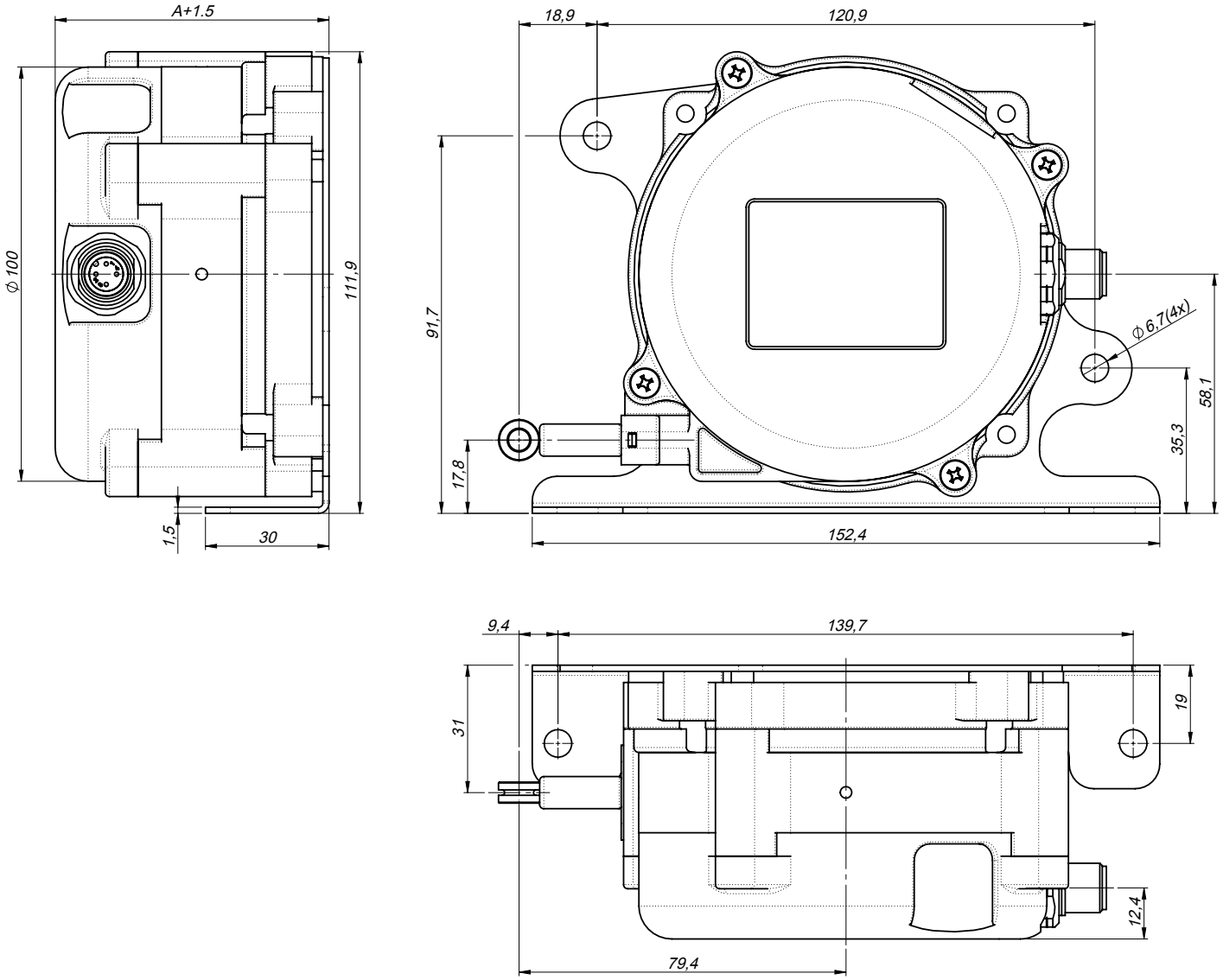

MECHANICAL DIMENSIONS - IN-OUT - M12 VERSION

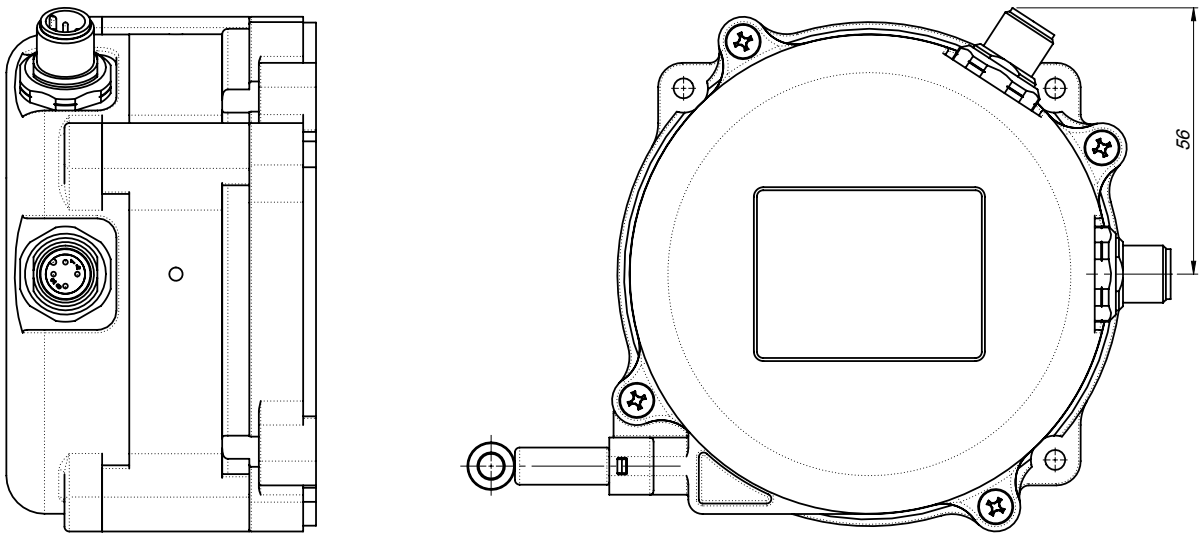

ELECTRICAL CONNECTIONS - M12 VERSION

SINGLE VERSION **N-1-S**
REDUNDANT VERSION **N-1-R N-2-R**

M12x1 5-pin male connector

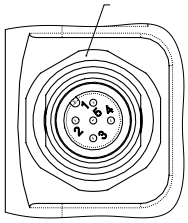

CAN CONNECTIONS
1. n.c.
2. +SUPPLY
3. GROUND
4. CAN-H
5. CAN-L

SINGLE VERSION **M-1-S**
REDUNDANT VERSION **M-1-R M-2-R**

M12x1 4 pin male connector

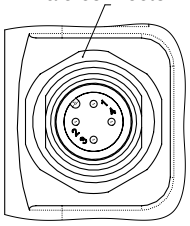

CAN CONNECTIONS
1. +SUPPLY
2. GROUND
3. CAN-H
4. CAN-L

REDUNDANT VERSION **O-1-R**

M12x1 8-pin male connector

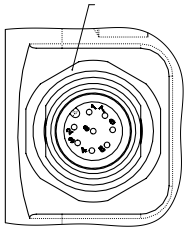

CAN CONNECTIONS
1. + SUPPLY CH1
2. GROUND CH1
3. CAN-H CH1
4. CAN-L CH1
5. + SUPPLY CH2
6. GROUND CH2
7. CAN-H CH2
8. CAN-L CH2

SINGLE/REDUNDANT/HALF-REDUNDANT IN-OUT VERSION **N-3-(S/R/H)**

M12x1 5-pin female connector

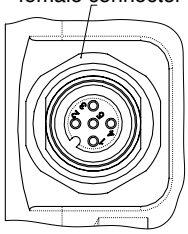

CAN CONNECTIONS
1. GROUND
2. +SUPPLY
3. GROUND
4. CAN-H
5. CAN-L

M12x1 5-pin male connector

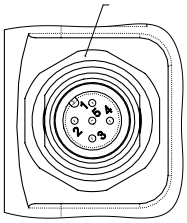

CAN CONNECTIONS
1. GROUND
2. +SUPPLY
3. GROUND
4. CAN-H
5. CAN-L

VIEW FROM N

ITEMS MARKED “n.c.” MUST NOT BE CONNECTED

MECHANICAL DIMENSIONS - SINGLE / REDUNDANT - CABLE VERSION

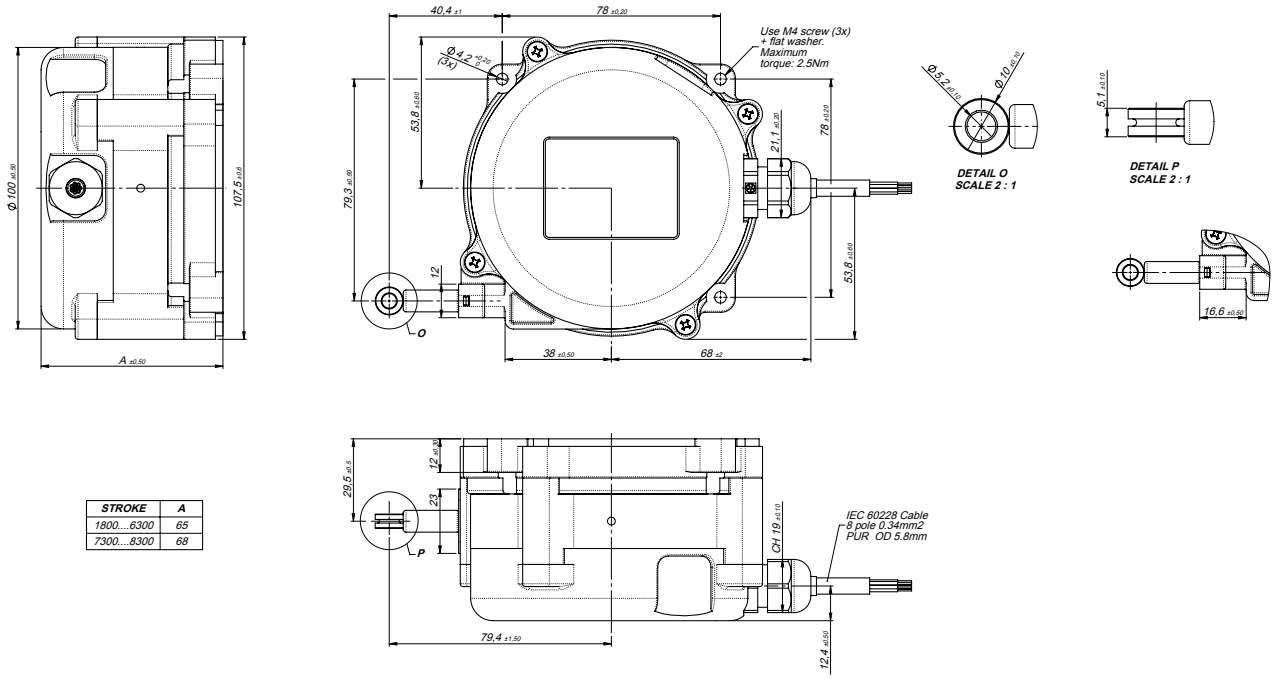

STROKE	A
1800....6300	65
7300....8300	68

MECHANICAL DIMENSIONS - REDUNDANT - 2x CABLE VERSION

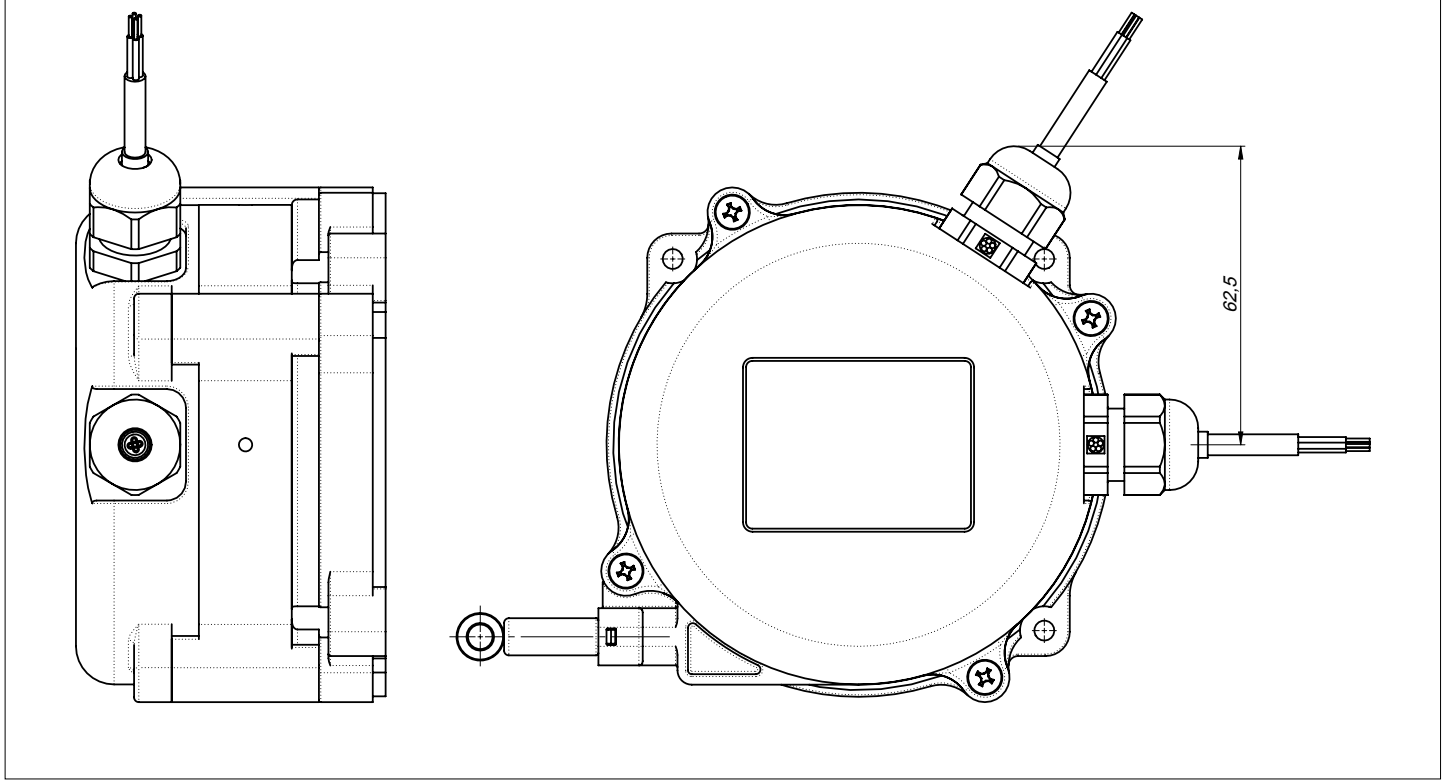

ELECTRICAL CONNECTION - CABLE VERSION

SINGLE VERSION F-S

IEC 60228 Cable
4 pole 0.34mm2
PUR OD 4.4mm

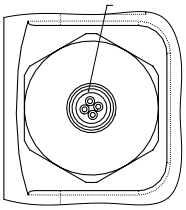

CAN CONNECTIONS

RED	+SUPPLY
BLACK	GROUND
BLUE	CAN-H
WHITE	CAN-L

REDUNDANT VERSION F-R

IEC 60228 Cable
8 pole 0.34mm2
PUR OD 5.8mm

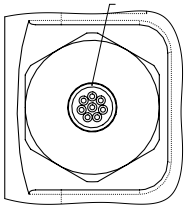

CAN CONNECTIONS

WHITE	+ SUPPLY CH1
BROWN	GROUND CH1
GREEN	CAN-H CH1
YELLOW	CAN-L CH1
GREY	+ SUPPLY CH2
PINK	GROUND CH2
BLUE	CAN-H CH2
RED	CAN-L CH2

FUNCTIONS: SENSOR OUTPUTS

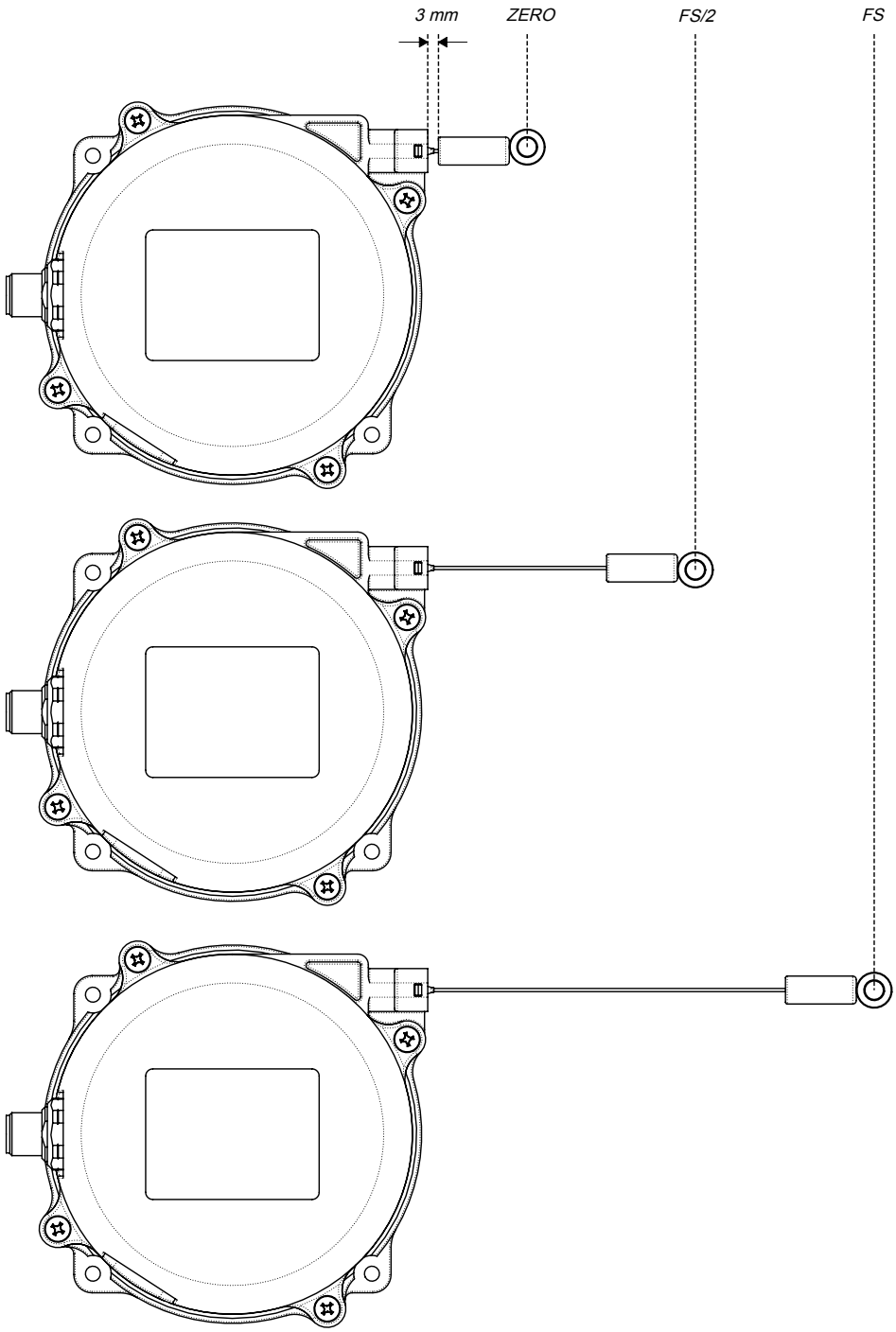

CH1	Digital code corresponding to 0 deg	Digital code corresponding to 270 deg	Digital code corresponding to 90 deg
CH2	Digital code corresponding to 0 deg	Digital code corresponding to 90 deg	Digital code corresponding to 270 deg
	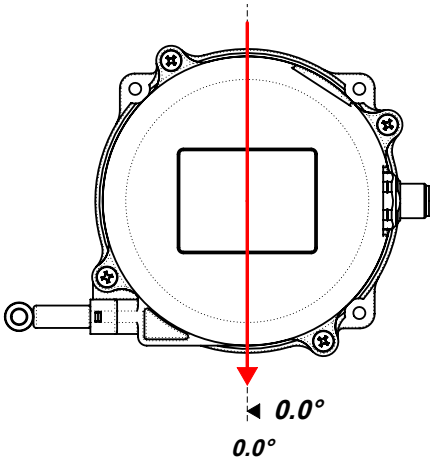	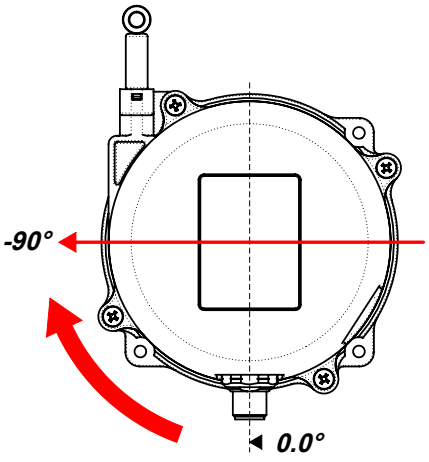	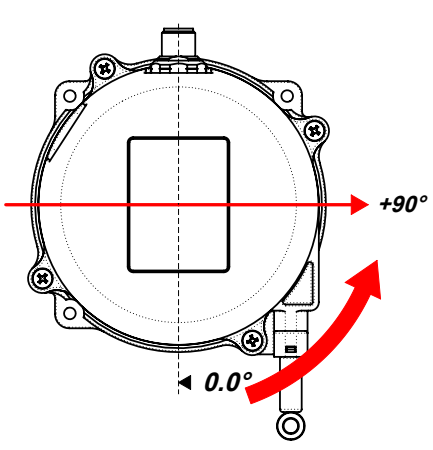

ORDERING CODE

GSH-A - Hall-effect wire linear position transducer with single axis tilt angle measurement

TRANSDUCER TYPE	
Hall-effect wire linear position transducer with single axis tilt angle measurement	**A**

ELECTRICAL CONNECTIONS	
M12 4P connector	**M**
M12 5P connector	**N**
M12 8P connector (only for redundant versions)	**O**
Cable output	**F**

CONNECTOR OPTIONS	
Cable output	**0**
1 male M12 4P connector (single or redundant version) or 1 male M12 5P connector (single or redundant version) or 1 male M12 8P connector (only redundant version)	**1**
2 male M12 5P connectors (only redundant version)	**2**
1 male M12 5P connector (CANopen IN) and 1 M12 5P female connector (CANopen OUT)	**3**

CIRCUIT TYPE	
Single	**S**
Redundant	**R**

MEASUREMENT RANGE	
measurement range (specify)	**XXXX**
available strokes: 1800mm-2300mm-3300mm-4300mm 4800mm-5300mm-6300mm-7300mm-8000mm-8300mm	

SUPPLY VOLTAGE	
+10...36 V DC	**H**

OUTPUT TYPE	
CANopen output	**C1**

CERTIFICATES	
0	No certificate attached

ACCESSORIES	
X	No accessories
A	FLA033: fixing flange, A version
B	FLA034: fixing flange, B version
C	CON293: 4-pin female mating connector M12x1; IP67 protection degree
D	CON469: 8-pin female mating connector M12x1; IP67 protection degree
E	CON031: 5-pin female mating connector M12x1; IP67 protection degree

CABLE LENGTH	
10	1 m cable
20	2 m cable
30	3 m cable
50	5 m cable
80	8 m cable
A0	10 m cable
.....	other lengths on request

Example of description: GSHAN1R8300HC1 0000X00

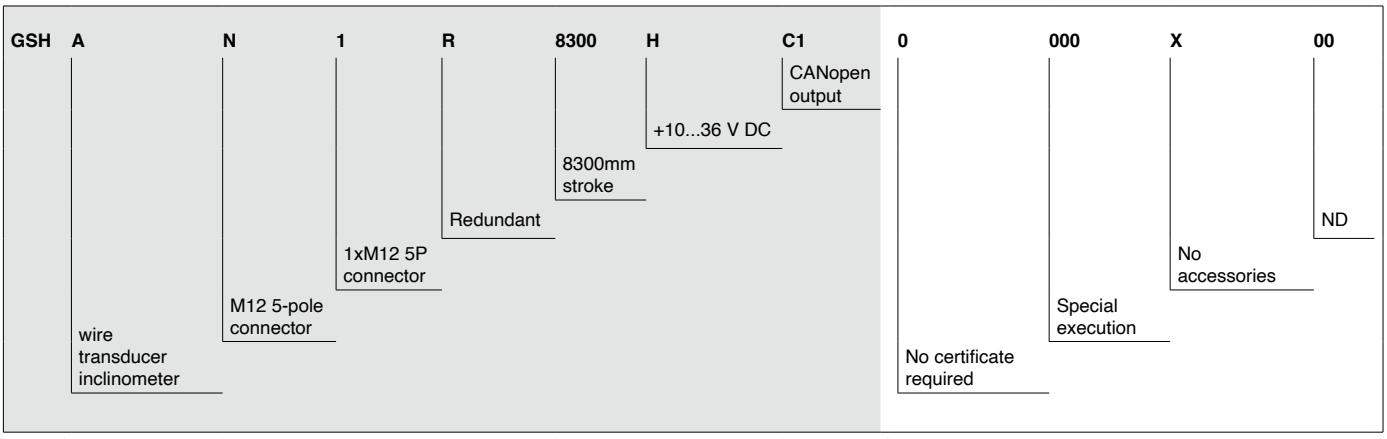

GEFRAN spa reserves the right to make any kind of design or functional modification at any moment without prior notice.

GEFRAN spa
via Sebina, 74
25050 PROVAGLIO D'ISEO (BS) - ITALIA
tel. 0309888.1 - fax. 0309839063
Internet: http://www.gefran.com