E33702

Process adapter Tri-Clamp

ADAPT IFM-CLAMP ISO2852 2"

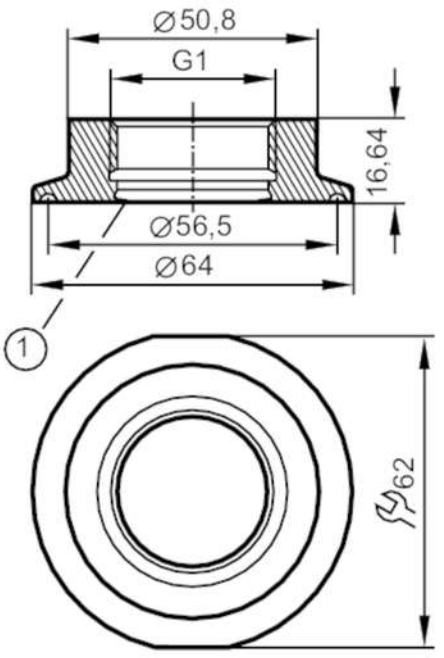

1 sealing edge

CRN EC 1935/2004 FCM FDA

Application		
Pressure rating	[bar]	16
MAWP (for applications according to CRN)	[bar]	16
Tests / approvals		
Pressure Equipment Directive		A possible classification to PED depends on the application and has to be carried out by the user / operator.
Pressure Equipment Directive EAC		The adapter is intended for use in devices, machines and installations that do not fall under the categories of the technical rule TR CU 032/2013.
Safety instructions		The compatibility between medium and product material has to be checked in all applications.
Mechanical data		
Weight	[g]	231
Materials (wetted parts)		stainless steel (1.4435 / 316L) ; surface characteristics : Ra<0,4 / Rz 4
Sensor connection		G 1 Aseptoflex Vario
Process connection		Clamp DN50 (2") DIN 32676 (ISO 2852)
Sealing		metal to metal
Hygienic equipment class to DIN 11866		H4
Remarks		
Pack quantity		1 pcs.