TWO HAND STATION JSTD25



JSTD25A



JSTD25B



JSTD25D



JSTD25E



JSTD25 F or H



JSTD25G,
example of customizing



JSTD25P-1
shown with holder

Technical data – JSTD25		
Manufacturer	JOKAB SAFETY AB, Sweden	
Ordering data	20-007-50	JSTD25A
	20-007-51	JSTD25B, with E-stop
	20-007-53	JSTD25D with ball- & socket mount
	20-007-54	JSTD25E, as D, and with E-stop
	20-007-60	JSTD25F, with 5-pole connector
	20-007-62	JSTD25G (customized)
	20-007-63	JSTD25H, with 8-pole connector
	20-007-65	JSTD25P-1, with internal Eva.
Material	Safeball: Polypropen. Housing: JSTD25 A/B/D/E painted steel, JSTD25 F/G/H/P-1 anodized aluminium. Gaskets: rubber.	
Size (Length x Width x Height)	JSTD25 A/B	400 x 110 x 125 mm
	JSTD25 D/E	400 x 110 x 156 mm
	JSTD25 F/H	356 x 91 x 129 mm
	JSTD25 G	Customized
	JSTD25 P-1	315 x 70 x 160 mm
Weight without cable	JSTD25 A/B/D/E	3,3 - 4,0 kg
	JSTD25 F/H	0,65 kg
	JSTD25 G	Customized
	JSTD25 P-1	0,85 kg
Colour	Black and yellow. JSTD25 F/G/H also anodized aluminium.	
Temperature	0…+55 °C (operation) -20…+70 °C (storage)	
Protection class	IP65	
Connection	JSTD25 A/B/D/E	Screw clamp terminals inside
	JSTD25 F	M12 5-pole male contact
	JSTD25 G	Cable or contact (customized)
	JSTD25 H	M12 8-pole male contact
	JSTD25 P-1	8+1 pole Zylin male contact
	Two-hand (Safeball)	Emergency stop push button
Operating force	Approx. 2 N	40 N
Actuator travel	1.3 ±0.6 mm	5 mm
Mechanical life	$1x10^6$ operations	$3x10^5$ operations
Max operating frequency	1 Hz	0,3 Hz
Isolation voltage	1000 V rms	690 V rms
Max switching load	30 V 2 A DC resistive load	240 V 3 A AC
Recommended load	24 V 10 mA DC	24 V 20 mA DC
Contact resistance	100 mohm	20 mohm
Contact type	Spring loaded snap-action. 2 NO, 2 NC. True Two-channel.	Direct opening, separated contact blocks. 2 NC.
Safety level (if used with corresponding safety unit from Jokab Safety)	Type IIIC acc. to EN574 (=highest level)	Cat. 4 acc. to EN 954-1 (=highest level)
Accessories (see also product catalog)	JSTS 31	Floor stand with ring for JSTD25 A/B/D/E
	JSM C7	Holder/shelf for JSTD25 F/G/H
	JSM C14	Holder/shelf for JSTD25P-1
	M12-C101	10m cable for JSTD25F
	M12-C103	10m cable for JSTD25H
	JSTK40S	4m spiral cable for JSTD25P-1
	JSTK80S	8m spiral cable for JSTD25P-1
Standards	EN 574, EN ISO 13849-1, EN ISO13850, EN 60947-1, EN 60947-5-1, EN 999, IEC 60529	

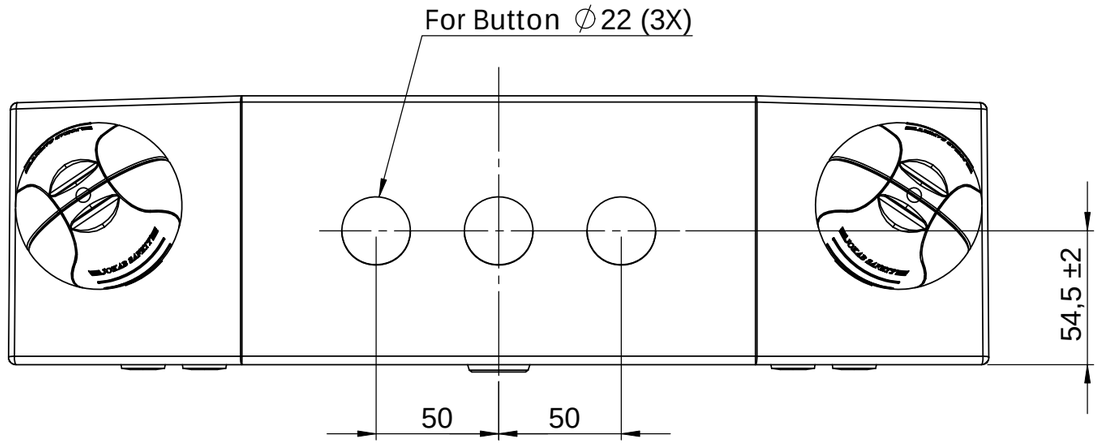



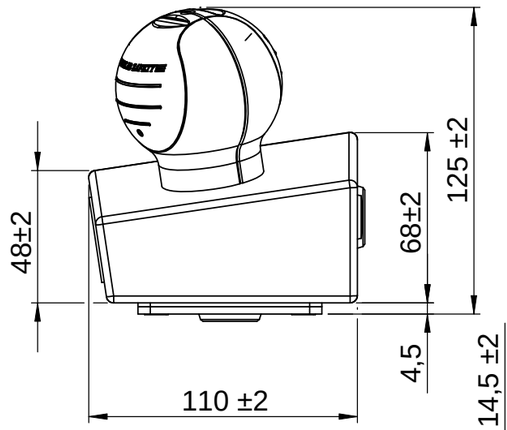

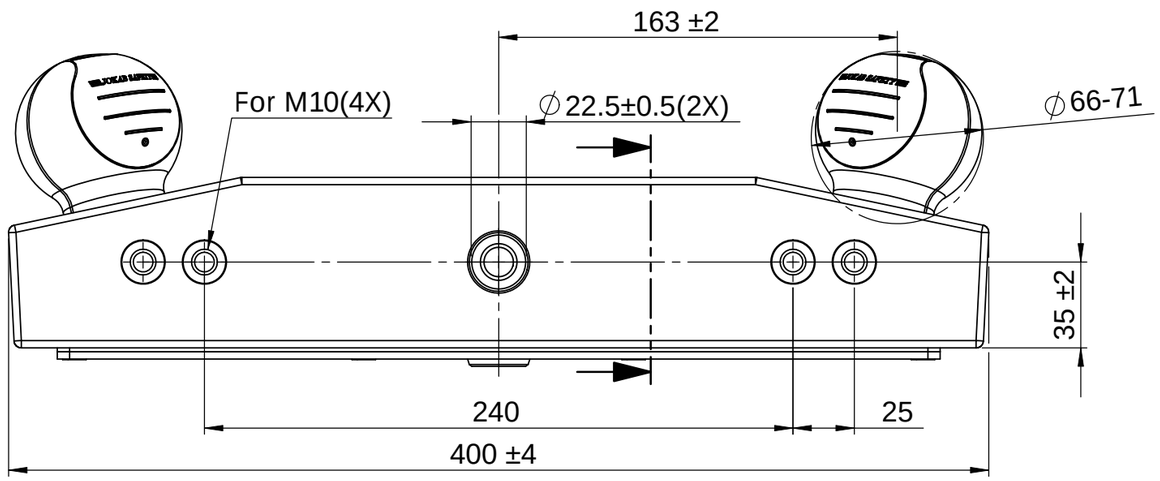

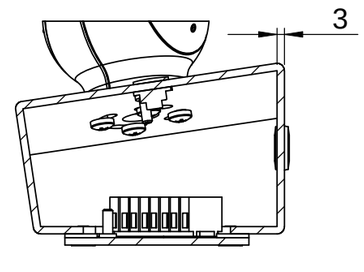

Section showing provision for connection and earth screws.

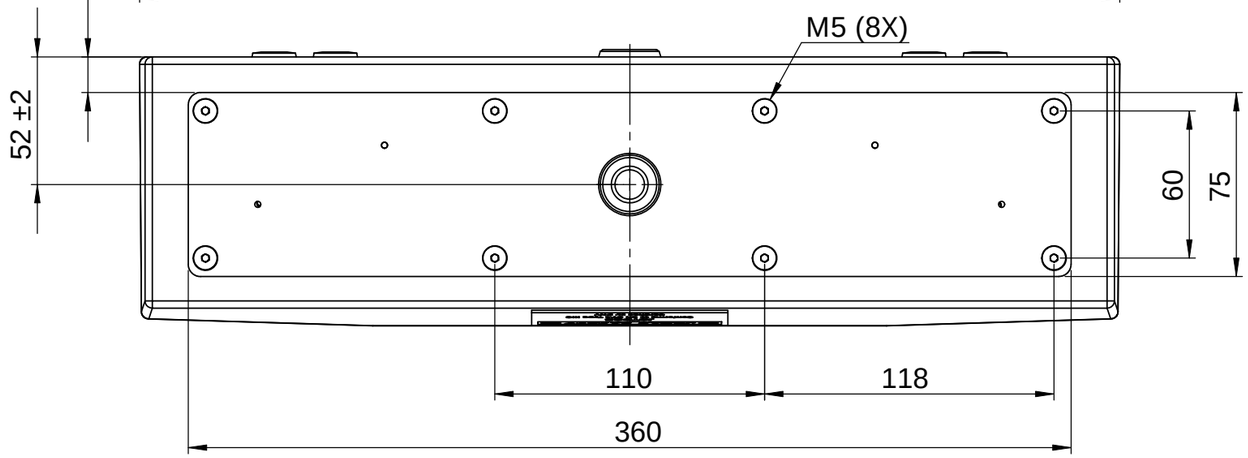

TOLERANCE UNLESS OTHER STATED: ±1MM

Material	Ytbehandling		Dimension	Färg	Generell tolerans		
STEEL	POWDER PAINTED			BLACK	±1 mm		
Konstruerad av	Granskad av	Godkänd av	Datum	Generell ytjämnhet	Vyplacering	Format	Skala
MB	-	-	061019	Ra -		A3	1:2.5

Ägare	Titel/benämning		
JOKAB SAFETY	TWOHAND STATION		
	Ritningsnummer	Utgåva	Blad
	JSTD25A	-	1/1

This document shall not be copied without our written permission, and the contents thereof shall not be disclosed to any third party, nor be use for anyauthorized purpose.

Subject to change without notice.

COPYRIGHT JOKAB SAFETY AB - 2004

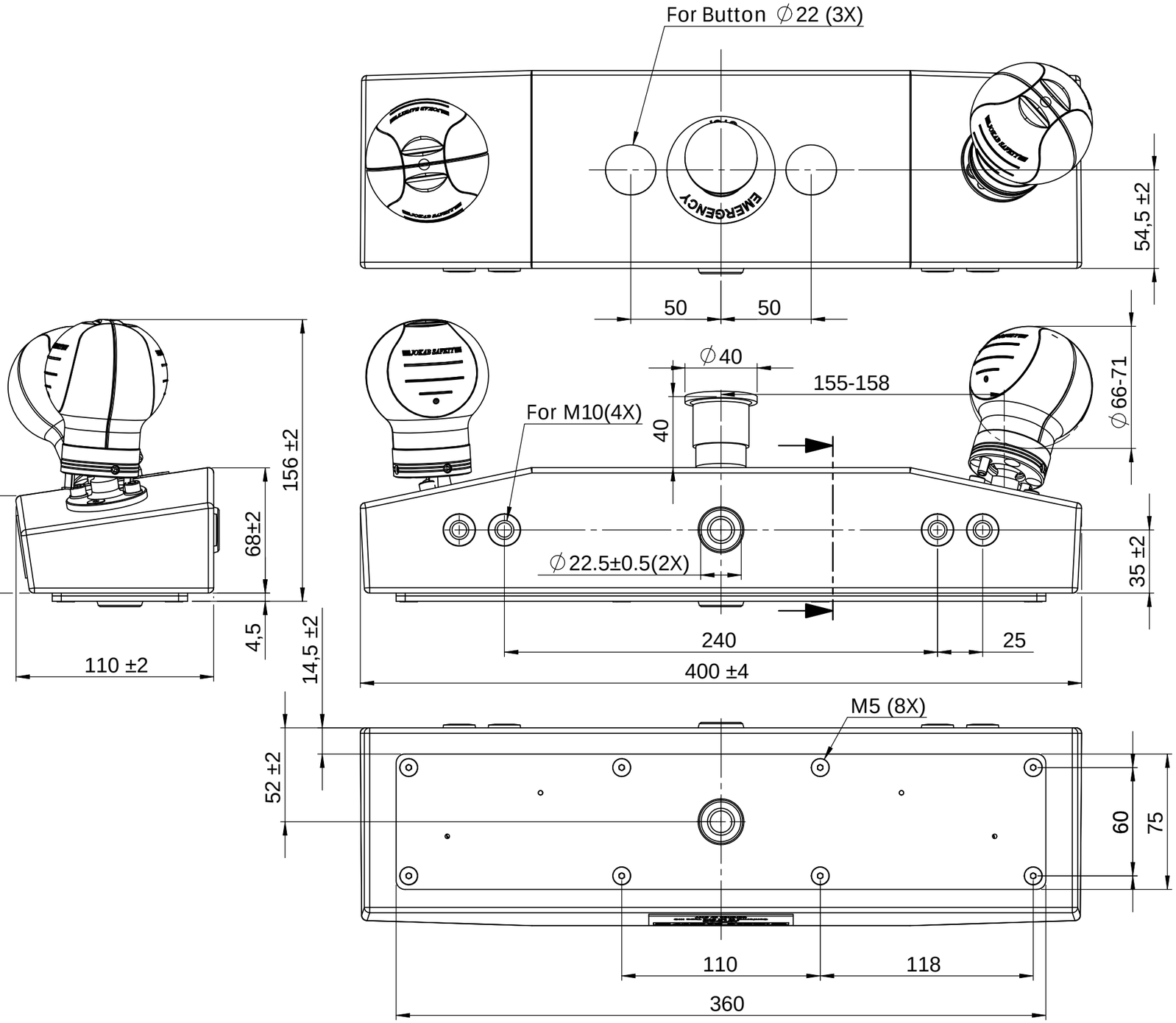

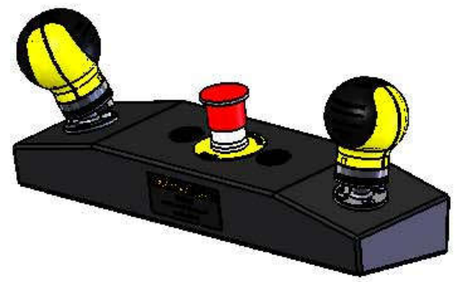

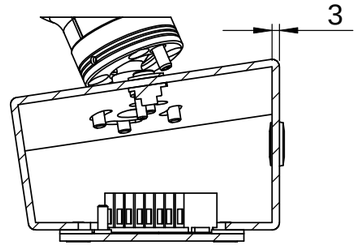

Section showing provision for connection and earth screws.

TOLERANCE UNLESS OTHER STATED: ±1MM

Material	Ytbehandling		Dimension	Färg	Generell tolerans		
STEEL	POWDER PAINTED			BLACK	±1 mm		
Konstruerad av	Granskad av	Godkänd av	Datum	Generell ytjämnhet	Vyplacering	Format	Skala
MB	-	-	061019	Ra -		A3	1:2.5

Ägare	Titel/benämning		
JOKAB SAFETY	TWOHAND STATION		
COPYRIGHT JOKAB SAFETY AB - 2004	Ritningsnummer	Utgåva	Blad
	JSTD25E	-	1/1

This document shall not be copied without our written permission, and the contents thereof shall not be disclosed to any third party, nor be use for anyauthorized purpose.

Subject to change without notice.

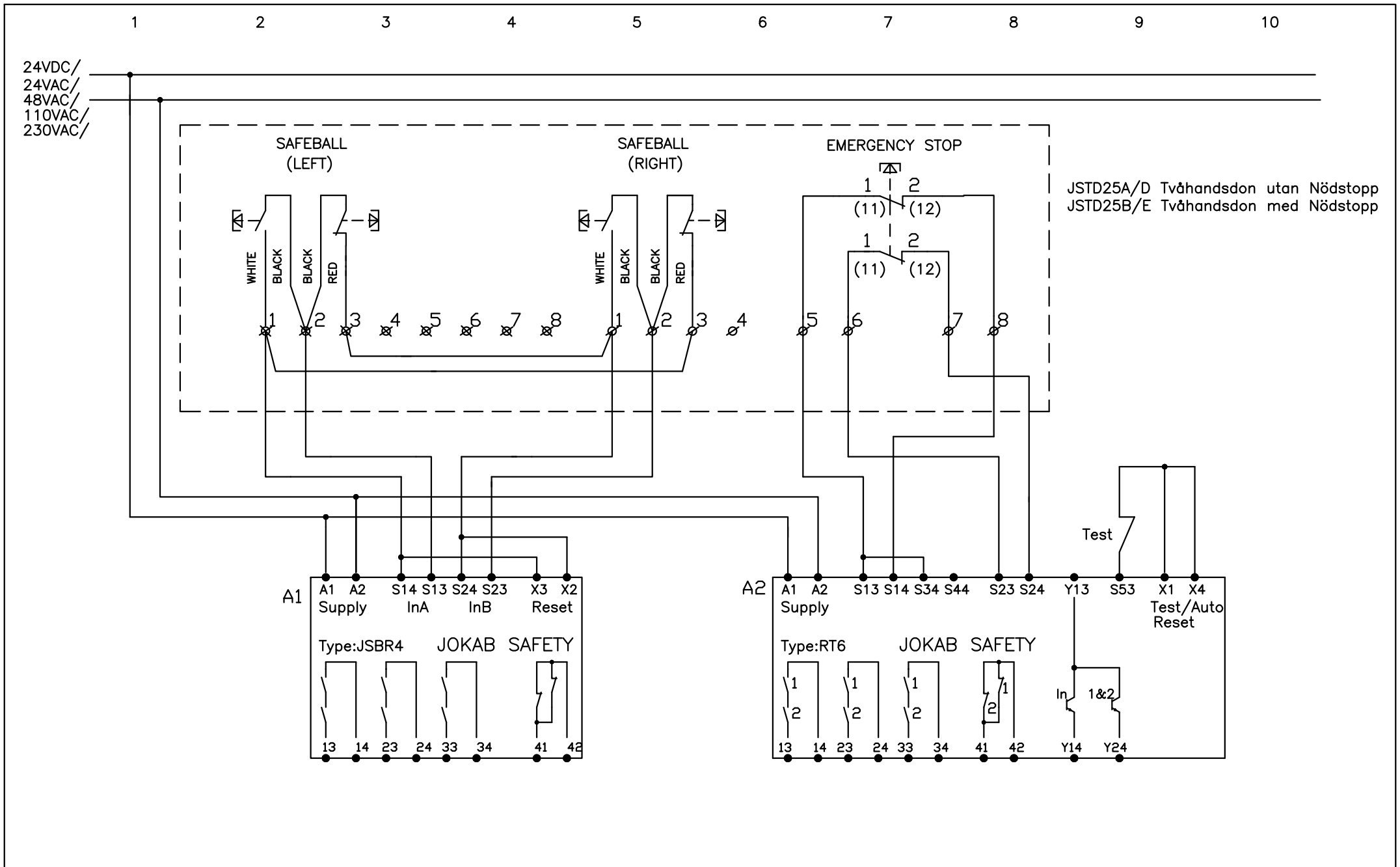

Anmärkning Remark		Konstr Design	Godk Appr	Datum Date	Blad Sheet
Inkopplingsexempel Tvåhandsdon Safeball JSTD25A, JSTD25B,JSTD25D och JSTD25E till JSBR4 Nödstopp Till RT6	JOKAB SAFETY	JS		010831	
		Ritad Drawn	Sidor Pages	Ritn nr Drawing no	Forts Cont
		JS		HT5400C	

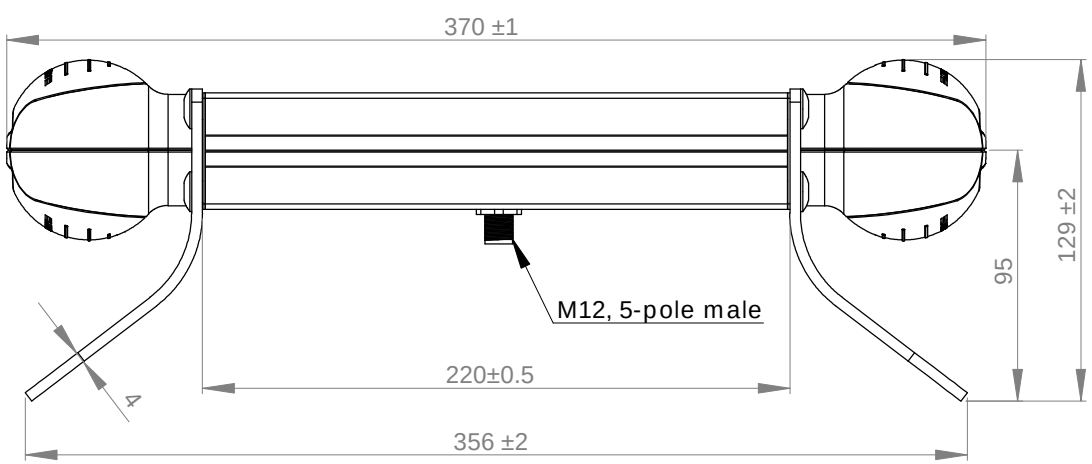

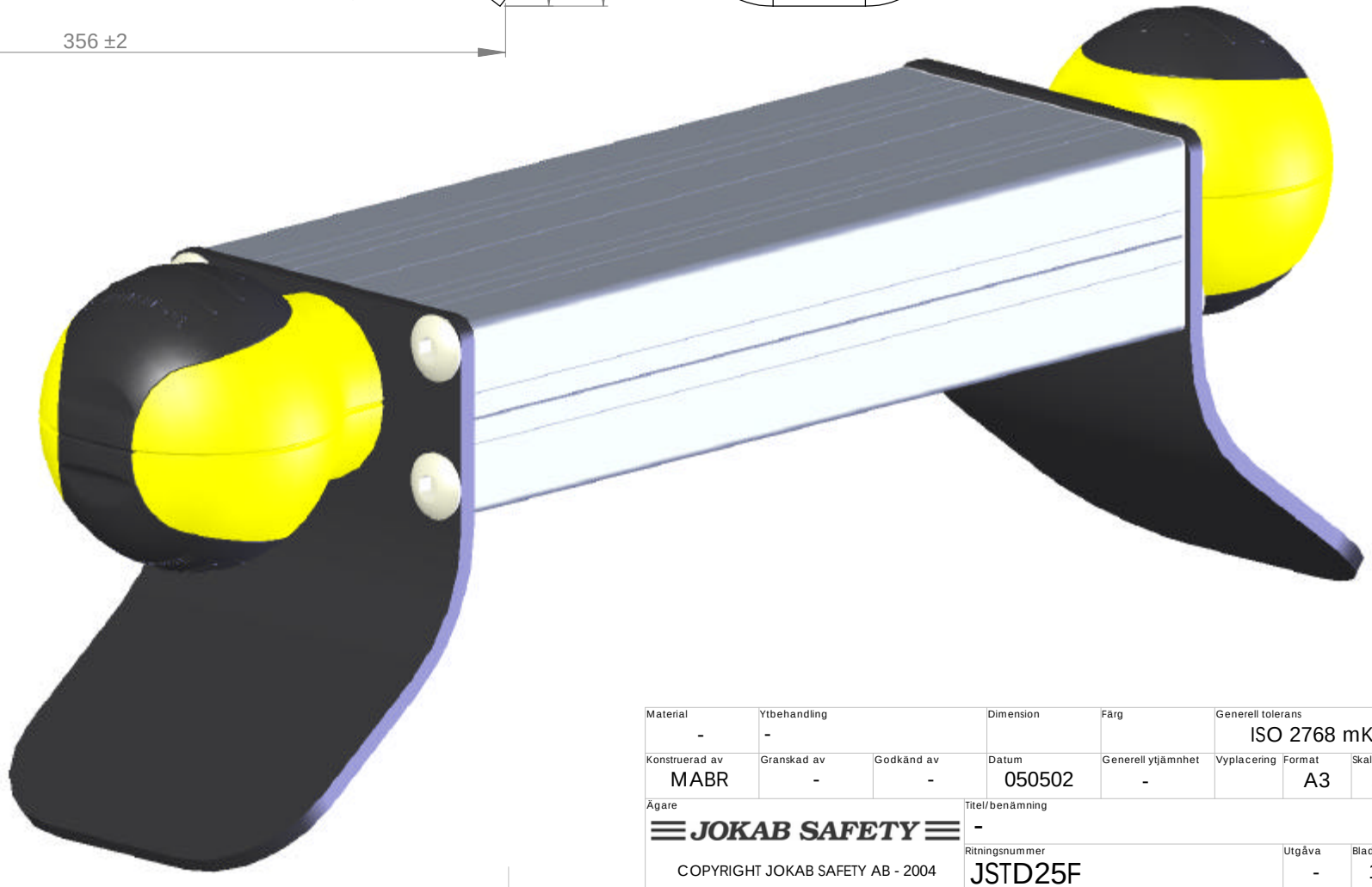

This document shall not be copied without our written permission, and the contents thereof shall not be disclosed to any third party, nor be use for anyauthorized purpose.

Material	Ytbehandling		Dimension	Färg	Generell tolerans		
-	-				ISO 2768 mK		
Konstruerad av	**Granskad av**	**Godkänd av**	**Datum**	**Generell ytjämnhet**	**Vyplacering**	**Format**	**Skala**
MABR	-	-	050502	-		A3	1:1

Ägare	Titel/benämning		
JOKAB SAFETY	-		
COPYRIGHT JOKAB SAFETY AB - 2004	**Ritningsnummer**	**Utgåva**	**Blad**
	JSTD25F	-	1/2

1 2 3 4 5 6 7 8 9 10

JSTD25F

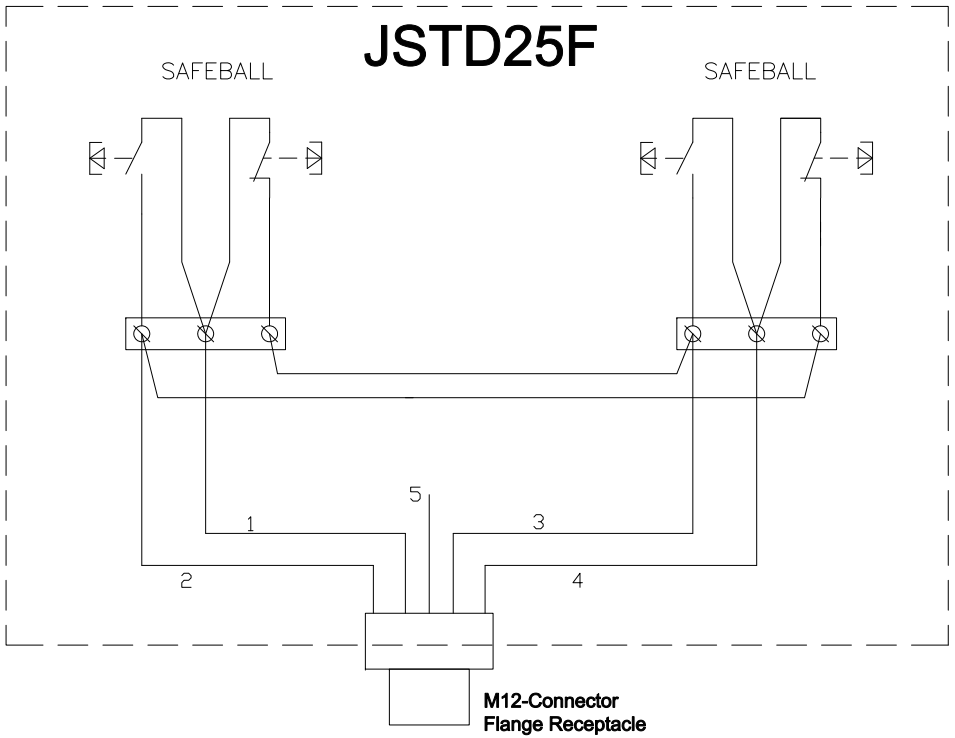

M12-Connector
Flange Receptacle
5-pole male

M12 5 Color-code
(not always used, verify!)
1 Brun Brown Braun Marron
2 Vit White Weiss Blanc
3 Blå Blue Blau Bleu
4 Svart Black Schwartz Noir
5 Not connected

JSBR4

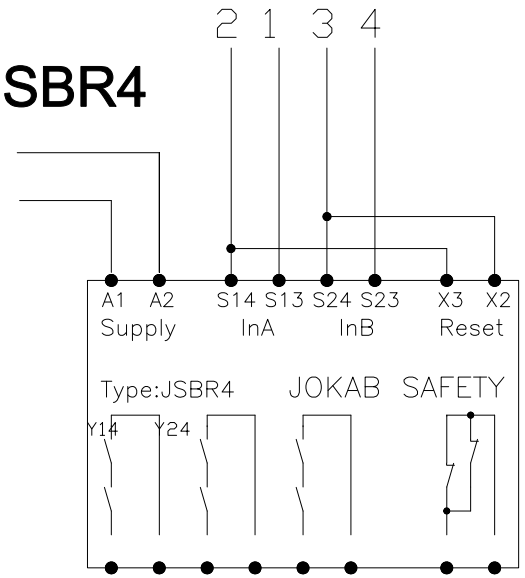

PLUTO

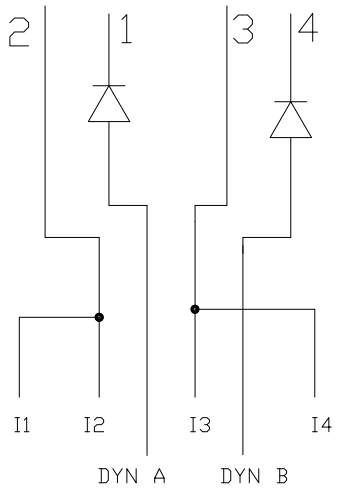

1 Dyn A out
2 Pluto to evaluate A = OK, and test B (two inputs)
3 Pluto to evaluate B = OK, and test A (two inputs)
4 Dyn B out

According to standard Pluto Twohand1 block:
I1: Right_NO
I2: Left_NC
I3: Right_NC
I4: Left_NO

Anmärkning Remark Anslutning Connection JSTD25F	JOKAB SAFETY	Konstr Design JS	Godk Appr	Datum Date 081121	Blad Sheet
		Ritad Drawn MB	Sidor Pages	Ritn nr Drawing no xxxxx	Forts Cont

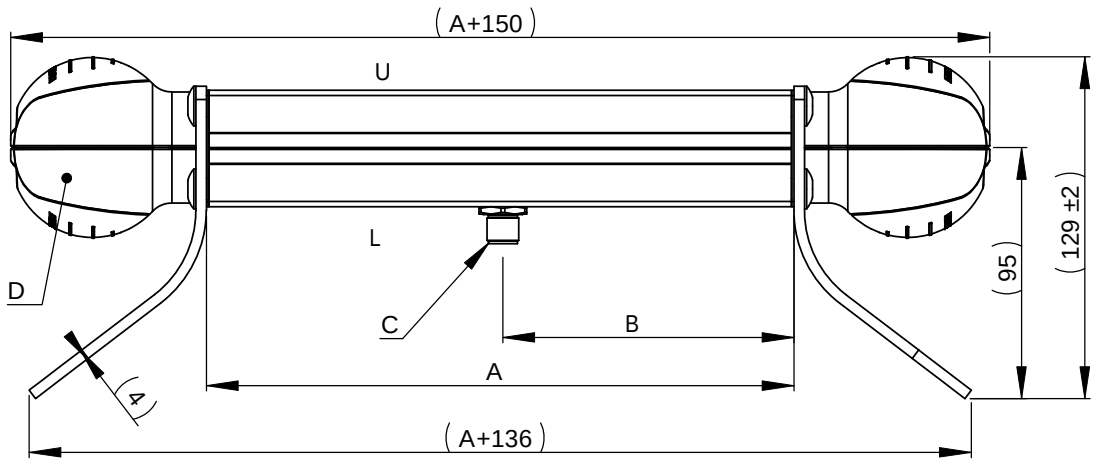

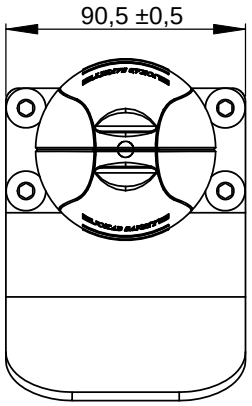

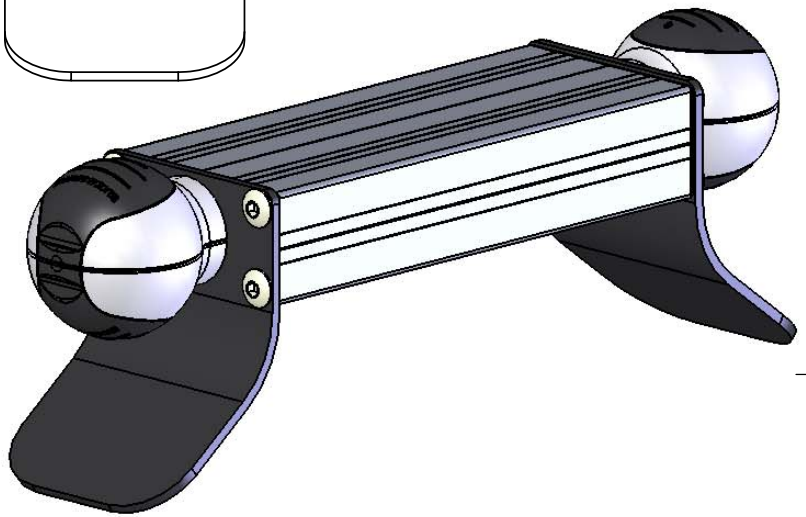

1	State dim A	
2	State dim B	
3	Type of connection	
4	Connector side U or L	
5	Type of Safeball	
6	Other request	

DO NOT FORGET TO ATTACH ELECTRICAL DIAGRAM TO REQUEST/ORDER!

This document shall not be copied without our written permission, and the contents thereof shall not be disclosed to any third party, nor be use for anyauthorized purpose.

Material	Ytbehandling		Dimension	Färg	Generell tolerans		
-	-				ISO 2768 mK		
Konstruerad av	Granskad av	Godkänd av	Datum	Generell ytjämnhet	Vyplacering	Format	Skala
MABR	-	-	050502	-		A3	1:1
Ägare			Titel/benämning				
JOKAB SAFETY			-				
			Ritningsnummer			Utgåva	Blad
COPYRIGHT JOKAB SAFETY AB - 2004			JSTD25G			-	1/1

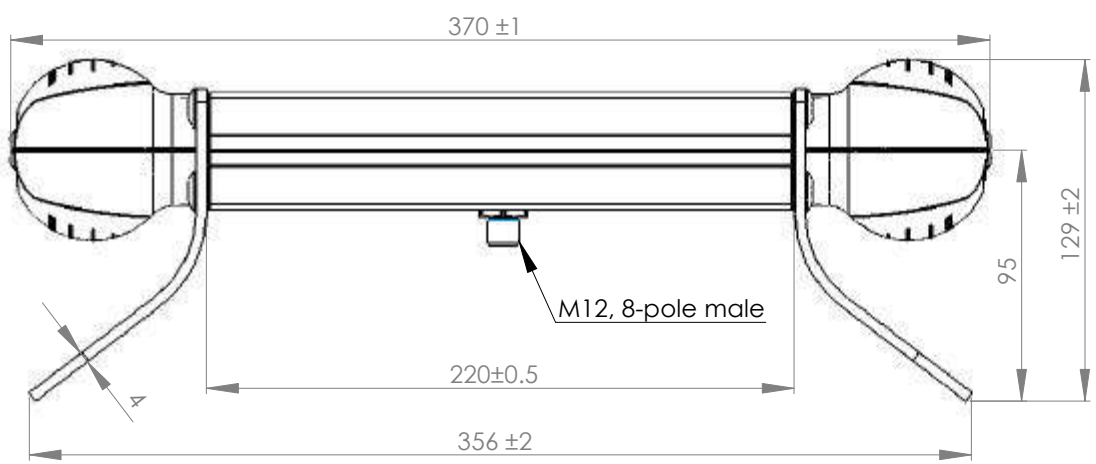

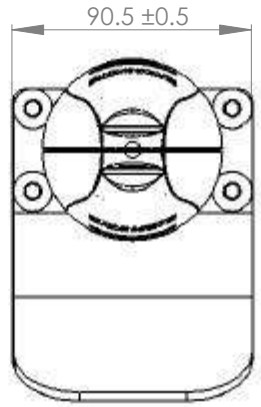

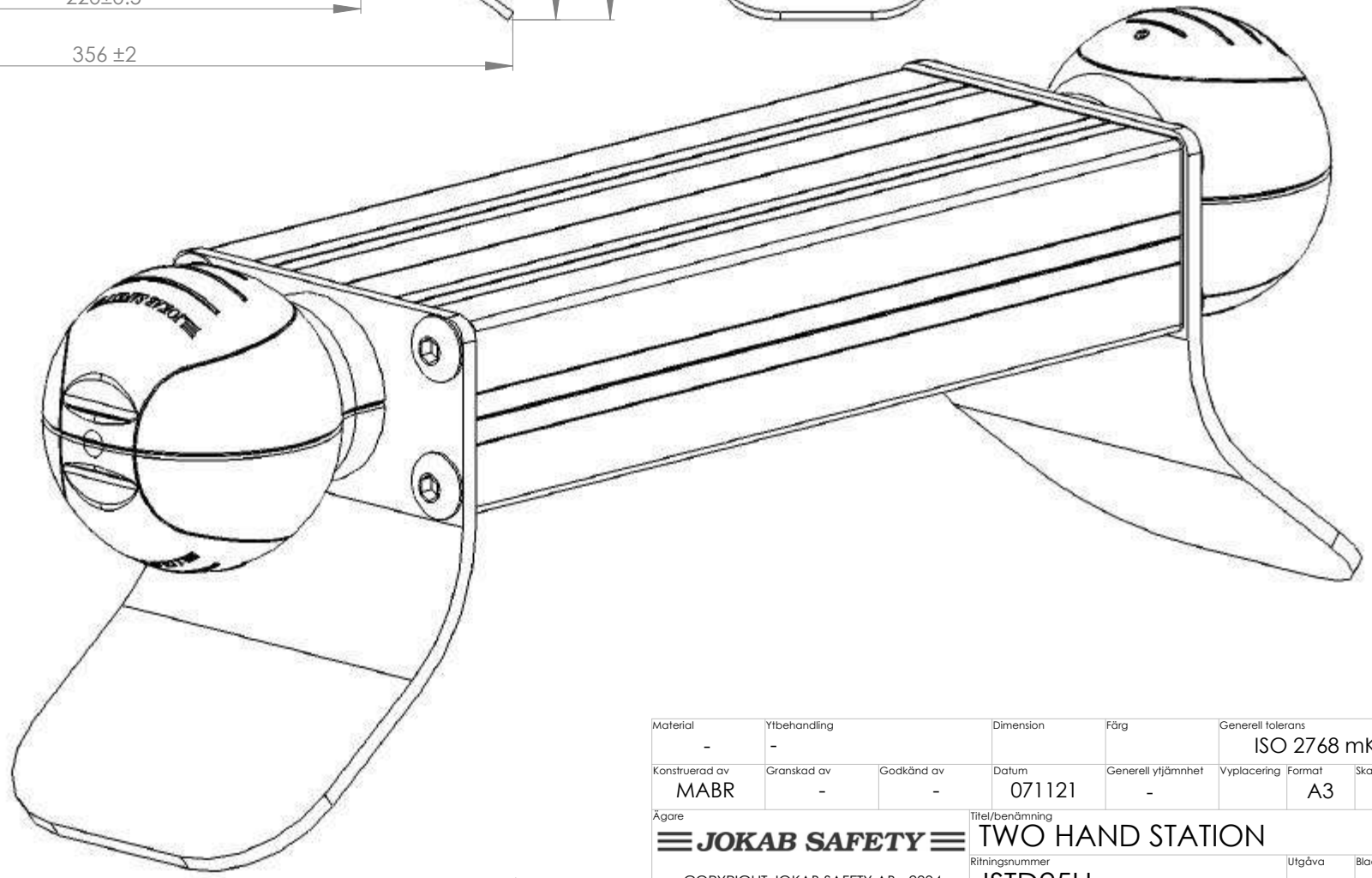

Material	Ytbehandling		Dimension	Färg	Generell tolerans		
-	-				ISO 2768 mK		
Konstruerad av	Granskad av	Godkänd av	Datum	Generell ytjämnhet	Vyplacering	Format	Skala
MABR	-	-	071121	-		A3	1:1

Ägare

JOKAB SAFETY

Titel/benämning

TWO HAND STATION

COPYRIGHT JOKAB SAFETY AB - 2004

Ritningsnummer

JSTD25H

Utgåva	Blad
-	1/2

This document shall not be copied without our written permission, and the contents thereof shall not be disclosed to any third party, nor be use for anyauthorized purpose.

1 2 3 4 5 6 7 8 9 10

SAFEBALL **JSTD25H** SAFEBALL

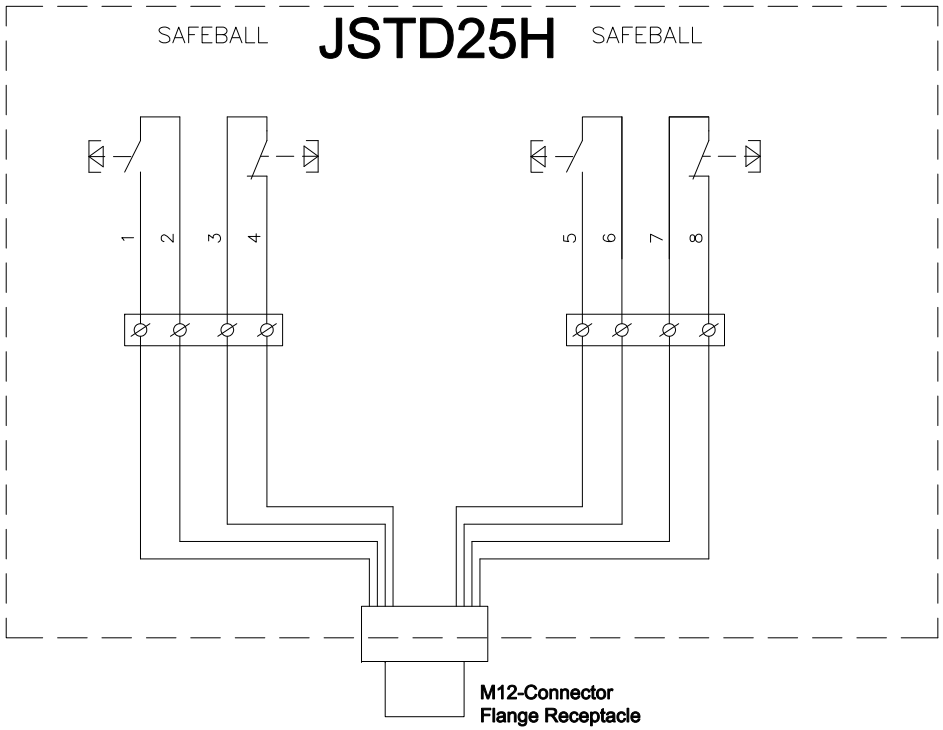

M12-Connector
Flange Receptacle
8-pole male

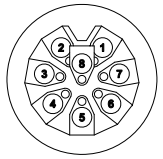

M12-C03
Contact (plug) for self assembly. Female.
As seen from cable side (inside).
Ordered separately.

M12 8 Color-code
(not always used, verify!)
1 Vit White Weiss Blanc
2 Brun Brown Braun Marron
3 Grön Green Grün Vert
4 Gul Yellow Gelb Jaune
5 Grå Grey Grau Gris
6 Rosa Pink Rosa Rose
7 Blå Blue Blau Bleu
8 Röd Red Rot Rouge

PLUTO

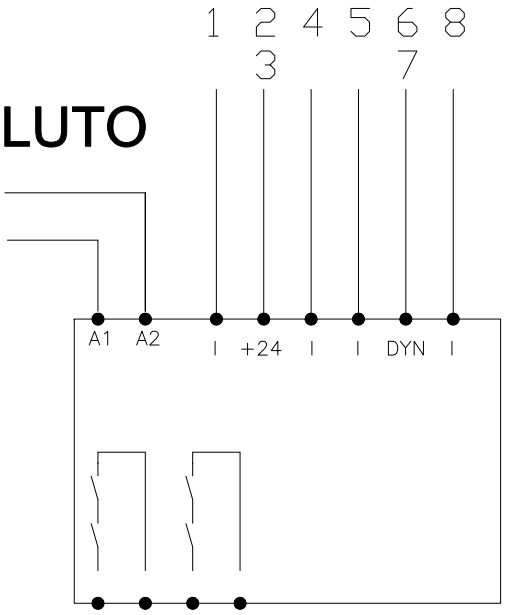

JSBR4

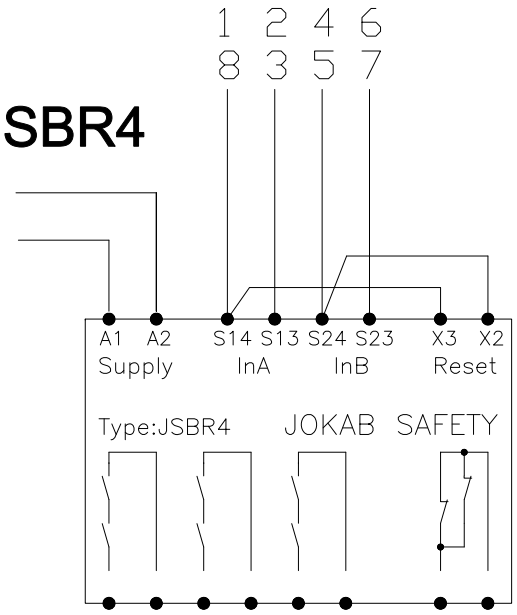

Anmärkning Remark		Konstr Design	Godk Appr	Datum Date	Blad Sheet
Anslutning Connection JSTD25H	JOKAB SAFETY	JS		080326	
		Ritad Drawn	Sidor Pages	Ritn nr Drawing no	Forts Cont
		MB		xxxxx	

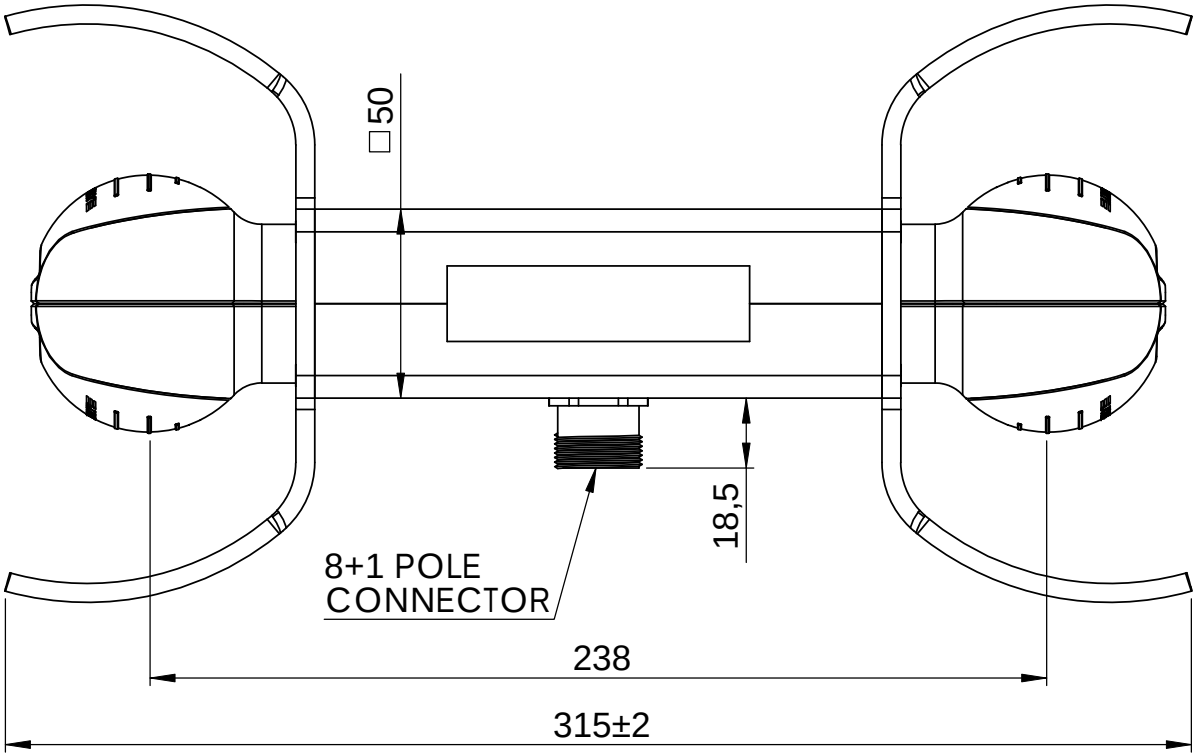

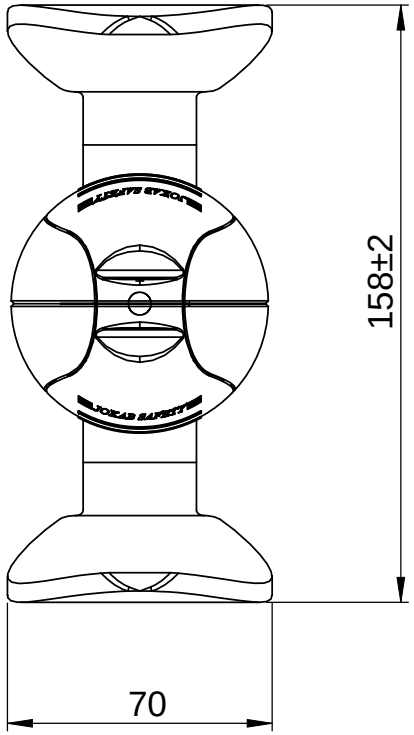

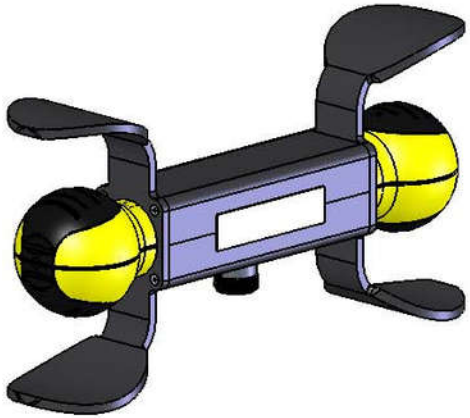

Material	Ytbehandling		Dimension	Färg	Generell tolerans		
Al & PP	-				ISO 2768 mK		
Konstruerad av	Granskad av	Godkänd av	Datum	Generell ytjämhet	Vyplacering	Format	Skala
MABR	-	XX	070706	Ra 1,6		A4	1:2

Ägare	Titel/Benämning		
JOKAB SAFETY	20-007-65		
COPYRIGHT JOKAB SAFETY AB - 2004	Ritningsnummer	Utgåva	Blad
	JSTD25P-1 New	1	1/1

This document shall not be copied without our written permission, and the contents thereof shall not be disclosed to any third party, nor be used for any unauthorized purpose.

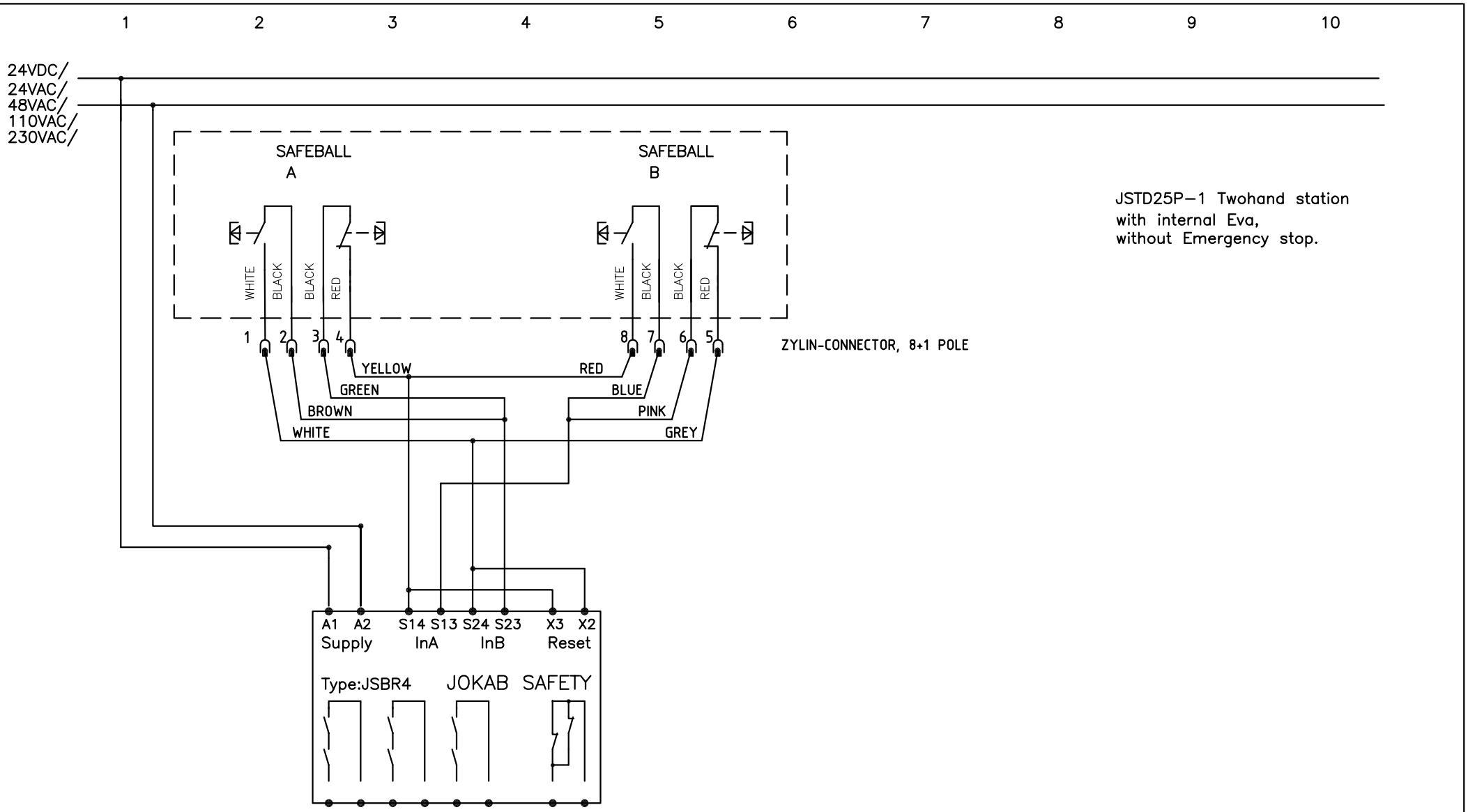

Anmärkning Remark Connection Twohanddevice Safeball JSTD25P–1to JSBR4	JOKAB SAFETY	Konstr Design JS	Godk Appr	Datum Date 061024	Blad Sheet
		Ritad Drawn MB	Sidor Pages	Ritn nr Drawing no HT5400H	Forts Cont

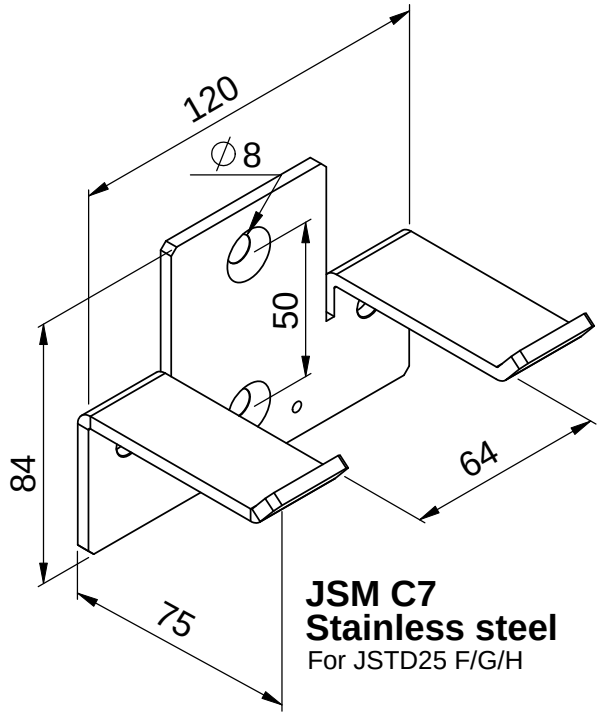

JSM C7
Stainless steel
For JSTD25 F/G/H

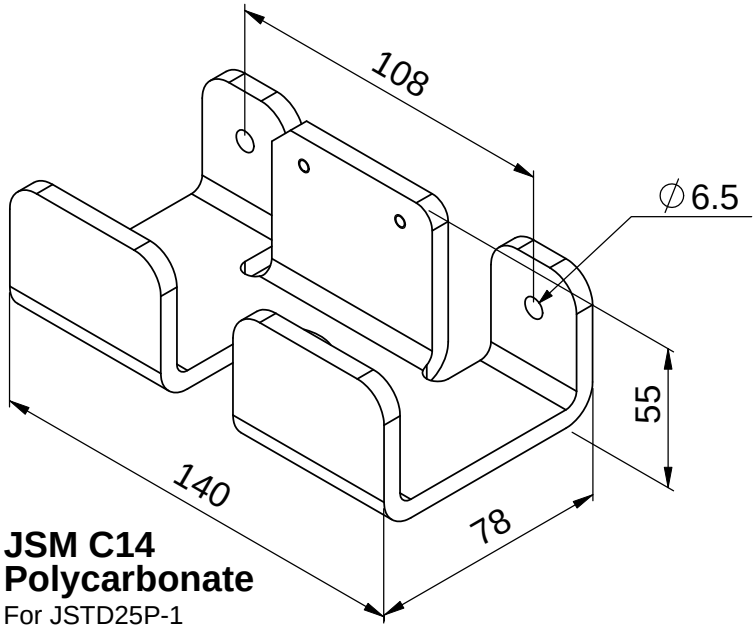

JSM C14
Polycarbonate
For JSTD25P-1

JSTK40S
JSTK80S
For JSTD25P-1

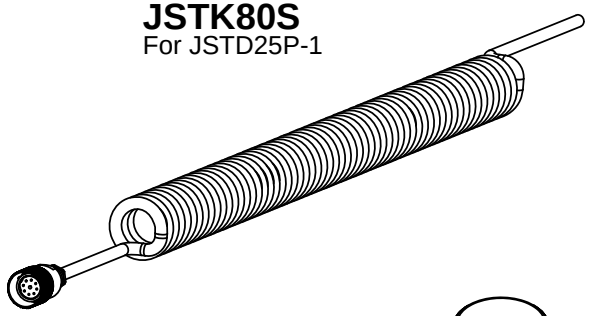

JSTK0
For JSTD25P-1

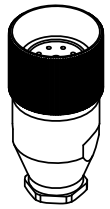

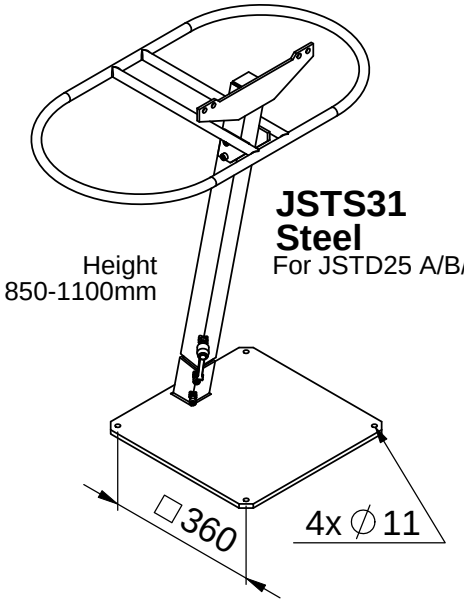

JSTS31
Steel
For JSTD25 A/B/D/E

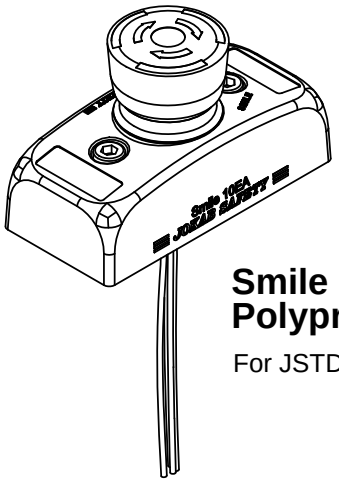

Smile 10EK
Polypropene
For JSTD25 F/G/H

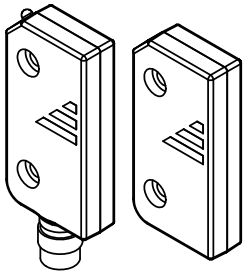

Adam & Eva
Macromelt
For JSTD25 F/G/H



M12-C101 (5-pole)
M12-C103 (8-pole)
For JSTD25 F/G/H

This document shall not be copied without our written permission, and the contents thereof shall not be disclosed to any third party, nor be used for any unauthorized purpose.