Cap for 6x6 / 12x12 Tact Switch

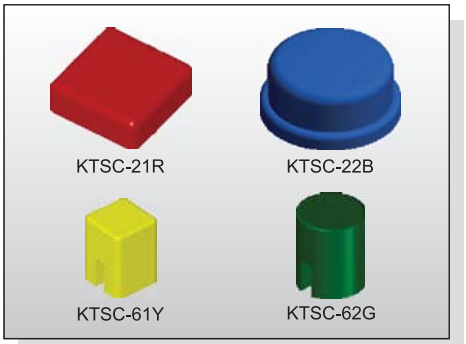

HOW TO ORDER

K T S C - □ □ □

Prod. Size: <Tactile Switch>
2=12X12mm (Can be applied on DTS□-24)
6=6x6mm (Can be applied on DTS□-644)

Cap Type:
1=Square
2=Round

Cap color:
Y=Yellow
B=Blue
R=Red
I =Ivory
K=Black
G=Green
S=Salmon
Ge=Gray

PACKAGE

<Bag>
KTSC-2: 500 pcs
KTSC-6:1500 pcs

KTSC-21

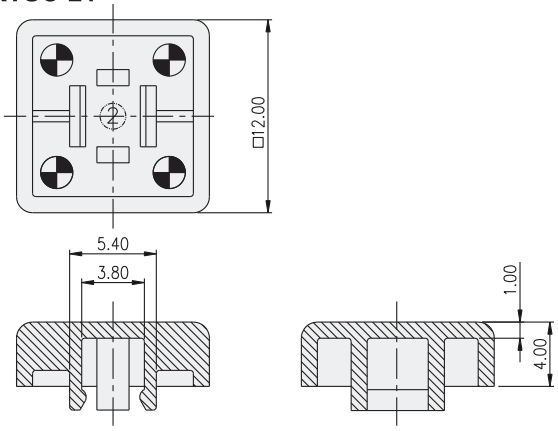

KTSC-22

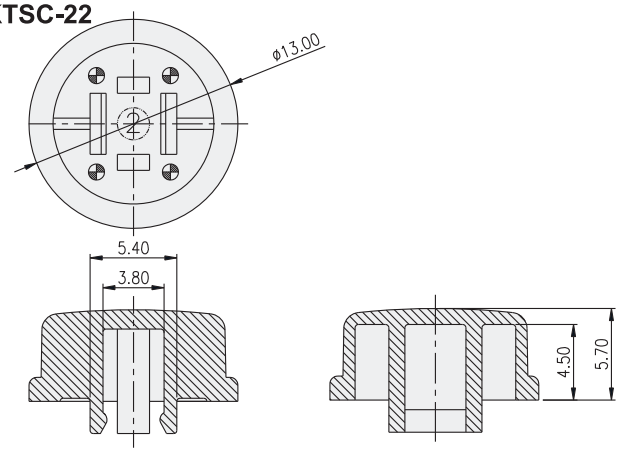

KTSC-61

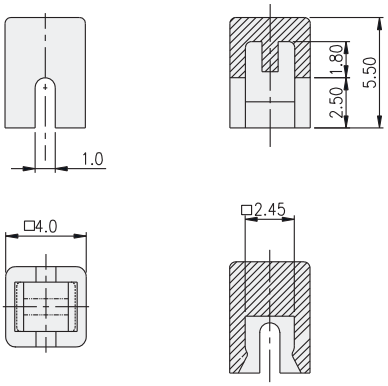

KTSC-62

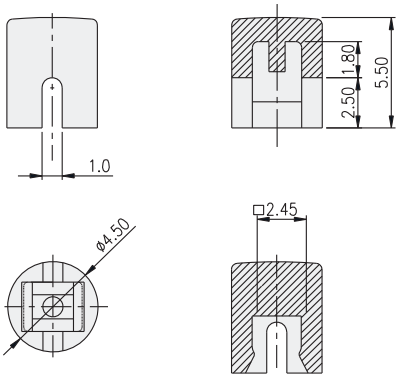

RS Components