DATASHEET



EX-BN 20-01Z-3G/D

- 1 Reed contakts
- Explosion protection for ATEX Zones 2 and 22
- Aluminium enlosure
- 104 mm x 52 mm x 47 mm
- Actuating distance up to 50 mm depending on actuating magnet and version
- Non-contact principle
- Screw connection

Data

Ordering data

Product type description	EX-BN 20-01Z-3G/D
Article number (order number)	101189767
EAN (European Article Number)	4030661347486
eCl@ss number, version 11.0	27-27-01-05
eCl@ss number, version 9.0	27-27-01-05
ETIM number, version 7.0	EC002544
ETIM number, version 6.0	EC002544

Explosion protection

Explosion protection: regulations	EN IEC 60079-0 EN IEC 60079-15 EN 60079-31
Explosion protection zones	2 22
Explosion protection category	3G 3D
Explosion protection designation	II 3G Ex nC IIC T5 Gc X II 3D Ex tc IIIC T90°C Dc X

Manufacturer declaration	ATEX Zone 2 and 22

General data

Working principle	Magnetic drive
Housing construction form	rectangular
Housing material	Light-alloy diecast, paint finish
Active area	Metal film
Gross weight	315 g

General data - Features

bias magnet	Yes
Number of normally closed (NC)	1

Mechanical data

Actuating panels	lateral
Active area	lateral
Actuating element	Magnet
Mechanical life, minimum	1,000,000,000 Operations
Impact energy, maximum	4 J
Actuating speed, maximum	18 m/s

Mechanical data - Switching distances according EN IEC 60947-5-3

Switching distance S_n	12 mm ... 45 mm
Note (Switching distance Sn)	Actuating distance up to 45 mm depending on version and actuating magnet
Repeat accuracy R	0.3 mm

Mechanical data - Connection technique

Termination	Screw terminals M20 x 1.5
Cable cross-section of the cable glands, minimum	6 mm

Cable cross-section of the cable glands, maximum	10 mm

Mechanical data - Dimensions

Length of sensor	47 mm
Width of sensor	104 mm
Height of sensor	52 mm

Ambient conditions

Degree of protection	IP67
Ambient temperature	-15 ... +70 °C
Storage and transport temperature, minimum	-25 °C
Storage and transport temperature, maximum	+70 °C
Resistance to vibrations	10 ... 55 Hz, amplitude 1 mm
Restistance to shock	30 g / 11 ms
Resistant to vibration	50 g, on sine wave oscillation

Electrical data

Switching voltage, maximum	250 VAC
Switching voltage, maximum	250 VDC
Switching current, maximum	3 A
Switching capacity, maximum	120 W
Switching capacity, maximum	120 VA
Switching element	Opener (NC)
Bounce duration, minimum	0.3 ms
Bounce duration, maximum	0.6 ms
Switching frequency, maximum	300 Hz

Electrical data - Digital Output

Design of control elements	Reed contacts

Scope of delivery

Scope of delivery	Actuator must be ordered separately. Ex-certified screwed cable gland

Accessory

Recommendation (actuator)	2x BP 10 2x BP 15/2 BP 20 BP 31 BP 11 BP 12 BP 21 BE 20

Note

Note (General)	The opening and closing functions depend on the direction of actuation, the actuating magnets and the polarity of the actuating magnets. When the switches and actuators come together, the colours must coincide: Red (S) to red (S) and green (N) to green (N).

Ordering code

Product type description:
EX-BN 20-(1)Z-3G/D

(1)

01	1 NC contact
02	2 NC contact
10	1 NO contact
20	2 NO contacts
11	1 NC contacts / 1 NO contact
R	1 bistable contact
2R	2 bistable contact
11R	2 bistable contact NC / NO

Pictures

Product picture (catalogue individual photo)



ID: kexbnf01
| 507.1 kB | .jpg | 352.778 x 181.328 mm - 1000 x 514 px - 72 dpi
| 35.7 kB | .png | 74.083 x 38.1 mm - 210 x 108 px - 72 dpi
| 68.9 kB | .jpg | 123.472 x 63.5 mm - 350 x 180 px - 72 dpi

Dimensional drawing basic component

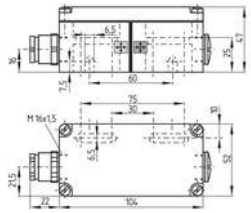

ID: 1bn20g03
| 33.4 kB | .cdr |
| 10.8 kB | .png | 74.083 x 51.858 mm - 210 x 147 px - 72 dpi
| 127.3 kB | .jpg | 352.778 x 247.297 mm - 1000 x 701 px - 72 dpi

Diagram

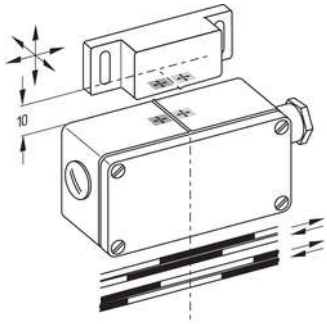

ID: 1bn20k01
| 66.1 kB | .cdr |
| 187.4 kB | .jpg | 352.778 x 349.25 mm - 1000 x 990 px - 72 dpi
| 18.5 kB | .png | 74.083 x 73.378 mm - 210 x 208 px - 72 dpi

Characteristic curve

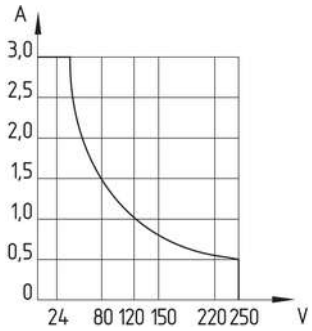

ID: kbn32d01
| 110.5 kB | .jpg | 352.425 x 371.828 mm - 999 x 1054 px - 72 dpi