IW5008

Inductive sensor

IW-3008-ANKG

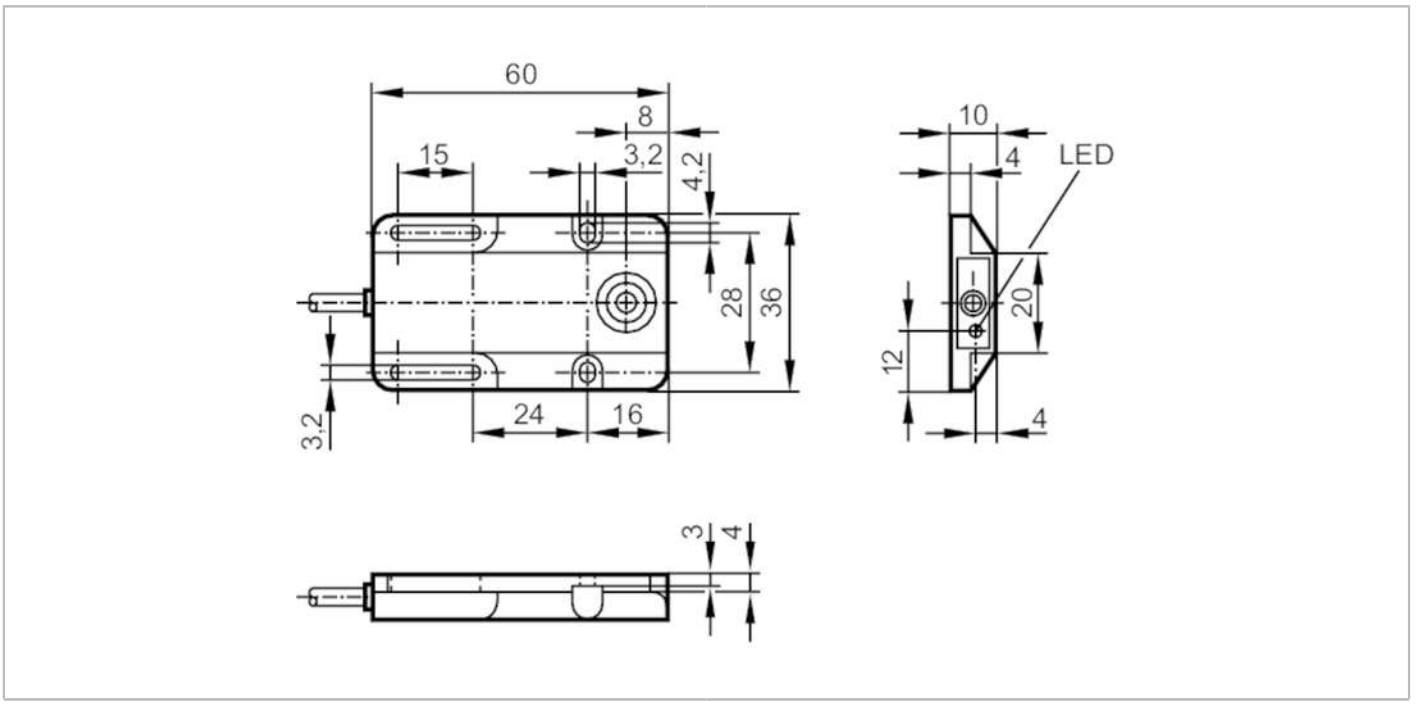

Product characteristics		
Electrical design		NPN
Output function		normally open
Sensing range	[mm]	8
Housing		rectangular
Dimensions	[mm]	60 x 36 x 10
Electrical data		
Operating voltage	[V]	10...36 DC
Current consumption	[mA]	15; (24 V)
Protection class		II
Reverse polarity protection		yes
Outputs		
Electrical design		NPN
Output function		normally open
Max. voltage drop switching output DC	[V]	2.5
Permanent current rating of switching output DC	[mA]	250
Switching frequency DC	[Hz]	120
Short-circuit protection		yes
Type of short-circuit protection		pulsed
Overload protection		yes
Detection zone		
Sensing range	[mm]	8

IW5008

Inductive sensor

IW-3008-ANKG

Real sensing range Sr	[mm]	8 ± 10 %	
Operating distance	[mm]	0...6.5	
Accuracy / deviations			
Correction factor		steel: 1 / stainless steel: 0.7 / brass: 0.4 / aluminium: 0.3 / copper: 0.2	
Hysteresis	[% of Sr]	1...15	
Switch point drift	[% of Sr]	-10...10	
Operating conditions			
Ambient temperature	[°C]	-25...80	
Protection		IP 67	
Tests / approvals			
EMC		EN 60947-5-2	
		EN 55011	class B
MTTF	[years]	1745	
Mechanical data			
Weight	[g]	58.6	
Housing		rectangular	
Mounting		non-flush mountable	
Dimensions	[mm]	60 x 36 x 10	
Materials		PBT	
Displays / operating elements			
Display		switching status	1 x LED, yellow
Remarks			
Pack quantity		1 pcs.	
Electrical connection			

Cable: 2 m, PVC; 3 x 0.14 mm²

Connection

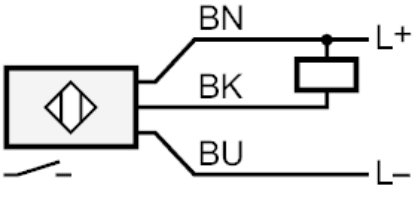

	Core colours :
BN =	brown
BU =	blue
BK =	black