Mounting and wiring instructions /

Safety relay module

for emergency stop monitoring and guard door monitoring

PROTECT SRB 101EXi-1R

BG **Забележка**
Ако не сте прочели тези инструкции, моля свържете се с нашите представители (www.elan.de).

CZ **Upozornění**
Pokud byste si nemohli přečíst tento návod, obraťte se prosím na naše zastoupení (www.elan.de).

D **Hinweis**
Sollten Sie diese Anleitung nicht lesen können, wenden Sie sich bitte an unsere Vertretung (www.elan.de).

DK **Bemærk**
Hvis du ikke kan læse denne anvisning, bedes du henvende dig til vores repræsentant (www.elan.de).

E **Nota**
En el caso de que no pueda leer estas instrucciones, p.f. diríjase a nuestro representante (www.elan.de)

EST **Märkus**
Kui näete seda instruktsiooni moonutatult, palume pöörduda meie esinduse poole (www.elan.de).

F **Indication**
Si vous ne pouvez pas lire cette notice, veuillez vous rendre sur notre site Internet (www.elan.de).

FI **Huomautus**
Jos et voi lukea ohjetta, ota yhteys edustajaamme (www.elan.de).

GB **NB**
Should you not be able to read these instructions, please contact our agency (www.elan.de).

GR **Υπόδειξη**
σε περίπτωση κατά την οποία δεν μπορείτε να διαβάσετε αυτές τις οδηγίες, να απευθυνθείτε στην αντιπροσωπεία μας (www.elan.de).

H **Javaslat**
Ha nem tudná elolvasni a kézikönyvet, kérjük, forduljon a képvisletünkhöz (www.elan.de).

I **Nota**
Nel caso in cui non riusciate a leggere questo manuale siete pregati di rivolgervi alla nostra rappresentanza (www.elan.de).

IRL **Eolas**
Mura bhfuil tú in ann an lámhleabhar seo a léamh, déan teagmháil lenár bhfochuideachta, le do thoil (www.elan.de)

LT **Nuoroda**
Jei negalite perskaityti šios instrukcijos, prašome kreiptis į mūsų atstovybę (www.elan.de).

LV **Norāde**
Ja nevariet izlasīt šo instrukciju, lūdzam griezties mūsu pārstāvniecībā (www.elan.de).

M **Jekk jogħġbok innota**
Jekk ma tkunx tista' taqra din l-istruzzjoni, jekk jogħġbok ikkonsulta mar-rappreżentant tagħna (www.elan.de)

NL **Opmerking**
Als u deze handleiding niet kunt lezen, gelieve ons te contacteren (www.elan.de)

PL **Uwaga**
Jeśli nie mogą Państwo przeczytać tej instrukcji, prosimy o kontakt z naszym przedstawicielstwem (www.elan.de).

PT **Nota**
Se não conseguir ler este manual, contacte a nossa delegação (www.elan.de).

RO **Indicație**
În cazul în care nu puteți citi acest manual de utilizare, contactați reprezentanța noastră (www.elan.de).

SE **Anmärkning**
Skulle ni inte kunna läsa denna instruktion, ta vänligen kontakt med vår agentur (www.elan.de)

SI **Opozorilo**
Če ne uspete prebrati navodil, se obrnite na naše zastopstvo (www.elan.de).

SK **Upozornenie:**
Ak by ste si nemohli prečítať tento návod, obráťte sa prosím na naše zastúpenie (www.elan.de)."

SCHMERSAL
Elan

Mounting and wiring instructions /

Safety relay module

for emergency stop monitoring and guard door monitoring

PROTECT SRB 101EXi-1R

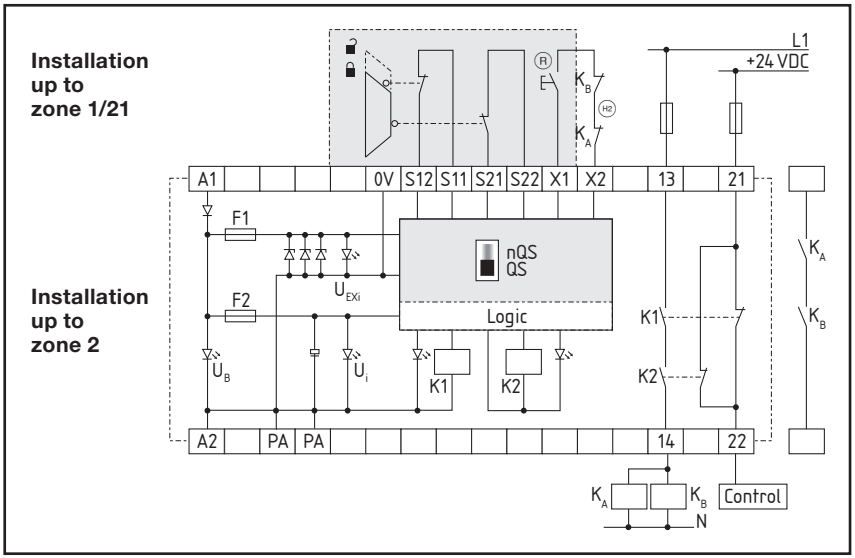

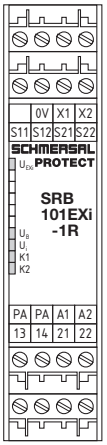

2-channel selection shown by way of example of a guard monitoring with two position switches, of which at least one is positively opening; with external reset button Ⓡ.

Power level: 2-channel selection control, suitable for contact amplification or contact multiplication by means of contactor or relay with positive driven contacts.

Wire breaks, earth leakages and cross-shorts in the monitoring circuits are detected.

Ⓗ2 = feedback loop

Safety function

The safety function is defined as follows:
The enabling output 13-14 is open, when the inputs S11-S12 and/or S21-S22 opens.

The safety related current path with the output contacts 13-14 fulfil in consideration with a B_{10d}-value view the following requirements (refer also to “Information within the meaning of DIN EN ISO 13849-1”):

- category 4 – PL e
  acc. DIN EN ISO 13849-1:2007
- is equivalent to SIL 3
  acc. DIN EN 61508-2:2002
- is equivalent to SILCL3
  acc. DIN EN 62061:2005

(is equivalent to control category 4
acc. DIN EN 954-1:1997)

For designation of the performance level (PL) acc. DIN EN ISO 13849-1:2007 of the whole safety function (e.g. sensor, logic, actor) a view to all relevant components is necessary.

Type designation

SRB 101EXi-1R (installation of the sensors up to zone 1/21)

- Enabling current paths: 1 NO, 1 NC
- Operating voltage: 24 VDC
- Order number: 1196283
- Approvals: TÜV 08 ATEX 7522, TÜV 08 ATEX 7557X

Authorised applications

The applicable laws or guidelines for the use or the planned application are to be considered. The safety relay module is for use in:

- Emergency stop circuits with control devices to DIN EN ISO 13850:2007, EN 60947-5-5:2005
- Guard door monitoring circuits with locking device to EN 1088:2007
- Monitoring circuits with electromagnetic safety switches to EN 60947-5-3:2005

Technical data

Operating voltage	24 VDC –15%/+20%, residual ripple max. 10%
Fuse of the operating voltage	• internal fuse F1: T 50 mA/250 V • internal fuse F2: T 100 mA/250 V
Power consumption	max. 3.0 W
Switching capacity of the enabling contacts	230 VAC, 3 A ohmic (inductive with suitable suppressor circuit): • AC-15: 230 VAC/3 A • DC-13: 24 VDC/3 A
Fuse of the enabling contacts	3.15 A slow-blowing
Min. switching capacity	min. 10 V/10 mA
Contact resistance	max. 100 mΩ in new state
Utilisation categories	AC-15, DC-13: EN 60947-5-1:2004
Contact materials/contacts	AgSnO, self-cleaning, positively driven
Switching capacity of the auxiliary contacts	24 VDC/2 A
Fuse of the auxiliary contacts	2 A slow-blowing
Current and voltage at S11, S12, S21, S22	24 VDC/5 mA
Current limiting at S11, S12, S21, S22	15 mA
Pick-up delay time	approx. 20 ms
Drop-out delay time	• at emergency stop: approx. 20 ms • at power failure: approx. 20 ms
Bypass in the case of voltage drops	approx. 15 ms
Air clearance and creepage distance	• IEC 60664-1:2007 (DIN VDE 0110-1), 4 kV/2 (basic isolation) • EN 60079-11:2007 (VDE 0170/0171 Part 7)
Class of protection	• housing: IP 40 • terminals: IP 20 • installation space: IP 54
Cable connections	• Single core: rigid or flexible (with or without wire-end ferrule) 0.25 … 2.5 mm^2 • Dual wire with same cross section: – rigid or flexible (with wire-end ferrule without plastics) 0.25 … 2.5 mm^2 – flexible (with or without TWIN wire-end ferrule) 0.5 … 1.5 mm^2
Tightening torque	0.6 Nm
Max. resistance of entire line	30 Ohm
Cable lengths (at nominal load)	• 1-channeled without cross-short recognition: 1.5 mm^2: 1,500 m; 2.5 mm^2: 2,500 m • 2-channeled with/without cross-short recognition: 1.5 mm^2: 1,500 m; 2.5 mm^2: 2,500 m
Dimensions (h/w/d)	100 mm/22.5 mm/121 mm
Weight	approx. 220 g
Ambient operating temperature	–25 °C … +60 °C
Storage temperature	–40 °C … +85 °C
Mechanical life time	10^7 switching cycles
Terminal markings	EN 60947-1:2007
EMC	EN 60947-5-1:2004
Oscillations	DIN EN 60068-2-6:1996: • frequency: 10 … 55 Hz • amplitude: 0.35 mm
Environmental conditions	DIN EN 60068-2-78:2002
CE conformity	acc. directives MRL: 98/37/EC, EMC: 2004/108/EC, ATEX: 94/9/EC

EX-relevant technical data

EC type examination/type examination	TÜV 08 ATEX 7522 / TÜV 08 ATEX 7557 X
Group, category, type of protection	• gas: ⟨Ex⟩ II 3 G Ex nAnC IIC T5 (SRB in zone 2) • gas/dust: ⟨Ex⟩ II (2) GD [Ex ib] IIC / [Ex ibD] (electric circuits in zones 1, 21/2, 22)
Safety-related maximum current U_m	253 VAC (Attention: U_m is'nt rated voltage!)
Inputs (S11-S12, S21-S22, X1-X3)	[Ex ib] IIC / [Ex ibD]
Temperature class	T5
Max. output voltage U_o	33.6 V
Current I_o	57.0 mA
Max. output power P_o	478.8 mW (characteristic curve linear)
Isolation (intrinsically safe/other circuits)	safe isolation acc. EN 60079-11:2007, voltage peak value 375 V

Group, category	**II C**				**II B**					
External capacitance C_o (nF)	26	36	46	49	160	180	230	280	350	412
External inductance L_o (mH)	4.0	2.0	1.0	0.5	38.0	5.0	2.0	1.0	0.5	0.2

Reference value of a circuit: C ≈ 200 nF/km, L ≈ 1 mH/km (C ≈ 200 pF/m, L ≈ 1 µH/m)

Mounting of the sensors
The execution of the installation of the intrinsically safe circuits is to be realized according the up-to-date European standards EN 60079-14:2003 or EN 61 241-14:2004.

Attention: Acc. to EN 60079-11:2007 the following is to be considered at the installation: The distance of ≥ 6 mm between the terminals of the intrinsically safe circuits to other intrinsically safe circuits should be considered. The distance of ≥ 50 mm between the terminals of the intrinsically safe circuits to other not intrinsically safe circuits should be considered.

Initiation and installation are to be accomplished only by therefore qualified personnel.

Special terms for use in zone 2

Installation in Zone 2

- The units are to be installed in switching or junction boxes, which consider the terms of EN 60079-15:2005.
- The unit may only be installed and operated by personnel who are familiar with both these instructions and the current regulations for safety at work and accident prevention.
- The intrinsically safe circuits of the unit (light blue terminals) may be layed in explosion-endangered areas. In this procedure there is to pay attention to a safe disconnection to all not intrinsically safe circuits.

Attention:

- Connecting and disconnecting of contacts of not intrinsically safe circuits under potentially explosion atmosphere is not allowed.
- The housing may only be cleaned with a wet cloth.
- The life cycle of the module, relating to the type of protection "nC", is at least 15 years. After end of this time the module is to be changed or to be send to the manufacturer for a check-up!

Attention:

- The temperature declarations (–25 °C ≤ Ta ≤ +60 °C) of the module refer to a minimum volume of the switching box of approx. 2,400 cm³ per SRB. Make sure you maintain a distance of approx. 5 cm to other sub-assemblies.

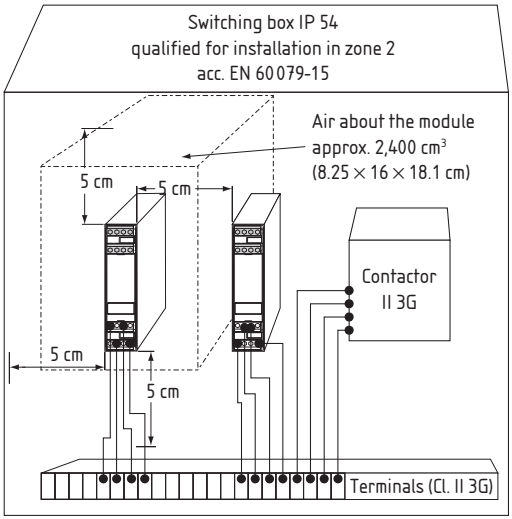

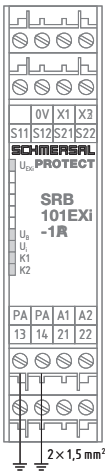

Potential equalisation

Connection of the PA terminals

- Acc. EN 60079-14:2003 Clause 12.2.4 two conductors with a cross section of at least 1.5 mm² may be connected between the terminals PA and the potential equalisation.

Circuit examples

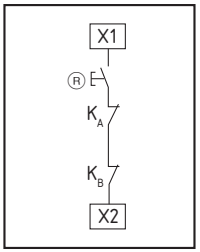

Start configuration

External reset button (without edge detection)

- The reset button is connected – as shown – in series to the feedback loop.
- The module is activated by resetting (after releasing) the reset button (= detection of the trailing edge). Faults in the reset button, e.g. welded contact or manipulation which could lead to unintended restart are recognised by this circuit leading to operational interruption.
- The control of the reset button effected over an intrinsically safe circuit.
- For starting the module the reset button can be executed as “simple apparatus”.
- Example devices refer to section “Simple apparatus”.

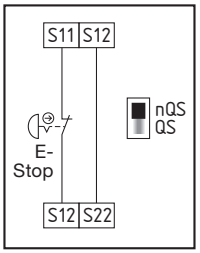

Sensor configuration

Single-channel emergency stop circuit with control devices acc. DIN EN ISO 13850:2007 (EN 418) and EN 60947-5-5:2005

- Detects wire breaks and earth leakages in the control circuits.
- For monitoring the safety circuits the emergency stop control devices can be executed as “simple apparatus”.
- Example devices refer to section “Simple apparatus”.
- Category 2 – PL d acc. DIN EN ISO 13849-1:2007 reachable.

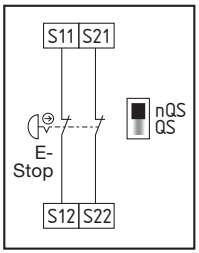

Sensor configuration

Dual-channel emergency stop circuit with control devices acc. DIN EN ISO 13850:2007 (EN 418) and EN 60947-5-5:2005

- Detects wire breaks and earth leakages in the control circuits.
- Cross-shorts between the control circuits are not detected.
- For monitoring the safety circuits the emergency stop control devices can be executed as “simple apparatus”.
- Example devices refer to section “Simple apparatus”.
- Category 4 – PL e acc. DIN EN ISO 13849-1:2007 reachable (with protected cable laying).

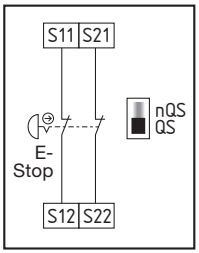

Sensor configuration

Dual-channel emergency stop circuit with control devices acc. DIN EN ISO 13850:2007 (EN 418) and EN 60947-5-5:2005

- Detects wire breaks and earth leakages in the control circuits.
- Cross-shorts between the control circuits are detected.
- For monitoring the safety circuits the emergency stop control devices can be executed as “simple apparatus”.
- Example devices refer to section “Simple apparatus”.
- Category 4 – PL e acc. DIN EN ISO 13849-1:2007 reachable.

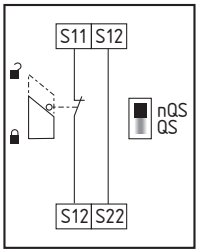

Sensor configuration

Single-channel guard monitoring with interlocking devices acc. EN 1088:2007

- At least one positively opening contact.
- Detects wire breaks and earth leakages in the control circuits.
- For monitoring the safety circuits the emergency stop control devices can be executed as “simple apparatus”.
- Example devices refer to section “Simple apparatus”.
- Category 2 – PL d acc. DIN EN ISO 13849-1:2007 reachable.

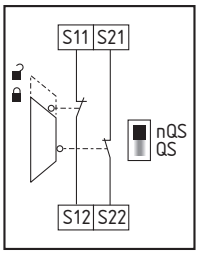

Sensor configuration

Dual-channel guard monitoring with interlocking devices acc. EN 1088:2007

- At least one positively opening contact.
- Detects wire breaks and earth leakages in the control circuits.
- Cross-shorts between the control circuits are not detected.
- For monitoring the safety circuits the emergency stop control devices can be executed as “simple apparatus”.
- Example devices refer to section “Simple apparatus”.
- Category 4 – PL e acc. DIN EN ISO 13849-1:2007 reachable (with protected cable laying).

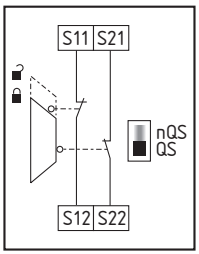

Sensor configuration

Dual-channel guard monitoring with interlocking devices acc. EN 1088:2007

- At least one positively opening contact.
- Detects wire breaks and earth leakages in the control circuits.
- Cross-shorts between the control circuits are detected.
- For monitoring the safety circuits the emergency stop control devices can be executed as “simple apparatus”.
- Example devices refer to section “Simple apparatus”.
- Categorie 4 – PL e acc. DIN EN ISO 13849-1:2007 reachable.

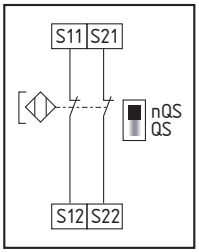

Sensor configuration

Dual-channel control with electro-magnetic safety switches acc. EN 60947-5-3:2005

- Detects wire breaks and earth leakages in the control circuits.
- Cross-shorts between the control circuits are not detected.
- For monitoring the safety circuits the emergency stop control devices can be executed as “simple apparatus”.
- Example devices refer to section “Simple apparatus”.
- Category 3 – PL e acc. DIN EN ISO 13849-1:2007 reachable.

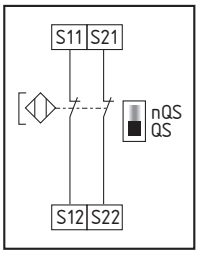

Sensor configuration

Dual-channel control with electro-magnetic safety switches acc. EN 60947-5-3:2005

- Detects wire breaks and earth leakages in the control circuits.
- Cross-shorts between the control circuits are detected.
- For monitoring the safety circuits the emergency stop control devices can be executed as “simple apparatus”.
- Example devices refer to section “Simple apparatus”.
- Category 3 – PL e acc. DIN EN ISO 13849-1:2007 reachable.



Attention!

It is only admissible to connect electromagnetic safety switches to the analysis circuitry if the requirements of standard EN 60947-5-3:2005 are satisfied. The following minimum technical requirements must be satisfied:

- switching capacity: min. 3 W
- switching voltage: min. 40 VDC
- switching current: min. 75 mA

Simple apparatus

The simple electrical apparatus fulfil the requirements of the type of protection "Intrinsic Safety" (EN 60079-11, EN 61241-11). Under the listed installation conditions these can be used in the defined explosion-endangered areas.

The installation conditions (e.g. EN 60079-14, EN 61241-14), the safety designations (national designations too) and the accident prevention regulations must be pointed out.

Conditions to intrinsically safe circuits:
- Only one intrinsically safe circuit may be connected to the module SRB 101EXi-1R.
- Make sure that the self-safety of the circuit is not affected.
- Housings consider at least the protection type IP 54 (EN 60529) at gas, IP6X at dust (IP5X at not conductive dusts in zone 22).

Allowed equipment for use in connection with the module SRB 101EXi-1R

Reset button

The following devices can be used as "simple apparatus":
- EX-RDT... (Elan Schaltelemente GmbH & Co. KG)
- EX-RDM... (Elan Schaltelemente GmbH & Co. KG)

Emergency stop control devices

The following device can be used as "simple apparatus":
- EX-RDRZ... (Elan Schaltelemente GmbH & Co. KG)

Locking devices

The following devices can be used as "simple apparatus":
- EX-AZ 16-...-3D (K.A. Schmersal GmbH)
- EX-AZ 17-...-3D (K.A. Schmersal GmbH)
- EX-AZ 335-...-3D (K.A. Schmersal GmbH)
- EX-AZ 355-...-3D (K.A. Schmersal GmbH)
- EX-AZ 415-...-3D (K.A. Schmersal GmbH)
- EX-AZ 3350-...-3D (K.A. Schmersal GmbH)
- EX-Z/T 235-...-3D (K.A. Schmersal GmbH)
- EX-Z/T 335-...-3D (K.A. Schmersal GmbH)

Safety magnet switches

The following devices can be used as "simple apparatus":
- EX-BN 20-...-3G/D (K.A. Schmersal GmbH)
- EX-BNS 33-...-3G/D* (K.A. Schmersal GmbH)
- EX-BNS 120-...-3G/D* (K.A. Schmersal GmbH)
- EX-BNS 180-...-3G/D (K.A. Schmersal GmbH)
- EX-BNS 303-...-3G/D* (K.A. Schmersal GmbH)

* without LED version

Installation instructions

Application area acc. ATEX directive:
- Category 2G, 3G: Usage in gas explosion-endangered areas of the zones 1 and 2
- Category 2D, 3D: Usage in dust explosion-endangered areas of the zones 21 and 22

For reset buttons, emergency stop control devices, locking devices and safety magnet switches:

Technical data in the intrinsically safe circuit:
- voltage U_i = 40 V
- current I_i = 75 mA
- capacity C_i = 0 µF
- inductivity $L_i \approx$ 0 mH
- temperature class T6

Cable or conductor entry:
- cable outer diameter: 7 … 12 mm
- The cable or conductor entry is made for stationary laying of the cables or conductors..
- The cable or conductor entry is to be mounted with a tightening torque of 10 … 14 Nm (reference value).

Cables/conductor (exemplary):
- The cable or the conductor are layed mechanically protected.
- The cable or the conductor are to lay separated of other not intrinsically safe circuits.

For reset buttons and emergency stop control devices additional:
- Mounting box EX-EBG 331.0 (Elan Schaltelemente GmbH & Co. KG)
- Mounting box EX-EBG 633.0 (Elan Schaltelemente GmbH & Co. KG)

Mounting of the mounting box:
- Mounting is only allowed in the mounting boxes EX-EBG 331.0 or EX-EBG 633.0.
- In the case of using the mounting box EX-EBG 633.0 the third borehole is to be plugged with the plug for the control device entry EX-MBN.
- The installation is to be done acc. the instructions for EX-RDT or EX-RDM.
- The housing or the button may not be earthed.



Attention!

Only one intrinsically safe circuit may be connected to the module SRB 101EXi-1R.

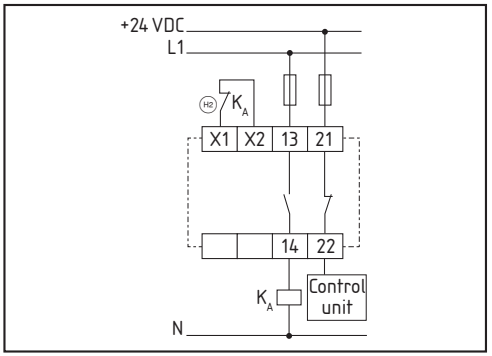

Actor configuration

Single-channel control with feedback loop

- Suitable for contact amplification or contact multiplication by means of relays or contactors with positively opening contacts.
- If the feedback is not required it is to be replaced by a bridge.
- **Attention:** Acc. to EN 60079-11:2007 the following is to be considered at the installation: The distance of ≥6 mm between the terminals of the intrinsically safe circuits to other intrinsically safe circuits should be considered. The distance of ≥50 mm between the terminals of the intrinsically safe circuits to other not intrinsically safe circuits should be considered.

H2 = Feedback loop

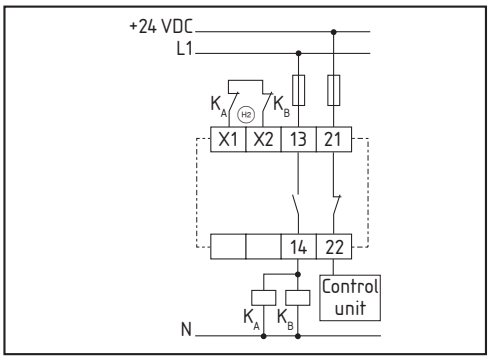

Actor configuration

Dual-channel control with feedback loop

- Suitable for contact amplification or contact multiplication by means of relays or contactors with positively opening contacts.
- If the feedback is not required it is to be replaced by a bridge.
- **Attention:** Acc. to EN 60079-11:2007 the following is to be considered at the installation: The distance of ≥6 mm between the terminals of the intrinsically safe circuits to other intrinsically safe circuits should be considered. The distance of ≥50 mm between the terminals of the intrinsically safe circuits to other not intrinsically safe circuits should be considered.

H2 = Feedback loop

Function description

- The SRB 101EXi-1R is a dual-channel safety relay module for the monitoring of emergency stop control devices, guard monitoring and safety magnet switches.
- In the case of closed protection circuits S11-S12 and S21-S22 and closed feedback loop X1-X2 the module starts up after activating and releasing and close the enabling path 13-14.
- By actuation of the emergency stop control device or an other protection device the enabling path 13-14 will be opened directly.
- Via the signalling path 21-22 e.g. an external control can be signalized the switching condition of the SRB 101EXi-1R.
- The module can be restarted when both internal relays K1 and K2 have been dropped out.

Data within the meaning of DIN EN ISO 13849-1:2007	
B_{10d} value (for one channel)	• with low load: 20,000,000 • with maximum load: 400,000
DC (internal error detection)	99% (high)
CCF	>65 points
Conversion in $MTTF_d$: refer to DIN EN ISO 13849-1:2007 Annex C Item C.4.2 $MTTF_d = \frac{B_{10d}}{0.1 \times n_{op}}$ $n_{op} = \frac{d_{op} \times h_{op} \times 3{,}600\ s/h}{t_{cycle}}$	d_{op} = average number of operating day per year h_{op} = average number of operating hours per day t_{cycle} = average request of the safety function in s (for example 4 × per hour = 1 × per 15 min. = 900 s)



Opening of the front cover

- To open the front cover insert a slotted screw driver in the lower and upper recess of the cover and lift it slightly.
- If the front cover is removed, the regulations for ESC have to be complied.
- After adjustment the front cover has to be replaced.

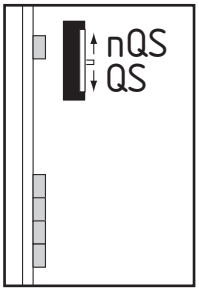



Attention!
Don't touch before discharge!

Adjustment of the switch

Programming to function cross-short recognition (QS, = delivery status) effected by the switch under the front lid of the module.

Operating the switch is only allowed in free from tension condition mit the finger or a blunt isolated tool.

Pos. nQS (top):
Not cross-short safe, applicable for single-channel applications and applications with non-floating outputs in the control circuits.

Pos. QS (bottom):
Cross-short safe, applicable for dual-channel applications without non-floating outputs in the control circuits.

LED functioning

K1	Status channel 1
K2	Status channel 2
U_B	Status internal power supply (LED lightening when power supply is connected to terminal A1-A2)
U_i	Status internal power supply (LED lightening when power supply is connected to terminal A1-A2 and internal fuse F1 is okay)
U_{EXi}	Status internal power supply (LED lightening when power supply is connected to terminal A1-A2 and internal fuse F1 is okay)

Maintenance

Service
- The module is servicing-free.
- The module has to be integrated into the periodic check-ups acc. to Betriebssicherheitsverordnung/ATEX-Betreiberrichtlinie (99/92/EG) (at least 1 × per year).

Emergency maintenance
- Modifying of modules, which are connected to explosion-endangered areas, is not allowed.
- Repairing of this modules is also not allowed.

Mounting

The housing will be attached into the DIN rail with the rear side up, slightly tilted forward and pushed above until locked.

Dismantling

Push the rear side of the relay up; tilt forward and demount.

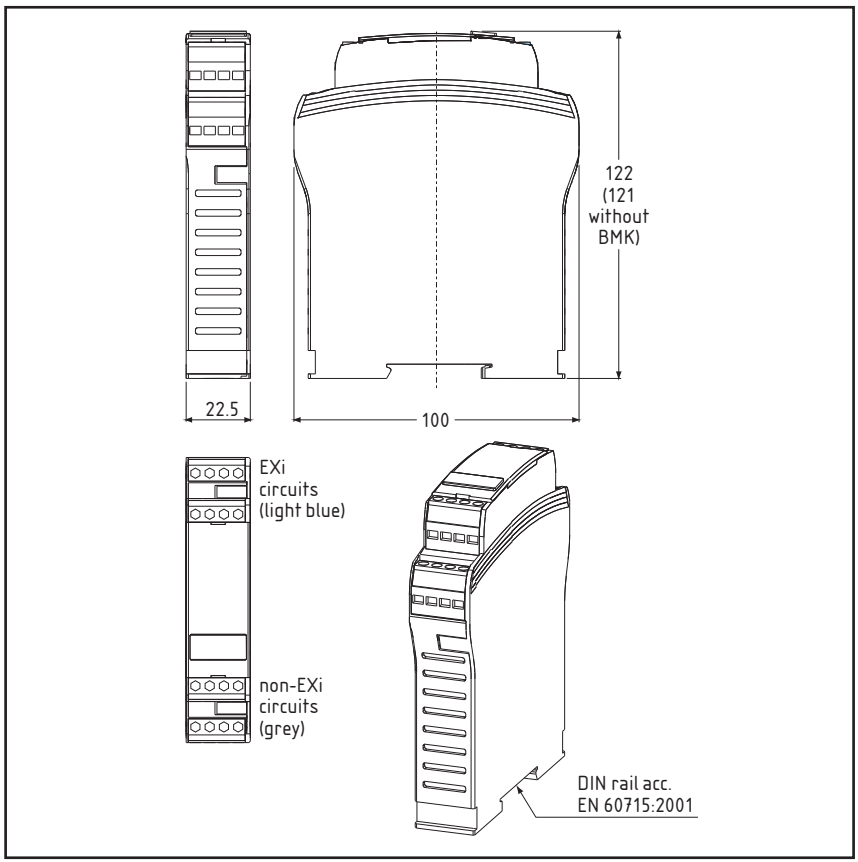

EG-Konformitätserklärung
EC-Declaration of Conformity

Hiermit erklären wir, dass das (die) nachfolgend aufgeführte(n) Produkt(e) aufgrund der Konzipierung und Bauart den Anforderungen der unten angeführten Europäischen Richtlinien entspricht (entsprechen)
We hereby declare, that the following product(s) conform to the below mentioned European Directive

Bezeichnung des (der) Produkt(e)s: *Name(s) of the product(s):*	**PROTECT SRB 101EXi-1A, PROTECT SRB 101EXi-1R, PROTECT SRB 200EXi-1A, PROTECT SRB 200EXi-1R**
Beschreibung des (der) Produkt(e)s: *Description(s) of the product(s):*	**Sicherheits-Relais-Baustein** *Safety Relay Module*
Einschlägige EG-Richtlinien: *Relevant EC-Directives:*	2004/108/EG EMV-Richtlinie *2004/108/EG EMC Directive* 94/9/EG ATEX Richtlinie *94/9/EG ATEX Directive* 98/37/EG EG Maschinenrichtlinie [1] *98/37/EC EC Machinery Directive* [1]
Ort und Datum der Ausstellung: *Place and Date of issue:*	Wettenberg, den 2008-04-16
Änderung: *Revision:*	*-- / --*

[1] Sicherheitsbauteil entspr. Artikel 1, 2b
[1] *Safety component acc. Article 1,2b*

Rechtsverbindliche Unterschrift:
Legally binding signature:

Dipl. Ing. Heinz Schmersal
(Geschäftsführer)
(Managing Director)

Elan Schaltelemente GmbH & Co.KG
Im Ostpark 2
D-35435 Wettenberg

Telefon +49 - (0)641 – 9848-0
Telefax +49 - (0)641 – 9848-420
E-Mail: info@elan.schmersal.de
Internet: http://www.elan.de

K.A. Schmersal GmbH
Industrielle Sicherheitsschaltsysteme
Möddinghofe 30, D-42279 Wuppertal
P.O. Box 240263, D-42232 Wuppertal

Phone: +49 (0)202 6474-0
Facsimile: +49 (0)202 6474-100
E-Mail: info@schmersal.com
Internet: www.schmersal.com

Production site:
Elan Schaltelemente GmbH & Co. KG
Im Ostpark 2, D-35435 Wettenberg
P.O. Box 1109, D-35429 Wettenberg

Phone: +49 (0)641 9848-0
Facsimile: +49 (0)641 9848-420
E-Mail: info@elan.schmersal.com
Internet: www.elan.de

1203576 470/08 02.06.08