

# ABB panel meter portfolio
## India & Global

Accurate electrical measuring and power monitoring

- Complete portfolio
- Simple and compact design
- Digital turnkey solution formonitoring, optimization and control
- Improve reactivity and reduce uncoordinated maintenance

**ABB’s energy efficiency product portfolio is the new, complete assortment of product range comprising of single function, multifunction, dual source, power metering and fully connected, state-of-the-art range of network analyzers, guaranteeing basic to complete power quality analysis and accurate energy efficiency monitoring of all the energy assets:industrial and commercial buildings, facilities, data centers.**

# Table of contents


04 Metering solutions from basic to advanced

08 M1 Single function, Multi-function & Dual source meters

16 M1M Power Meters

24 M4M Network Analyzers

# ABB Energy Efficiency Portfolio

## Metering solutions from basic to advanced

### Single function and Multi-function Metering solutions

ABB analog and digital single and multi-function instruments easily allow the monitoring of all the simplest electrical parameters.



Modular analog instruments



Front panel analog instruments



Front panel digital instruments



Modular digital instruments



M1A



M1V



M1M 10



M1M 11

### Basic Metering solutions

On top of the simplest measurements, ABB basic Multi-function meters also monitor Energy and Power. They are available with option for Modbus communication.



M1M 12



M1M DS



EQ meters C series



EQ meters B series

## Intermediate Metering solutions

Intermediate level solutions offer a wider range of measurements - including THD, Individual Harmonics and Unbalances - and functionalities - such as I/O, Timers, RTC and Alarms as optional choice.

## Advanced Metering solutions

M4M suits all power monitoring needs: from high-accuracy energy efficiency monitoring of electrical parameters to complete power quality analysis through advanced KPIs via cloud.




M1M 15



M4M 2X




M1M 20B




M1M 30B



M4M 20




EQ meters
B series




M1M 20




M1M 30



M4M 30




EQ meters
A series





CMS-700 Circuit
Monitoring System



CMS-600/660 Circuit
Monitoring System



SCU-100
InSite Pro



Digital
I/O modules

# Measurement made simple

Making difference with M1M range of meters in sub-distribution switchboards.




—
Commercial
Buildings

—
Industrial
Plants

—
Public
Buildings

# Measurement made simple

## Value proposition

**Simple to use**
- Intuitive visualization of the parameters on the bright LED display
- Enhanced clarity in data reading and device configuration

**Easy choice**
- Maximum 2 steps to select the correct product for your application

**Easy to install and stock**
- Compact product design and optimized volumetric weight of packaging
- No tools required for product mounting thanks to mounting clips

**System integration**
- Remote monitoring in any Modbus RTU supervision system thanks to the optional RS485 port




M1M DS

**Your benefits**

**For distributors**
- Save space needed for internal stock
- Fast selection of the correct product for your orders
- Handle a minimum set of order codes

**For panel builders**
- Reduce the time needed for meter installation on the panel
- Fast selection of the correct product for your application
- Increase the number of projects covered with the same product



# M1 Single Function Measurement Devices

## Features : M1A, M1V and M1M 11




—
1

**Intuitive visualization**
Clear and simple reading of the measurement data on the wide LED displays.

—
2

**Compact design**
Only 52mm inside the switchboard to ensure optimized logistics and reduced footprint in the panel.

—
3

**Electrical system monitoring**
Complete electrical parameters measurement, from simple VAF (voltage, current, frequency) to power and energy monitoring.

# M1 Multi-function and Dual Source Measurement Devices

## Features : M1M 10, M1M 12 and M1M DS




—
4

**Easy to use**
Simple front keypad to navigate in setup and menus.

—
5

**Remote measurement**
Availability of RS485 interface with the support of communication protocol Modbus RTU facilitating the communication and connection of the device with remote locations.

# Technical features



| **Product type** | | **Single Function and Multi-function meters M1M** | | | |
|---|---|---|---|---|---|
| **Product range** | | **M1A 1-1 Ammeter** | **M1A 3-1 Ammeter** | **M1A 3-05 Ammeter** | **M1V 1-1 Voltmeter** |
| Mounting | | Front Panel | Front Panel | Front Panel | Front Panel |
| Standards | IEC 62053-21/22 | # | # | # | # |
| | IEC 61557-12 PMD | – | – | – | – |
| | IEC 61000 4-2, 4-3, 4-4, 4-6, 4-8, 4-11 | – | – | – | – |
| | IEC 61010-1 | ■ | ■ | ■ | ■ |
| HMI | Display | LED | LED | LED | LED |
| Measurement | Accuracy Class | Class 1 | Class 1 | Class 0.5 | Class 1 |
| | Auxiliary Power Supply (80 - 300V AC/DC, L-N) | ■ | ■ | ■ | ■ |
| | Voltage measuement range | – | – | – | 300V Max. AC (L-N) |
| | Current Measurement range | 50mA - 6A | 50mA - 6A | 50mA - 6A | – |
| | Measurement via CT (…/1A or …/5A) | ■ | ■ | ■ | – |
| | Measurement via Rogowski coils | – | – | – | – |
| | Sample per cycle | 32 | 32 | 32 | 32 |
| Real-time | Current (I), Voltage (U, V), f | I | I | I | V |
| | Active Power (P), PF | – | – | – | – |
| | Reactive (Q), Apparent (S) Power | – | – | – | – |
| | Timers | – | – | – | – |
| Energy | Active energy | – | – | – | – |
| | Reactive, apparent energy | – | – | – | – |
| | 4 quadrants energy (import/export) | – | – | – | – |
| Power Quality | THD | – | – | – | – |
| | Harmonics | – | – | – | – |
| | Unbalances | – | – | – | – |
| | Neutral current | – | – | – | – |
| Logging | Alarms | – | – | – | – |
| | Complex alarms with logics | – | – | – | – |
| | Min/max/demand | – | – | – | – |
| | Flash memory | – | – | – | – |
| | RTC | – | – | – | – |
| | Graphs visualization | – | – | – | – |
| | Homepage and favourite page | – | – | – | – |
| HMI | Password protection | ■ | ■ | ■ | ■ |
| Communication | Standard I/O | – | – | – | – |
| | Additional I/O | – | – | – | – |
| | M-bus | – | – | – | – |
| | Modbus RTU | – | – | – | – |
| | Modbus TCP/IP | – | – | – | – |
| | Profibus DP-V0 | – | – | – | – |
| | BACnet/IP | – | – | – | – |
| | Bluetooth | – | – | – | – |
| | Automatic integration in System pro M compact® InSite | – | – | – | – |
| | Automatic integration in ABB Ability™ Energy and Asset Manager | – | – | – | – |
| | InSite-bus flat cable | – | – | – | – |

* Available starting from 2022 Q2. # Calibration document included in the product packaging.









| M1V 3-1- Voltmeter | M1V 3-05 Voltmeter | M1M 11-1 kWh | M1M 11-05 kWh | M1M 10 | M1M 12 | M1M DS Dual source |
|---|---|---|---|---|---|---|
| Front Panel | Front Panel | Front panel | Front panel | Front panel | Front panel | Front panel |
| # | # | # | # | # | # | # |
| – | – | – | – | – | – | – |
| – | – | – | – | – | – | – |
| ■ | ■ | ■ | ■ | ■ | ■ | ■ |
| LED | LED | LED | LED | LED | LED | LED |
| Class 1 | Class 0.5 | Class 1 | Class 0.5 | Class 1 | Class 1 | Class 0.5 |
| ■ | ■ | ■ | ■ | ■ | ■ | ■ |
| 300V Max. AC (L-N)<br>80-515V AC (L-L) | 300V Max. AC (L-N)<br>80-515V AC (L-L) | 300V Max. AC (L-N)<br>80-515V AC (L-L) | 300V Max. AC (L-N)<br>80-515V AC (L-L) | 300V Max. AC (L-N)<br>80-515V AC (L-L) | 300V Max. AC (L-N)<br>80-515V AC (L-L) | 300V Max. AC (L-N)<br>80-515V AC (L-L) |
| – | – | 50mA - 6A | 50mA - 6A | 50mA - 6A | 50mA - 6A | 50mA - 6A |
| – | – | ■ | ■ | ■ | ■ | ■ |
| – | – | – | – | – | – | – |
| 32 | 32 | 64 | 64 | 64 | 64 | 64 |
| V, f | V, f | – | – | ■ | ■ | ■ |
| – | – | – | – | – | ■ | ■ |
| – | – | Apparent | Apparent | – | – | Apparent |
| – | – | – | – | – | – | – |
| – | – | ■ | ■ | – | ■ | ■ |
| – | – | Apparent | Apparent | – | – | Apparent |
| – | – | – | – | – | – | – |
| – | – | – | – | – | – | – |
| – | – | – | – | – | – | – |
| – | – | – | – | – | – | – |
| – | – | – | – | – | – | – |
| – | – | – | – | – | – | – |
| – | – | – | – | – | – | – |
| – | – | – | – | – | – | – |
| – | – | – | – | – | – | – |
| – | – | – | – | – | – | – |
| – | – | – | – | – | – | – |
| ■ | ■ | ■ | ■ | ■ | ■ | ■ |
| – | – | – | – | – | – | – |
| – | – | – | – | – | – | – |
| – | – | – | – | – | – | – |
| – | – | ■ | ■ | – | ■ | ■ |
| – | – | – | – | – | – | – |
| – | – | – | – | – | – | – |
| – | – | – | – | – | – | – |
| – | – | – | – | – | – | – |
| – | – | * | * | – | * | * |
| – | – | * | * | – | * | * |
| – | – | – | – | – | – | – |

# M1 Single Function Measurement Devices M1A, M1V and M1M 11

## Ordering codes



M1A

### M1A

M1A is a digital ammeter for Current measurement, providing the measurement of the single-phase or three-phase Current and allowing easy replacement of different analog meters.

| Accuracy Class | Communication protocol and interface | Bbn EAN 8012542 | Order details Type code | Order code | Weight 1 piece kg | Pack unit pc. |
|---|---|---|---|---|---|---|
| Class 1 | - | - | M1A 1-1 Ammeter 1Ph | 1SYG235145R4051 | 0.19 | 1 |
| Class 1 | - | - | M1A 3-1 Ammeter 3Ph | 1SYG235135R4051 | 0.19 | 1 |
| Class 0.5 | - | - | M1A 3-05 Ammeter 3Ph | 1SYG234905R4051 | 0.19 | 1 |



M1V

### M1V

M1V is a digital voltmeter for Voltage (and Frequency) measurement, providing the measurement of the single-phase or three-phase Voltage as well as Frequency (for 3Ph Voltmeter) and allowing easy replacement of different analogue meters.

| Accuracy Class | Communication protocol and interface | Bbn EAN 8012542 | Order details Type code | Order code | Weight 1 piece kg | Pack unit pc. |
|---|---|---|---|---|---|---|
| Class 1 | - | - | M1V 1-1 Volt Meter 1Ph | 1SYG233965R4051 | 0.19 | 1 |
| Class 1 | - | - | M1V 3-1 Volt Meter 3Ph | 1SYG233955R4051 | 0.19 | 1 |
| Class 0.5 | - | - | M1V 3-05 Volt Meter 3Ph | 1SYG233695R4051 | 0.19 | 1 |



M1M 11

### M1M 11

M1M 11 is a digital kWH meter for energy measurement, providing the measurement of the single-phase and three-phase energy consumption.

| Accuracy Class | Communication protocol and interface | Bbn EAN 8012542 | Order details Type code | Order code | Weight 1 piece kg | Pack unit pc. |
|---|---|---|---|---|---|---|
| Class 1 | Modbus RTU RS485 | - | M1M 11-1 kWH Meter Modbus | 1SYG233685R4051 | 0.22 | 1 |
| Class 0.5 | Modbus RTU RS485 | - | M1M 11-05 kWH Meter Modbus | 1SYG232395R4051 | 0.22 | 1 |

# M1 Multi-function Measurement Devices M1M 10, M1M 12 and M1M DS
## Ordering codes




M1M 10

### M1M 10

M1M 10 is a VAF meter for basic electrical system monitoring, providing the measurement of the main single-phase and three-phase electrical parameters and allowing easy replacement of different analogue meters.

| Accuracy Class | Communication protocol and interface | Bbn EAN 8012542 | Order details Type code | Order code | Weight 1 piece kg | Pack unit pc. |
|---|---|---|---|---|---|---|
| Class 1 | - | 350811 | M1M 10-1 | 1SYG235081R4051 | 0.3 | 1 |




M1M 12

### M1M 12

M1M 12 is a Multi-function meter, providing what is needed to monitor the electrical system and allowing statistical metering of active energy consumption.

M1M 12 product range includes option with built-in communication protocol (Modbus RTU) through RS485 communication port, allowing easy integration with Modbus supervision systems.

| Accuracy Class | Communication protocol and interface | Bbn EAN 8012542 | Order details Type code | Order code | Weight 1 piece kg | Pack unit pc. |
|---|---|---|---|---|---|---|
| Class 1 | - | 075912 | M1M 12-1 | 1SYG207591R4051 | 0.3 | 1 |
| Class 1 | Modbus RTU RS485 | 075813 | M1M 12-1 Modbus | 1SYG207581R4051 | 0.3 | 1 |




M1M DS

### M1M DS

M1M DS is a digital dual source meter for the measurement of basic electrical parameters along with power parameters for two source measurement such as EB/DG.

| Accuracy Class | Communication protocol and interface | Bbn EAN 8012542 | Order details Type code | Order code | Weight 1 piece kg | Pack unit pc. |
|---|---|---|---|---|---|---|
| Class 0.5 | - | - | M1M DS-05 | 1SYG232385R4051 | 0.21 | 1 |
| Class 0.5 | Modbus RTU RS485 | - | M1M DS-05 Modbus | 1SYG232375R4051 | 0.21 | 1 |

# Dimension details

## M1A, M1V and M1M 11

**Overall dimensions**
All measurements in mm

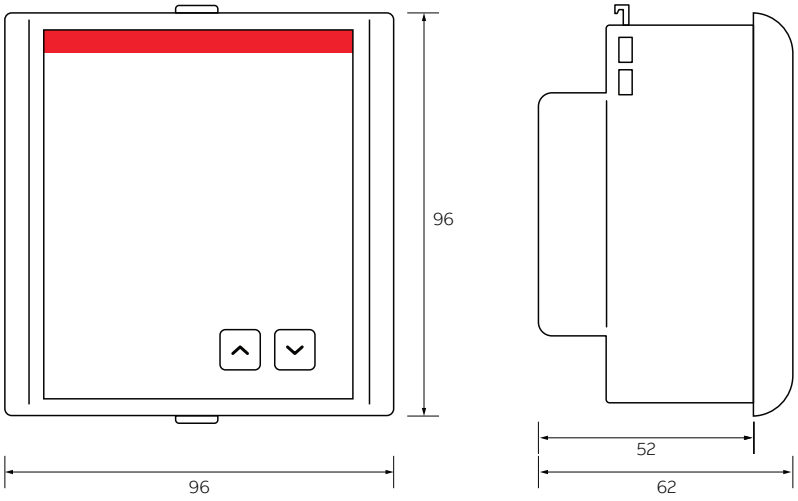


## M1M 10 and M1M 12

**Overall dimensions**
All measurements in mm

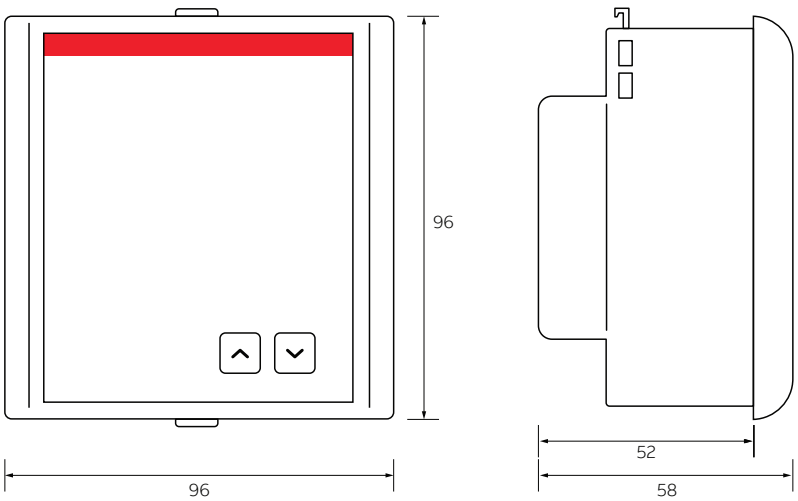

# Dimension details

## M1M DS

**Overall dimensions**
All measurements in mm

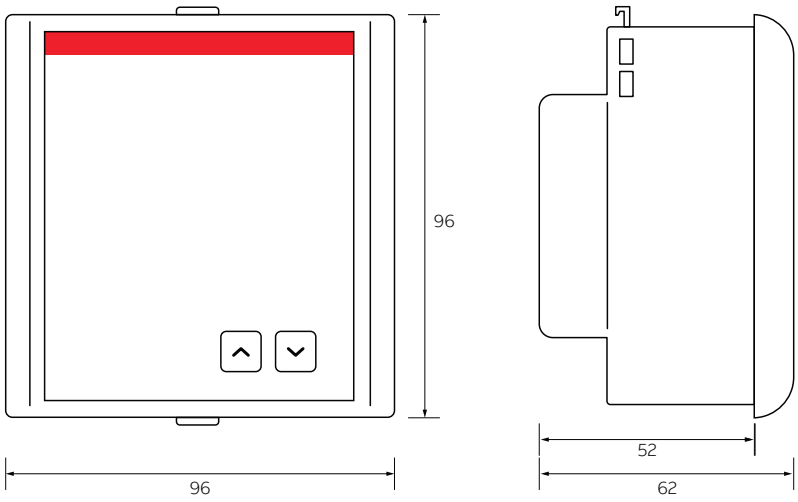

# M1M Power Meters

Introducing the new ABB power meters ranges M1M 15, M1M 20B, M1M 30B, M1M 20 and M1M 30 an easy solution for any standard application in buildings and industry.

M1M 15, M1M 20B, M1M 30B, M1M 20 and M1M 30 are the new ABB ranges of power meters, offering exactly what is needed to monitor the electrical system and analyze the power quality in a single device.

The new M1M power meters offer allows to easily and cost-effectively cover the main submetering and power quality monitoring requirements in commercial and industrial buildings, either small or mid/large-sized, e.g. inside power factor correction boards, motor control center or sub-distribution switchboards.

ABB's complete multifunction meters product line, now including M1M 15, M1M 20B, M1M 30B, M1M 20 and M1M 30 ranges, are capable to cover all needs, from basic electrical parameters measurement to advanced power quality analysis.

ABB's power meters are simple to use, with a common and intuitive user experience from installation to operations, allowing to fully exploit the reliable, IEC-compliant measurements.

Thanks to their connectivity capabilities, M1M can get leverage on the integration in ABB scalable energy and asset management solutions to monitor, optimize and control the complete electrical system, such as System pro M compact® InSite and ABB Ability™ Energy and Asset Manager cloud-computing platform.

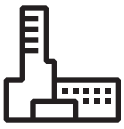

**Commercial Buildings**

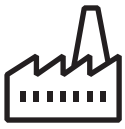

**Industrial Plants**



**Public Buildings**




M1M 15




M1M 20B




M1M 30B




M1M 20




M1M 30

# Measurement made simple

The complete M1M range, offering all the measurement features required for basic power quality monitoring and submetering in a single power meter; making measurement simple.

## Complete offer

**ABB meters to cover all needs**
Select in maximum 2 steps the right and most competitive power meter to cover all basic electrical system measurement needs. Thanks to integrated functionalities and communication protocols, the same product version fits an increased number of projects and wide applications range.

## Easy to use

**Common user experience**
Common and intuitive menu structure all over the different ranges on clear and large backlit LCD/ LED displays, helping to reduce the time needed to operate the power meters. Feedback on correct operations and quick reactivity on the system events are ensured by alarms icons and frontal LEDs on all product versions.

## Easy to install

**Optimized installation process**
Compact power meters, ensuring a very limited footprint inside the panel, provide a common, vertical disposition of the terminals for easy wiring of cables directly from the sides. No special tool is required for product mounting thanks to mounting clips.

## Energy Efficiency

**Reliable and accurate measurement**
Complete set of measurement functionalities, from Multi-function meters to intermediate power meters, compliant with accuracy standard IEC 61557-12 to allow improving energy efficiency of the electrical system. Remote communication on main communication protocol, Modbus RTU and Modbus TCP/IP.

**Your benefits**

**For distributors**
- Reduce selection time of the correct product thanks to reduced range complexity
- Manage a limited number of order codes from a single supplier
- Save space needed for internal stock
- Have the product on stock when needed and reduce delivery time

**For panel builders**
- 1 supplier only for all measurement products covering wide range of projects
- Increase competitiveness in projects
- Reduce time needed for product selection thanks to simple range composition
- Reduce time for installation and operations
- Minimum space requirements in the panel

# M1M Power Meters - features

## M1M 15, M1M 20B, M1M 30B, M1M 20 and M1M 30

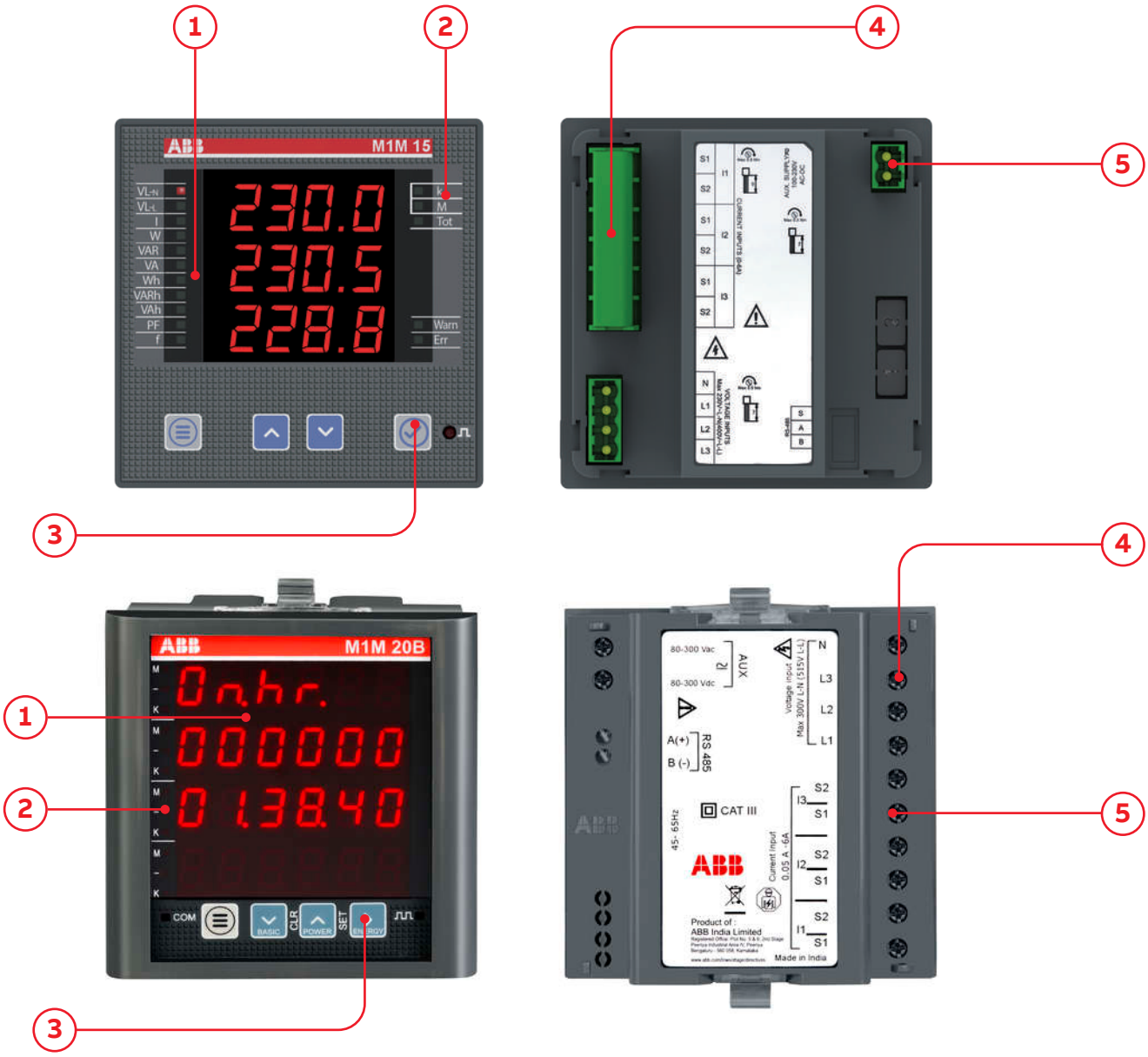


1
**Bright display**
Simple reading of the measurement data for all 3 phases on the wide LCD/LED display.

2
**Easy navigation**
LEDs on the sides to help during the navigation in the menu pages.

3
**Common experience**
Same intuitive menu structure all over the different M1M meters, with 4 pushbuttons keyboard for simplified access to the device.

4
**Electrical system monitoring**
Reliable electrical parameters measurement for basic applications compliant with IEC 61557-12, including voltage, current, frequency, power, energy.

5
**Comfortable wiring**
Vertical disposition of the removable terminals all over M1M range makes the cabling inside the switchboard easy to be completed.

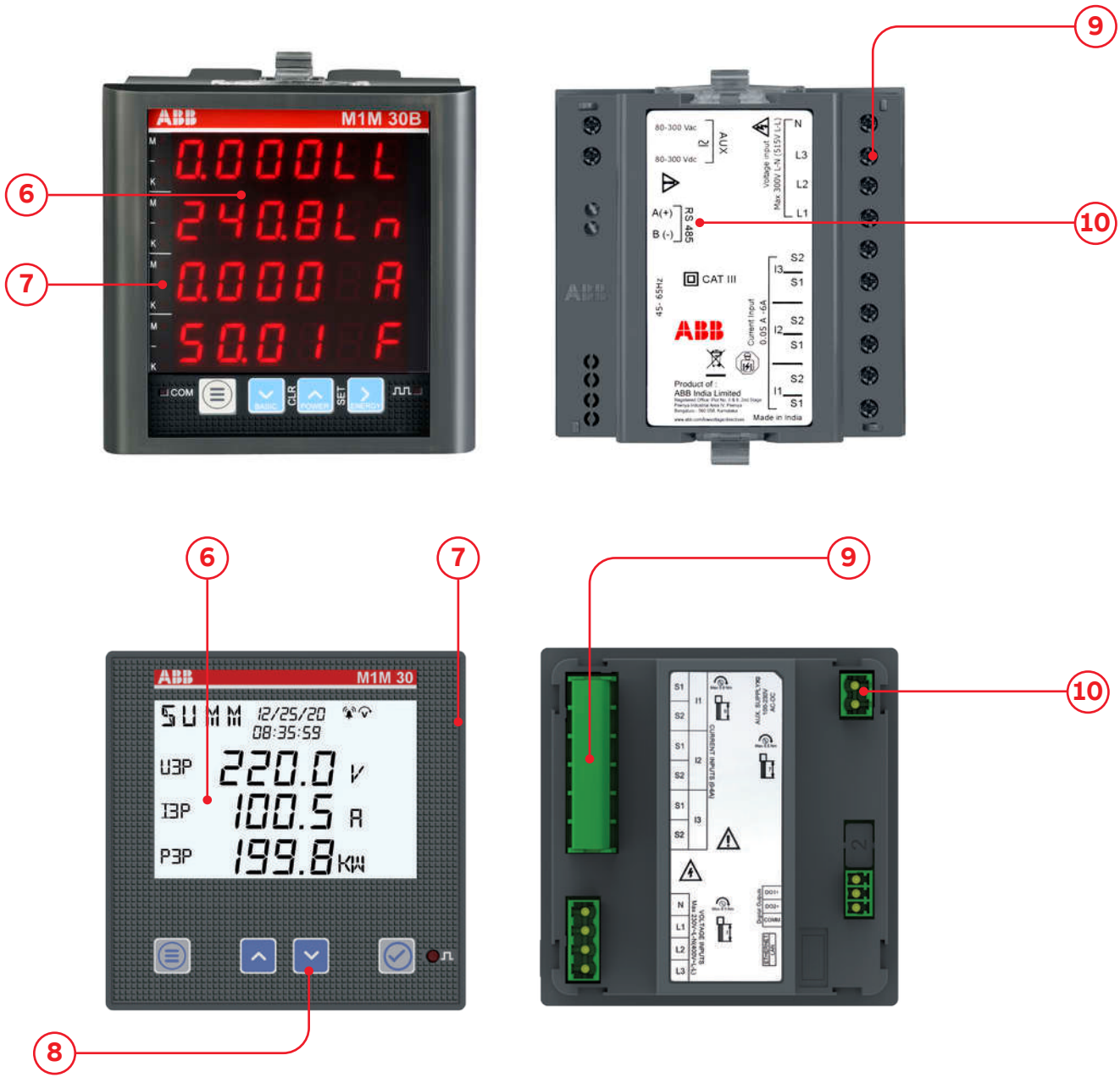


—
6
**Intuitive visualization**
Clear visualization of the measurements with self-guided menus on the bright backlit LCD/LED displays.

—
7
**Compact design**
Only 52mm inside the switchboard to ensure optimized logistics and reduced footprint in the panel.

—
8
**Manual-less configuration**
Guided wizard for first commissioning helping to save time for the basic configuration.

—
9
**Power quality measurement**
Complete set of power quality features according to IEC 61557-12, including main KPIs and datalogger functionality on flash memory.

—
10
**Remote measurement**
Availability of Modbus RTU and Modbus TCP/IP communication protocols and I/O options for easy integration in any system.

# Technical features










| **Product type** | | **Power meters M1M** | | |
|---|---|---|---|---|
| **Product range** | | **M1M 15** | **M1M 20B-1** | **M1M 20B-05** |
| **Mounting** | | **Front panel** | **Front panel** | **Front panel** |
| Standards | IEC 62053-21/22 | ■ | ■ | ■ |
| | IEC 61557-12 PMD | ■ | – | – |
| | IEC 61000 4-2, 4-3, 4-4, 4-6, 4-8, 4-11 | ■ | ■ | ■ |
| | IEC 61010-1 | ■ | ■ | ■ |
| HMI | Display | LED | LED | LED |
| Measurement | Accuracy Class | Class 1 | Class 1 | Class 0.5 |
| | Auxiliary Power Supply (L-N) | 100-230 V AC/DC ±15% | 80-300V AC/DC | 80-300V AC/DC |
| | Current Measurement range | 50mA - 6A | 50mA - 6A | 50mA - 6A |
| | Voltage measuement range | 80-265 VAC (L-N)<br>138-458 VAC (L-L) | 300V Max. AC (L-N)<br>80-515V AC (L-L) | 300V Max. AC (L-N)<br>80-515V AC (L-L) |
| | Measurement via CT (…/1A or …/5A) | ■ | ■ | ■ |
| | Measurement via Rogowski coils | – | – | – |
| | Sample per cycle | 128 | 128 | 128 |
| Real-time | Current (I), Voltage (U, V), f | ■ | ■ | ■ |
| | Active Power (P), PF | ■ | ■ | ■ |
| | Reactive (Q), Apparent (S) Power | ■ | ■ | ■ |
| | Timers | ■ | – | – |
| Energy | Active energy | ■ | ■ | ■ |
| | Reactive, Apparent energy | ■ | ■ | ■ |
| | 4 quadrants energy (import/export) | – | Delivered, Received | Delivered, Received |
| | Multi-tariffs | – | – | – |
| Power Quality | THD | – | ■ | ■ |
| | Individual Harmonics | – | – | |
| | Unbalances | – | ■ | ■ |
| | Neutral current | – | Calculated | Calculated |
| | Phasors, waveforms | – | – | – |
| Logging | Alarms | – | – | – |
| | Complex alarms with logics | – | – | – |
| | Min/max/demand | – | ■ | ■ |
| | Flash memory | – | – | – |
| | RTC | – | – | – |
| | Graphs visualization | – | – | – |
| | Homepage and favourite page | – | – | – |
| HMI | Password protection | ■ | ■ | ■ |
| Communication | Standard I/O | – | – | – |
| | Additional I/O | – | – | – |
| | M-bus | – | – | – |
| | Modbus RTU | ■ | ■ | ■ |
| | Modbus TCP/IP | | | – |
| | Profibus DP-V0 | – | – | – |
| | BACnet/IP | – | – | – |
| | Bluetooth | – | – | – |
| | Automatic integration in System pro M compact® InSite | * | * | * |
| | Automatic integration in ABB Ability™ Energy and Asset Manager | * | * | * |
| | InSite-bus flat cable | – | – | – |

* Available starting from 2022 Q2







| M1M 20B-02 | M1M 30B-05 | M1M 30B-02 | M1M 20 | M1M 30 |
|---|---|---|---|---|
| **Front panel** | **Front panel** | **Front panel** | **Front panel** | **Front panel** |
| ■ | ■ | ■ | ■ | ■ |
| – | – | – | ■ | ■ |
| ■ | ■ | ■ | ■ | ■ |
| ■ | ■ | ■ | ■ | ■ |
| LED | LED | LED | LCD | LCD |
| Class 0.2 | Class 0.5 | Class 0.2 | Class 1/Class 0.5 (IO Version) | Class 1/Class 0.5 (IO Version) |
| 80-300V AC/DC | 80-300V AC/DC | 80-300V AC/DC | 100-230 V AC/DC ±15% | 100-230 V AC/DC ±15% |
| 50mA - 6A | 50mA - 6A | 50mA - 6A | 50mA - 6A | 50mA - 6A |
| 300V Max. AC (L-N)<br>80-515V AC (L-L) | 300V Max. AC (L-N)<br>80-515V AC (L-L) | 300V Max. AC (L-N)<br>80-515V AC (L-L) | 80-265 VAC (L-N)<br>138-458 VAC (L-L) | 80-265 VAC (L-N)<br>138-458 VAC (L-L) |
| ■ | ■ | ■ | ■ | ■ |
| – | – | – | – | – |
| 128 | 128 | 128 | 128 | 128 |
| ■ | ■ | ■ | ■ | ■ |
| ■ | ■ | ■ | ■ | ■ |
| ■ | ■ | ■ | ■ | ■ |
| – | ■ | ■ | ■ | ■ |
| ■ | ■ | ■ | ■ | ■ |
| ■ | ■ | ■ | ■ | ■ |
| Delivered, Received | Delivered, Received,<br>Total,Net, Last cleared | Delivered, Received,<br>Total,Net, Last cleared | ■ | ■ |
| – | – | – | – | – |
| ■ | ■ | ■ | ■ | ■ |
| – | 31st | 31st | – | 40th |
| ■ | ■ | ■ | – | ■ |
| Calculated | Calculated | Calculated | Calculated | Calculated |
| – | – | – | – | – |
| – | – | – | 15 | 15 |
| – | – | – | – | – |
| ■ | ■ | ■ | – | Basic |
| – | – | – | – | ■ |
| – | ■ | ■ | – | ■ |
| – | – | – | – | – |
| – | – | – | – | – |
| ■ | ■ | ■ | ■ | ■ |
| – | – | – | – | 2 Digital Outputs |
| – | – | – | 2 Digital Inputs.<br>2 Digital Outputs | 2 Digital Inputs.<br>2 Digital Outputs |
| – | – | – | – | – |
| ■ | ■ | ■ | ■ | ■ |
| – | – | | ■ | ■ |
| – | – | – | – | – |
| – | – | – | – | – |
| – | – | – | – | – |
| * | * | * | ■ | ■ |
| * | * | * | ■ | ■ |
| – | – | – | – | – |

# M1M Power Meters
# M1M 15, M1M 20B, M1M 30B, M1M 20 and M1M 30
## Ordering codes



M1M 15

### M1M 15

M1M 15 is a complete multifunction meter for electrical system monitoring, mainly targeting measurement of basic electrical parameters and applications for cost allocation of energy consumptions.

| Accuracy Class | Communication Protocol | I/O | Bbn EAN 6941593 | Order details Type code | Order code | Weight 1 piece kg | Pack unit pc. |
|---|---|---|---|---|---|---|---|
| Class 1 | - | - | 406982 | M1M 15-1 | 2TAZ661010R2000 | 0.31 | 1 |
| Class 1 | Modbus RTU | - | 406999 | M1M 15-1 Modbus | 2TAZ661012R2000 | 0.31 | 1 |



M1M 20B

### M1M 20B

M1M 20B is a power meter including THD and import/export (4 quadrants) measurement for basic power quality analysis applications such as power factor management and local energy generation monitoring.

| Accuracy Class | Communication protocol and interface | I/O | Bbn EAN 8012542 | Order details Type code | Order code | Weight 1 piece kg | Pack unit pc. |
|---|---|---|---|---|---|---|---|
| Class 1 | Modbus RTU RS485 | - | - | M1M 20B-1 Modbus | 1SYG231445R4051 | 0.26 | 1 |
| Class 0.5 | Modbus RTU RS485 | - | - | M1M 20B-05 Modbus | 1SYG230355R4051 | 0.26 | 1 |
| Class 0.2 | Modbus RTU RS485 | - | - | M1M 20B-02 Modbus | 1SYG230295R4051 | 0.26 | 1 |


M1M 30B

### M1M 30B

M1M 30B is a power meter providing complete features in terms of power quality analysis such as measurement up to 31st harmonic allowing to target demand management applications.

| Accuracy Class | Communication protocol and interface | I/O | Bbn EAN 8012542 | Order details Type code | Order code | Weight 1 piece kg | Pack unit pc. |
|---|---|---|---|---|---|---|---|
| Class 0.5 | Modbus RTU RS485 | - | - | M1M 30B-05 Modbus | 1SYG230185R4051 | 0.27 | 1 |
| Class 0.2 | Modbus RTU RS485 | - | - | M1M 30B-02 Modbus | 1SYG229775R4051 | 0.27 | 1 |



M1M 20

### M1M 20

M1M 20 is a power meter including THD and import/export (4 quadrants) measurement for basic power quality analysis applications such as power factor management and local energy generation monitoring.

| Accuracy Class | Communication Protocol | I/O | Bbn EAN 6941593 | Order details Type code | Order code | Weight 1 piece kg | Pack unit pc. |
|---|---|---|---|---|---|---|---|
| Class 1 | - | - | 407002 | M1M 20-1 | 2TAZ662010R2000 | 0.31 | 1 |
| Class 1 | Modbus RTU | - | 407019 | M1M 20-1 Modbus | 2TAZ662012R2000 | 0.32 | 1 |
| Class 1 | Modbus TCP/IP | - | 407026 | M1M 20-1 Ethernet | 2TAZ662014R2000 | 0.33 | 1 |
| Class 0.5 | Modbus RTU | 2 Digital Out. 2 Digital In. | 407033 | M1M 20-05 I/O | 2TAZ662012R2001 | 0.33 | 1 |



M1M 30

### M1M 30

M1M 30 is a power meter providing complete features in terms of power quality analysis such as measurement up to 40th harmonic and internal memory for datalogging, allowing to target e.g. demand management applications.

| Accuracy Class | Communication Protocol | I/O | Bbn EAN 6941593 | Order details Type code | Order code | Weight 1 piece kg | Pack unit pc. |
|---|---|---|---|---|---|---|---|
| Class 1 | Modbus RTU | 2 Digital Out. | 407040 | M1M 30-1 Modbus | 2TAZ663012R2000 | 0.32 | 1 |
| Class 1 | Modbus TCP/IP | 2 Digital Out. | 407057 | M1M 30-1 Ethernet | 2TAZ663014R2000 | 0.34 | 1 |
| Class 0.5 | Modbus RTU | 2 Digital Out. 2 Digital In. | 407064 | M1M 30-05 I/O | 2TAZ663012R2001 | 0.33 | 1 |

# Dimension details

## M1M 20B and M1M 30B

**Overall dimensions**
All measurements in mm

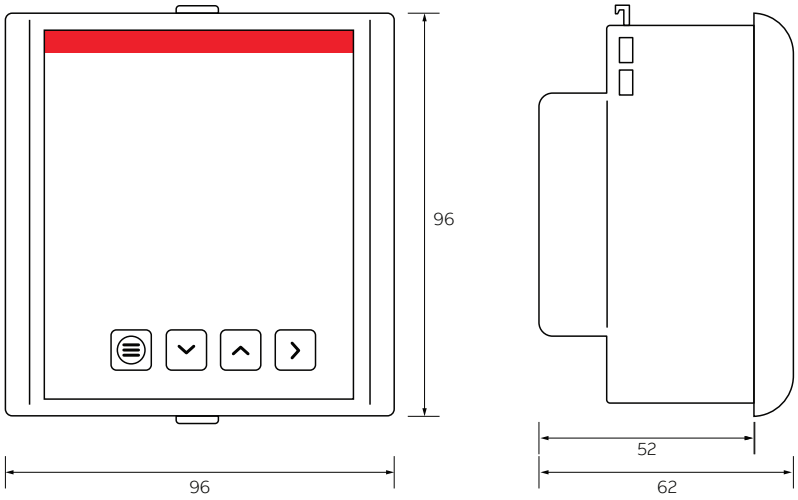


## M1M 15, M1M 20 and M1M 30

**Overall dimensions**
All measurements in mm

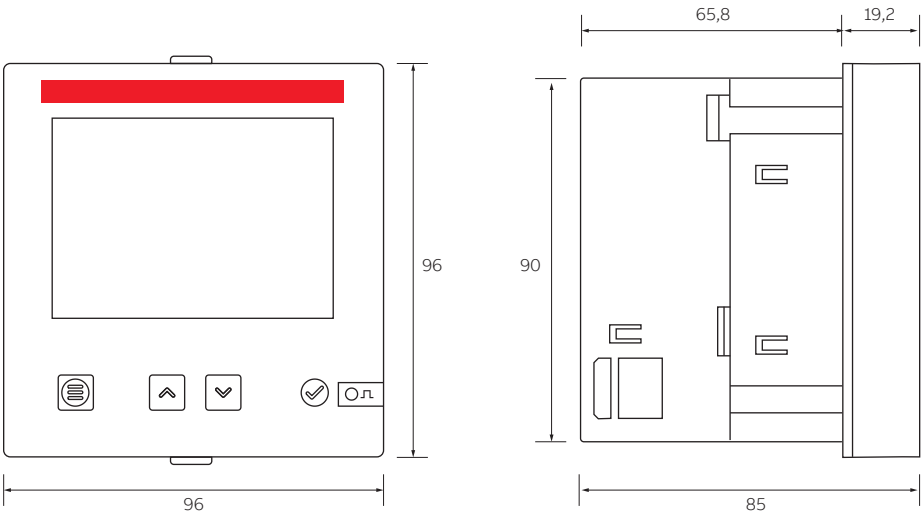

# M4M Network Analyzers
## Discover the benefits

M4M as a stand-alone network analyzer guarantees all power monitoring needs in the energy distribution system: from high-accuracy energy efficiency monitoring of electrical parameters to complete power quality analysis. Thanks to its connectivity capabilities, M4M can get leverage on the integration in ABB scalable energy and asset management solutions. Thanks to MID certification, M4M allows now to fulfill all legal requirements for accounting and energy acquisition.



—

-50% Time for integration in the ABB turnkey solution

**Full connectivity**
Natively integrated in sub-distribution management System pro M compact® InSite and ABB Ability™ Energy and Asset Manager cloud-solution, M4M benefits from the scalability of the ABB digital solutions: from stand-alone visualization and commissioning to monitoring, optimization and control of the complete electrical system.

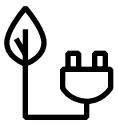

—

Reliable and accurate power monitoring

**Energy Efficiency**
ABB's M4M range of network analyzers gathers data from the electrical system and provides a complete power quality analysis and high accuracy energy monitoring.
MID certification available to ensure certified and tamper-proof measurement for billing applications and fulfilment of legal requirements for accounting and energy acquisition.



—

-40% Time for installation and commissioning

**Simple and Intuitive**
M4M makes configuration and operations simple and fast, from easy installation and wiring thanks to compact dimensions, all-removable terminals and Rogowski coils, to intuitive use and data access thanks to touchscreen color display, mobile APP and desktop software.



—

Improve reactivity and reduce uncoordinated maintenance

**Realtime supervision**
M4M netwoyk analyzers make information easy to access from any area of the system, providing a comprehensive range of accurate data and notifications that enhance reactivity to the events on the electrical system and allowing to avoid overloads, outages and uncoordinated maintenance.

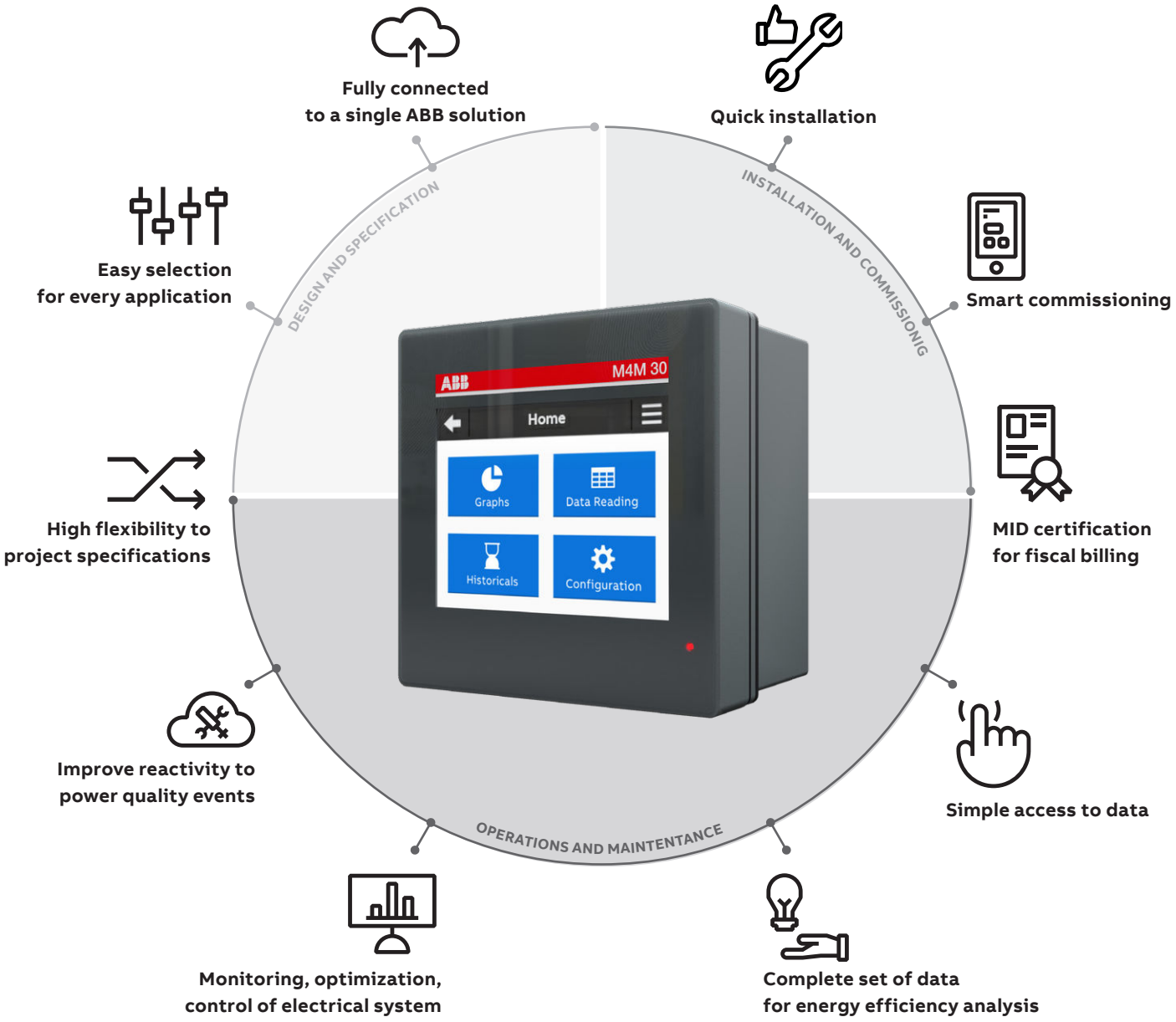
Fully connected
to a single ABB solution
Quick installation
Easy selection
for every application
Smart commissioning
DESIGN AND SPECIFICATION
INSTALLATION AND COMMISSIONIG
ABB
M4M 30
Home
Graphs
Data Reading
Historicals
Configuration
High flexibility to
project specifications
MID certification
for fiscal billing
Improve reactivity to
power quality events
Simple access to data
OPERATIONS AND MAINTENTANCE
Monitoring, optimization,
control of electrical system
Complete set of data
for energy efficiency analysis

# Explore the M4M ranges

M4M network analyzers are available in different versions which ensure all power monitoring needs, from basic to more complete power quality analysis.




EQUIPPED WITH GRAPHIC COLOR DISPLAY AND 5 PUSHBUTTONS KEYBOARD, M4M 20 RANGE ALLOWS COMPLETE MONITORING AND BASIC POWER QUALITY ANALYSIS.




EQUIPPED WITH TOUCHSCREEN COLOR DISPLAY, M4M 30 RANGE ALLOWS COMPLETE POWER QUALITY ANALYSIS AND ENERGY EFFICIENCY EVALUATIONS.



M4M 2X ON DIN-RAIL WITHOUT DISPLAY, ENSURING HIGH FLEXIBILITY TO PROJECT SPECIFICATIONS COMPARED TO STANDARD NETWORK ANALYZERS.

**MID-certification**
Availability of MID approval to ensure certified and tamper-proof measurement for billing applications.

**Graphic color display**
M4M 20 and M4M 30 are equipped with a graphic color display and common app-based menu for an intuitive visualization.

**Bluetooth-enabled**
All M4M network analyzers are equipped with Bluetooth module for smart commissioning via mobile app.

**Full communication**
A complete set of embedded communication protocols, including Modbus RTU, Modbus TCP/IP, Profibus DP-V0 and BACnet/IP

**Input/Output**
Control on the system thanks to I/O options including digital outputs, programmable I/O or programmable analogue outputs.

**Datalogger**
Data logging features are available, from complete notification logs to flash memory and RTC for 1-year data logging of trends.

**Rogowski version**
M4M Rogowski versions are compatible with ABB's R4M Rogowski coils for easy retrofit in existing installations.

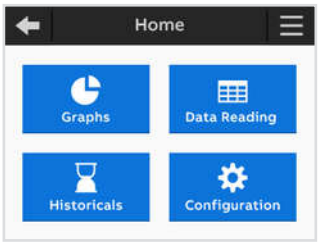


—
01

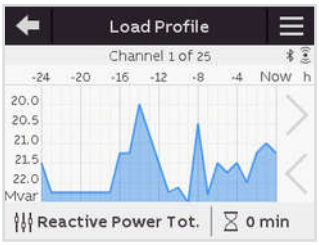


—
02



—
03



—
04

—
01 M4M Homepage

—
02 Trending graphs of load profiles

—
03 R4M Rogowski coils

—
04 M4M with MID certification

# Access to M4M network analyzers

M4M network analyzers offer the strongest scalability to access the measurement data, from color graphic display to smartphone app and desktop software, up to webserver and cloud-platform when integrated in the ABB digital solutions.

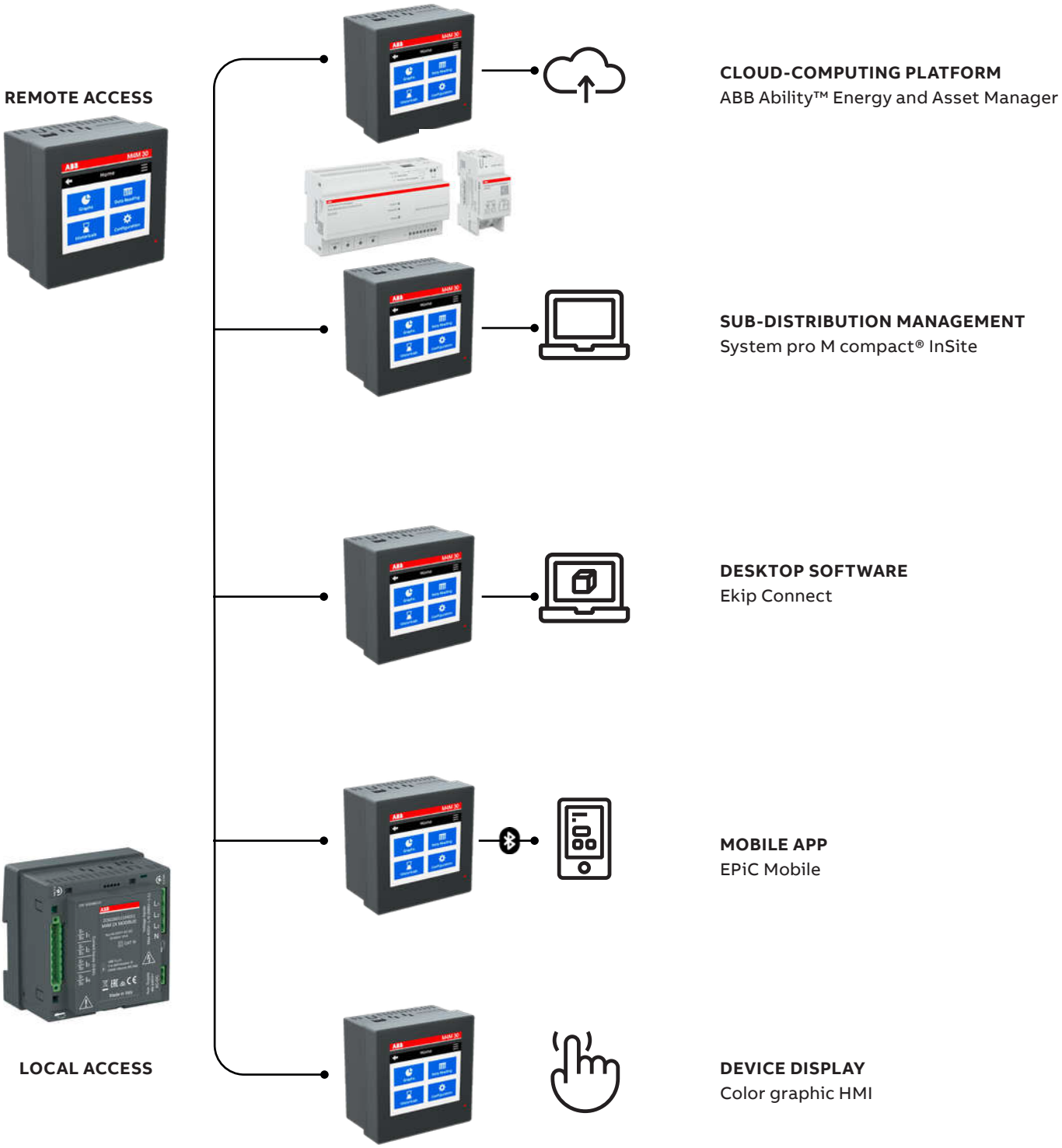

# M4M Network analyzers

## Accurate electrical measuring and power monitoring.

Simple in every aspect, M4M enables accurate energy efficiency evaluations and perfectly fits the ABB solution for monitoring, optimization and control of electrical system.

**Smart commissioning**
Bluetooth module for easy configuration through EPiC Mobile App unique commissioning tool.

**Accurate measurement**
Class 0,5 measurement according to IEC 61557-12 and advanced power quality functionalities, including historical measurements.

**Option for MID Approval**
Class C accuracy in accordance with 2014/32/EU for billing applications

**Clear visualization**
Color display and App-structured menu for advanced graphic visualization.




**Intuitive access**
Simplified access to the device via touch screen display or 5 pushbuttons keypad.

**Easy to install**
Fast one-hand mounting and comfortable installation with clips in only 57 mm depth inside the panel.

**Full communication**
ABB Ability™ native network analyzers with complete communication protocols and I/O options for integration in any system.




**Fast wiring**
All-removable terminals and one tool process to speed up the wiring activities.




**Intuitive interface**
Touchscreen display and easy-to-access App-structured menu make network analyzers' configuration and operation simple and quick. Graphic color display for advanced visualization of the Class 0,5S accurate parameters, interactive pop-ups and complete notifications. Quick navigation is ensured by Homepage and favorite page setting.

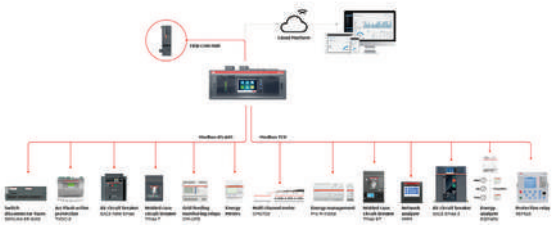

**Full integration**
Natively integrated in sub-distribution management System pro M compact InSite and ABB Ability™ Energy and Asset Manager cloud-solution. To allow monitoring, optimization and control of the complete electrical system.
Wide integration in all main applications through embedded communication protocols (Modbus RTU, Modbus TCP/IP, BACnet/IP, Profibus DP V0).






**Smart commissioning**
All M4M network analyzers are equipped with Bluetooth BLE module, ensuring smart configuration and quick visualization via unique EPiC commissioning tool, both available as mobile App and desktop software. Availability of remote firmware update regularly at any time guarantees the latest and the most secure version of the device  with no impact on operations.



**Installation in any panel**
Comfortable installation and secure fix on the panel is ensured by the easy-to-use clips, with different thickness setup for compatibility with any panel. One-hand mounting of the device thanks to the hooks on the housing.
The reduced depth of only 57 mm inside the panel makes M4M suitable even in small-size switchboards.




**Fast installation and wiring**
All terminals on M4M are removable, including the current transformers (CTs) inputs for current measurement, allowing to carry out the wiring directly on the terminals and speeding up the process. Moreover, the vertical disposition of the terminals makes the cabling inside the switchboard more comfortable.




**Rogowski coils compatibility**
Specific M4M versions compatible with ABB's R4M Rogowski coils allow to retrofit in existing installations, integrating power quality metering with 0 downtime. The pre-wired terminals of R4M coils allow to save up to 70% time for current transformers cabling compared to standard CTs.

# Technical features



**M4M 20**



**M4M 30**



**M4M 2X**

| | | | | |
|---|---|---|---|---|
| **Auxiliary power supply** | | | | |
| Voltage range | [V] | 48 - 240 V AC/VDC ±15 % | | |
| Frequency | [Hz] | 50 - 60 | | |
| Power consumption | [VA] | 10 VA max | | |
| Installation category | | CAT III 300V class per IEC 61010-1 edition 3 | | |
| Protection fuse | | T1 A - 277 VAC | | |
| **Measurement accuracy** | | | | |
| Measurement type | | True RMS up to the 40th harmonic | | |
| | | 128 samples per cycle, zero blind | | |
| IEC 61557-12 | | IEC 61557-12 PMD/S/K70/0,5 | | |
| Active energy | | Class 0,5 acc. to IEC 61557-12 [*] | | |
| | | Class 0,5S acc. to IEC 62053-22 | | |
| Reactive energy | | Class 2 acc. to IEC 61557-12 | | |
| | | Class 2S acc. to IEC 62053-23 | | |
| Active power | | Class 0,5 acc. to IEC 61557-12 | | |
| Reactive power | | Class 2 acc. to IEC 61557-12 | Class 1 acc. to IEC 61557-12 | Class 1 acc. to IEC 61557-12 |
| Apparent power | | Class 0,5 acc. to IEC 61557-12 | | |
| Voltage | | Class 0,2 acc. to IEC 61557-12 | | |
| Current | | Class 0,2 acc. to IEC 61557-12 | | |
| Neutral current | | Calculated | Class 0,2 acc. to IEC 61557-12 | Calculated (2X, 2X PQ1, 2X RTS) Class 0,2 acc. to IEC 61557-12 (2X PQ2) |
| Frequency | | Class 0,1 acc. to IEC 61557-12 | | |
| Unbalances (Current, Voltage) | | Class 0,2 acc. to IEC 61557-12 | | |
| Harmonics, THD (Current, voltage) | | Class 1 acc. to IEC 61557-12 | | |
| **Voltage measurement inputs** | | | | |
| Measurement range | [V] | 50 - 400 V AC (L-N) 87 - 690 V AC (L-L) | | |
| Measurement category | | 400V~ (CAT III) | | |
| Rated frequency | [Hz] | 50/60 Hz | | |
| Max. VT Primary (indirect connection) | [V] | 500 kV AC (L-N) | | |
| Max over voltage | [V] | 800 V AC (L-L) | | |
| Protection fuse | [V] | T1 A - 277 V AC | | |
| **Insulation characteristics** | | | | |
| Test Voltage impulse @230V to accessible parts | | 6,4 kV 1,2/50 µS | | |
| Test Voltage impulse @400V to accessible parts | | 9 kV 1,2/50 µS | | |
| Test Voltage @230V to accessible parts | | 3 kV 60s @2000m | | |
| Test Voltage @400V to accessible parts | | 3,6 kV 60s @2000m | | |
| **Current measurement inputs** | | | | |
| Number of current inputs | | 3 (L1, L2, L3) | 4 (L1, L2, L3, N) | 3 (2X, 2X PQ1, 2X RTS), 4 (2X PQ2) |








| | M4M 20 | M4M 30 | M4M 2X |
|---|---|---|---|
| **Indirect insertion with CT** | | | |
| CT rated secondary current | 5 A (Class 0,5S) | | |
| | 1 A (Class 0,5S) | | |
| Max primary CT | 50kA | | |
| Measurement range without accuracy derating | 10 mA - 6 A | | |
| Starting current | 1 mA | | |
| Burden | 0,024 VA at 6 A | | |
| **Indirect insertion with Rogowski coils** | **M4M 20 Rogowski** | **M4M 30 Rogowski** | **-** |
| Rated current | 10.000 A | | - |
| Measurement range without accuracy derating | 100 A - 12 kA | | - |
| Length of coils connections cable to M4M | 3m | | |
| Starting current [A] | 10 A | | - |

**I/O**

| | | | |
|---|---|---|---|
| **Digital Output** | | | |
| Voltage (min - max) | 5 - 240 V AC/DC | | |
| Current (min - max) | 2 - 100 mA | | |
| Max ON state drop voltage | 1,5 V | | |
| Max R value at Min voltage conditions (5 V) | 1750 Ohm | | |
| Min R value at Max voltage conditions (240 V) | 2400 Ohm | | |
| Pulse duration [ms] | 20 ms ON, 20 ms OFF | | |
| Pulse frequency | 25 Hz | | |
| Alarm activation delay [s] | 1 - 900 s (programmable) | | |
| Alarm return hysteresis | 0 - 40 % (programmable) | | |

| | | | |
|---|---|---|---|
| **Digital Input** | | | |
| Maximum voltage | 240 V AC/DC | | |
| Max voltage for OFF state on input | 20 V AC/DC | | |
| Min voltage for ON state on input | 45 V AC/DC | | |

| | | | |
|---|---|---|---|
| **Analogue Output** | | | |
| Programmable electrical span | Span [0 - 20 mA or 4 - 20 mA] | | - |
| Load | Typical 250 Ohm, max 500 Ohm | | - |

| | | | |
|---|---|---|---|
| **Technical data for MID version** | **M4M 20-M** | **M4M 30-M** | **-** |
| MID standards | EN 50470-1, EN 50470-3 | | |
| Voltage measurement (type of network and rated voltage) | 3Ph/4W - 3Ph/3W - 1Ph/2W, 3x230/400...3x400/690V | | |
| Current rating (I min- I ref(Imax)) | 0,01-1(6) A | | |
| Rated frequencies | 50 Hz and 60 Hz | | |
| Active Energy accuracy class | Class C | | |
| Pulse value S0 (pulse constant) | 200000 imp/kWh | | |
| Electromagnetic ambient conditions | Class E2 | | |
| Mechanical ambient conditions | Class M1 | | |
| LED indicator pulse frequency [s] | 200000 imp/kWh | | |
| LED indicator pulse length | 1ms | | |

# Technical features



**M4M 20**



**M4M 30**



**M4M 2X**

| | | | |
|---|---|---|---|
| **Mechanical characteristics** | | | |
| Overall dimensions | 96 mm x 96 mm x 77 mm<br>(Depth inside the switchboard: 57 mm ) | | 96 mm x 96 mm x 77 mm<br>(DIN-rail mounting) |
| IP degree of protection (acc. to IEC 60529) | Front: IP54 | | - |
| | Terminals: IP20 | | |
| Weight [g] | 400 | | |
| **Terminal characteristics** | | | |
| Voltage inputs | Nominal cross section: 2,5 mm²<br>Solid/stranded wire: 0,2 - 2,5 mm² (AWG 24 - 12)<br>Pitch: 7,62 mm<br>Poles: 4 | | |
| Current inputs | Nominal cross section:<br>2,5 mm²<br>Solid/stranded wire:<br>0,2 - 2,5 mm²<br>(AWG 24 - 12)<br>Pitch: 5,08 mm<br>Poles: 6<br>Screw flanges for fixing | Nominal cross section: 2,5 mm²<br>Solid/stranded wire: 0,2 - 2,5 mm² (AWG 24 - 12)<br>Pitch: 5,08 mm<br>Poles: 8<br>Screw flanges for fixing | |
| RS-485 Serial port | Nominal cross section: 2,5 mm²<br>Solid/stranded wire: 0,2 - 2,5 mm² (AWG 24 - 12)<br>Pitch: 5,08 mm<br>Poles: 3 | | |
| I/O | Nominal cross section:<br>2,5 mm²<br>Solid/stranded wire:<br>0,2 - 2,5 mm²<br>(AWG 24 - 12)<br>Pitch: 5,08 mm<br>Poles: 3 (Programmable I/O, only on M4M 20 I/O)<br>Poles: 3 (Digital outputs)<br>Poles: 3 (Analogue outputs, only on M4M 20 I/O) | Nominal cross section:<br>2,5 mm²<br>Solid/stranded wire:<br>0,2 - 2,5 mm²<br>(AWG 24 - 12)<br>Pitch: 5,08 mm<br>Poles: 5 (Programmable I/O)<br>Poles: 3 (Programmable I/O only on M4M 30 I/O)<br>Poles: 3 (Analogue outputs, only on M4M 30 I/O) | Nominal cross section:<br>2,5 mm²<br>Solid/stranded wire:<br>0,2 - 2,5 mm²<br>(AWG 24 - 12)<br>Pitch: 5,08 mm<br>Poles: 5 (Programmable I/O) |
| Rogowski current probes | Only with ABB Rogowski probes:<br>- R4M-200 2CSG202150R1101 (200 mm diameter)<br>- R4M-80 2CSG202160R1101 (80 mm diameter) | | - |
| **Climatic conditions** | | | |
| Operating temperature | -25 to 70 °C (K70 acc. to IEC 61557-12) | | |
| Storage temperature | -40 to 85 °C (K70 acc. to IEC 61557-12) | | |
| Relative humidity | Max 93 % (non-condensing) at 40 °C | | |
| Pollution degree | 2 | | |
| Altitude | < 2.000 m | | |
| **User Interface** | | | |
| Access to device | 5 pushbuttons | Touchscreen | - |
| Display type | Graphic color display | | - |
| Display dimensions | 70 x 52 mm (3.5") | | - |



**M4M 20**



**M4M 30**



**M4M 2X**

| | | | |
|---|---|---|---|
| **Communication protocol** | | | |
| **Modbus RTU** | **M4M 20 Modbus, M4M 20 I/O, M4M 20 Rogowski, M4M 20-M Modbus** | **M4M 30 Modbus, M4M 30 I/O, M4M 30 Rogowski, M4M 30-M Modbus** | **M4M 2X Modbus** |
| Communication interface | RS485 with optical isolation | | |
| Baud rate | 9600, 19200, 38400, 57600, 115200 bps | | |
| Parity number | Odd, Even, None | | |
| Stop bit | 1, 2 | | |
| Address | 1-247 | | |
| Connector | 3 pole terminal | | |
| **Profibus DP-V0** | **M4M 20 Profibus** | **M4M 30 Profibus** | **-** |
| Protocol | Profibus with slave DP-V0 function in compliance with IEC 61158 regulations | | - |
| Communication interface | RS485 with optical isolation | | - |
| Baud rate | Automatic detection [9,6 kpbs - 12 Mbps] | | - |
| Address | 0-126 | | - |
| Connector | DB 9 female connector (do not use connectors with 90° cable outlet) | | - |
| LED indicators | Green for communication status | | - |
| | Red for communication error | | - |
| **Modbus TCP/IP** | **M4M 20 Ethernet, M4M 20-M Ethernet** | **M4M 30 Ethernet, M4M 30-M Ethernet** | **M4M 2X Ethernet** |
| Protocol | Modbus TCP/IP | | |
| Communication interface | RJ45 | RJ45 (2 ports for daisy-chain)* | |
| **BACnet** | **M4M 20 Bacnet** | **M4M 30 Bacnet** | **-** |
| Protocol | BACnet/IP | | - |
| Communication interface | RJ45 | | - |
| **Bluetooth** | | | |
| Type | BLE (Bluetooth Low Energy) | | |
| **Real-time clock** | | | Available on 2X PQ1, 2X PQ2, 2X RTS |
| Clock drift | - | ~ 0,4 seconds per day | |
| Battery backup time | - | ~ 3 days without aux supply | |
| **Standards** | | | |
| Power metering and monitoring devices (PMD) | IEC 61557-12 (IEC 62053-22, IEC 62053-23) | | |
| Electrical safety | IEC 61010-1 | | |
| EMC | IEC 61326-1 (IEC 61000-3-2, IEC 61000-3-3, IEC 61000-4-2, IEC 61000-4-3, IEC 61000-4-4, IEC 61000-4-5, IEC 61000-4-6, IEC 61000-4-8, IEC 61000-4-11) | | |

* 1x RJ45 port available on M4M 30-M

# M4M 20 and M4M 30
## Comparing the two versions






| **Accuracy** | **M4M 20** - Class 0,5S | **M4M 30** - Class 0,5S |
|---|---|---|
| **MID approval** | Optional | Optional |
| **Real-time** | | |
| TRMS current | ● | ● |
| TRMS voltage | ● | ● |
| Frequency | ● | ● |
| Active, Reactive and Apparent power | ● | ● |
| Power factor | ● | ● |
| Operating timer, countdown timer | ● | ● |
| **Energy** | | |
| Active, Reactive and Apparent energy | ● | ● |
| 4 quadrants Energy (Import/Export) | ● | ● |
| Tariffs | / | ● |
| **Power Quality** | | |
| THD (I, VLN, VLL) | ● | ● |
| Individual Harmonics | / | 40$^{th}$ |
| Unbalances (I, VLN, VLL) | / | ● |
| Neutral current | Calculated | Measured |
| Phasors (I, VLN) | / | ● |
| Waveforms (I, VLN, VLL) | / | ● |
| **Data recording and logs** | | |
| Single alarms | 25 | 25 |
| Warnings, alarms and errors logs | ● | ● |
| Complex alarms with logics | / | 4 |
| Demand values (average) | Basic | Advanced |
| Min/Max Demand values | Basic | Advanced |
| Energy Trending logs | / | ● |
| RTC | / | ● |
| **HMI** | **Graphic color** | **Graphic color touchscreen** |
| Graphs visualization | Basic | Advanced |
| Notifications | ● | ● |
| Homepage and favourite page | ● | ● |
| Password protection | ● | ● |
| **Connectivity** | | |
| Automatic integration in ABB Ability™ Energy and Asset Manager | ● | ● |
| Automatic integration in System pro M compact InSite | ● | ● |
| Bluetooth Low Energy | ● | ● |
| Communication Protocols | Modbus RTU, Modbus TCP/IP, Profibus DP-V0, BACnet/IP | Modbus RTU, Modbus TCP/IP, Profibus DP-V0, BACnet/IP |
| RJ45 Daisy Chain (Ethernet version) | / | ●* |

* daisy chain not available on M4M 30-M

# M4M 2X
## Functionality packages



| Accuracy | **M4M 2X** - Class 0,5S |
|---|---|
| TRMS current | ● |
| TRMS voltage | ● |
| Frequency | ● |
| Active, Reactive and Apparent power | ● |
| Power factor | ● |
| Operating timer, countdown timer | ● |
| Active, Reactive and Apparent energy | ● |
| 4 quadrants Energy (Import/Export) | ● |
| THD (I, VLN, VLL) | ● |
| Neutral current | Calculated |
| Single alarms | 25 |
| Demand values (average) | Basic |
| Max/min values | Basic |
| Warnings, alarms and errors logs | ● |
| Digital Outputs | 2 |
| **+PQ1** | |
| Individual Harmonics | 25th |
| Unbalances | ● |
| Historicals logs | Intermediate |
| RTC | ● |
| **+PQ2** | |
| Individual Harmonics | 40th |
| Unbalances | ● |
| Historicals logs | Advanced |
| RTC | ● |
| Neutral current | Measured |
| **+RTS** | |
| Tariffs | 6 |
| Complex alarms with logics | 4 |
| RTC | ● |
| Programmable I/O [1] | 4 |
| **Connectivity** | |
| Automatic integration in ABB Ability™ Energy and Asset Manager | ● |
| Automatic integration in System pro M compact InSite | ● |
| Bluetooth Low Energy | ● |
| Communication Protocols | Modbus RTU, Modbus TCP/IP |
| RJ45 Daisy Chain (Ethernet version) | ● |

[1] instead of 2 Digital Outputs

# Ordering codes




**M4M 20**

M4M 20 is ABB's network analyzer range that provides complete and accurate electrical parameters monitoring and basic power quality analysis.

Equipped with graphic color display for advanced visualization of the measured parameters and Bluetooth module for smart commissioning.

| Communication protocol | I/O | Bbn 8012542 EAN | Order details | | Weight 1 piece kg | Pack unit pc. |
|---|---|---|---|---|---|---|
| | | | Type code | Order code | | |
| BLE | 2 Digital out. | 511519 | M4M 20 | 2CSG251151R4051 | 0,400 | 1 |
| BLE, Modbus RTU | 2 Digital out. | 511410 | M4M 20 Modbus | 2CSG251141R4051 | 0,400 | 1 |
| BLE, Modbus TCP/IP | 2 Digital out. | 044710 | M4M 20 Ethernet | 2CSG204471R4051 | 0,400 | 1 |
| BLE, Profibus DP-V0 | 2 Digital out. | 511311 | M4M 20 Profibus | 2CSG251131R4051 | 0,400 | 1 |
| BLE, BACnet/IP | 2 Digital out. | 368311 | M4M 20 Bacnet | 2CSG236831R4051 | 0,400 | 1 |
| BLE, Modbus RTU | 2 Progr. I/O, 2 Digital out., 2 Analogue out. | 511618 | M4M 20 I/O | 2CSG251161R4051 | 0,400 | 1 |
| MID BLE, Modbus RTU | 2 Digital Out. | 390558 | M4M 20-M MODBUS | 2CSG239055R4051 | 0,400 | 1 |
| MID BLE, Modbus TCP/IP | 2 Digital Out. | 390657 | M4M 20-M ETHERNET | 2CSG239065R4051 | 0,400 | 1 |



**M4M 20 - ROGOWSKI VERSION**

M4M 20 is also available as compatible with ABB's R4M Rogowski coils for current measurement, increasing the flexibility of network analyzers offer and allowing retrofit in any existing installations.

M4M 20 Rogowski together with R4M Rogowski coils ensures the integration of basic power quality metering in any existing system with 0 downtime.

| Communication protocol | I/O | Bbn 8012542 EAN | Order details | | Weight 1 piece kg | Pack unit pc. |
|---|---|---|---|---|---|---|
| | | | Type code | Order code | | |
| BLE, Modbus RTU | 2 Digital Outputs | 070818 | M4M 20 Rogowski | 2CSG207081R4051 | 0,400 | 1 |

# Ordering codes



### M4M 30

M4M 30 is ABB's network analyzer range that allows complete power quality analysis and energy efficiency evaluations.

Equipped with touchscreen color display for simplified access to the device and with Bluetooth module for smart commissioning.

| Communication protocol | I/O | Bbn 8012542 EAN | Order details | | Weight 1 piece kg | Pack unit pc. |
|---|---|---|---|---|---|---|
| | | | Type code | Order code | | |
| BLE, Modbus RTU | 4 Progr. I/O | 747611 | M4M 30 Modbus | 2CSG274761R4051 | 0,400 | 1 |
| BLE, Modbus TCP/IP | 4 Progr. I/O | 746812 | M4M 30 Ethernet | 2CSG274681R4051 | 0,400 | 1 |
| BLE, Profibus DP-V0 | 4 Progr. I/O | 367918 | M4M 30 Profibus | 2CSG236791R4051 | 0,400 | 1 |
| BLE, BACnet/IP | 4 Progr. I/O | 024514 | M4M 30 Bacnet | 2CSG202451R4051 | 0,400 | 1 |
| BLE, Modbus RTU | 6 Progr. I/O, 2 Analogue out. | 024712 | M4M 30 I/O | 2CSG202471R4051 | 0,400 | 1 |
| MID BLE, Modbus RTU | 4 programmable I/O | 390350 | M4M 30-M MODBUS | 2CSG239035R4051 | 0,400 | 1 |
| MID BLE, Modbus TCP/IP | 4 programmable I/O | 390459 | M4M 30-M ETHERNET | 2CSG239045R4051 | 0,400 | 1 |



### M4M 30 - ROGOWSKI VERSION

M4M 30 is also available as compatible with ABB's R4M Rogowski coils for current measurement, increasing the flexibility of network analyzers and allowing retrofit in any existing installations. M4M 30 Rogowski together with R4M coils ensure integration of complete PQ analysis in any existing system with 0 downtime.

| Communication protocol | I/O | Bbn 8012542 EAN | Order details | | Weight 1 piece kg | Pack unit pc. |
|---|---|---|---|---|---|---|
| | | | Type code | Order code | | |
| BLE, Modbus RTU | 4 Prog. I/O | 024613 | M4M 30 Rogowski | 2CSG202461R4051 | 0,400 | 1 |



### R4M ROGOWSKI COILS

R4M Rogowski coils are flexible current transformer based on Rogowski technology, ideal to retrofit existing installa-tions up to 12kA. Available in two different sizes (80mm or 200mm diameters), R4M coils are directly equipped with pre-wired removable terminals that perfectly fit M4M 20 Rogowski (3 Rogowski coil inputs) and M4M 30 Rogowski (4 Rogowski coil inputs), with no need for external integrators.

| Diameter (mm) | Bbn 8012542 EAN | Order details | | Weight 1 piece kg | Pack unit pc. |
|---|---|---|---|---|---|
| | | Type code | Order code | | |
| 80 | 021605 | R4M-80 | 2CSG202160R1101 | 0,150 | 1 |
| 200 | 021506 | R4M-200 | 2CSG202150R1101 | 0,250 | 1 |

# Ordering codes



**M4M 2X**

M4M 2X is ABB's network analyzer range that ensuring higher flexibility to project specifications compared to standard network analyzers. M4M 2X is available without display, only communicating via protocols and Bluetooth module for smart remote commissioning.

| Communication protocol | I/O | Functionality package | Bbn 8012542 EAN | Order details | | Weight 1 piece kg | Pack unit pc. |
|---|---|---|---|---|---|---|---|
| | | | | Type code | Order code | | |
| BLE, Modbus RTU | 2 Digital out. | 2X | 601111 | M4M 2X Modbus | 2CSG260111R4051 | | |
| BLE, Modbus TCP/IP | 2 Digital out. | 2X | 600619 | M4M 2X Ethernet | 2CSG260061R4051 | | |
| BLE, Modbus RTU | 2 Digital out. | 2X+PQ1 | 390756 | M4M 2X Modbus PQ1 | 2CSG239075R4051 | | |
| BLE, Modbus TCP/IP | 2 Digital out. | 2X+PQ1 | 391258 | M4M 2X Ethernet PQ1 | 2CSG239125R4051 | | |
| BLE, Modbus RTU | 2 Digital out. | 2X+PQ2 | 390855 | M4M 2X Modbus PQ2 | 2CSG239085R4051 | | |
| BLE, Modbus TCP/IP | 2 Digital out. | 2X+PQ2 | 391357 | M4M 2X Ethernet PQ2 | 2CSG239135R4051 | | |
| BLE, Modbus RTU | 4 Progr. I/O | 2X+RTS | 390954 | M4M 2X Modbus RTS | 2CSG239095R4051 | | |
| BLE, Modbus TCP/IP | 4 Progr. I/O | 2X+RTS | 391456 | M4M 2X Ethernet RTS | 2CSG239145R4051 | | |
| BLE, Modbus RTU | 4 Progr. I/O | 2X+PQ1+RTS | 391050 | M4M 2X Modbus PQ1+RTS | 2CSG239105R4051 | | |
| BLE, Modbus TCP/IP | 4 Progr. I/O | 2X+PQ1+RTS | 391555 | M4M 2X Ethernet PQ1+RTS | 2CSG239155R4051 | | |
| BLE, Modbus RTU | 4 Progr. I/O | 2X+PQ2+RTS | 391159 | M4M 2X Modbus PQ2+RTS | 2CSG239115R4051 | | |
| BLE, Modbus TCP/IP | 4 Progr. I/O | 2X+PQ2+RTS | 391654 | M4M 2X Ethernet PQ2+RTS | 2CSG239165R4051 | | |

# Overall dimensions

## M4M 20 and M4M 30

**Overall dimensions**
All measurements in mm

**Dimensions**
A: 96 mm
B: 96 mm
C: 77,5 mm
D: 57 mm
E: 20,5 mm
F: 92 mm

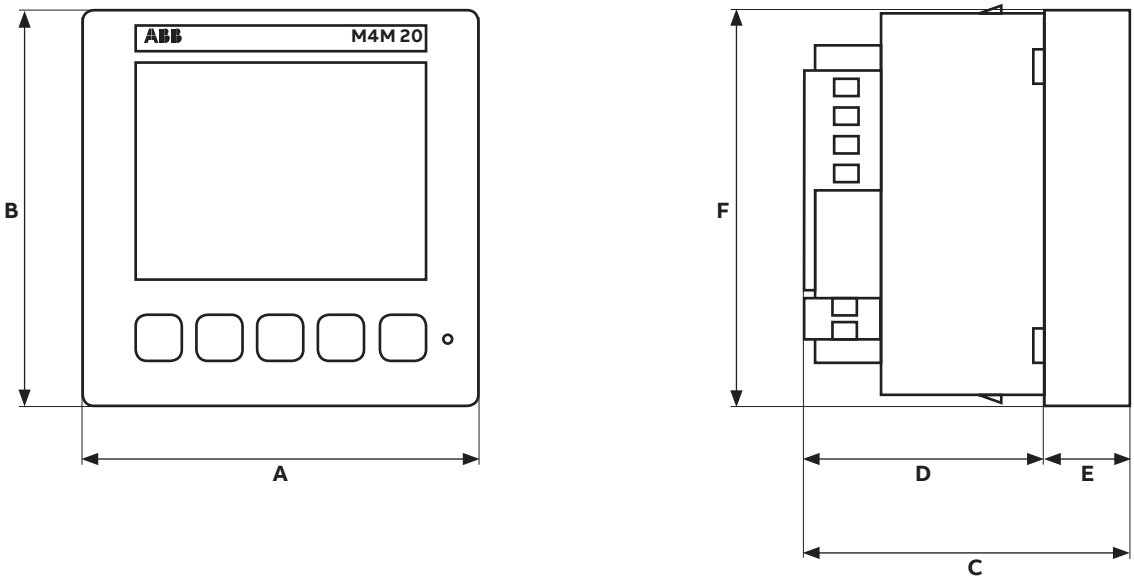


## M4M 2X

**Overall dimensions**
All measurements in mm

**Dimensions**
A: 96 mm
B: 96 mm
C: 77.5 mm
D: 53.5 mm
E: 22 mm
F: 92 mm

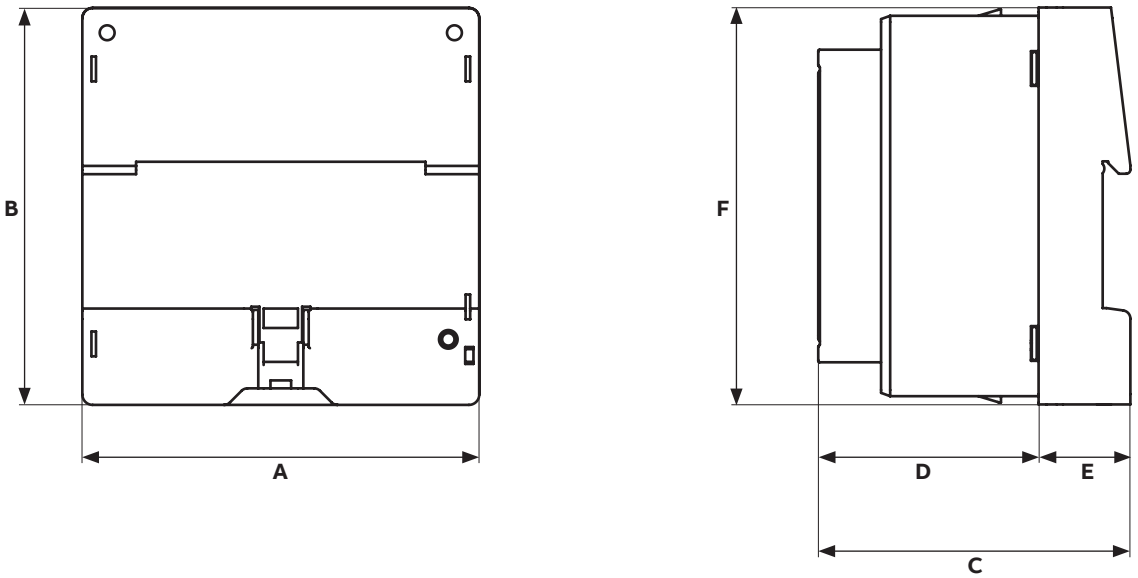

# Quick reference links
## Scan for more details

### M1 Single Fuction Meters


**Catalogue**


**User manual**

### M1M 10 Multi Fuction Meters


**Catalogue**


**User manual**

### M1M 12 Multi Fuction Meters


**Catalogue**


**User manual**

### M1M DS Dual Source Meters


**Catalogue**


**User manual**

### M1M 20B Power Meter


**Catalogue**


**User manual**

### M1M 30B Power Meter


**Catalogue**


**User manual**

### M1M 15 Power Meter


**Catalogue**


**Installation Manual**


**Communication Manual**


**User manual**

### M1M 20 Power Meter


**Catalogue**


**Installation Manual**


**Communication Manual**


**User manual**

### M1M 30 Power Meter


**Catalogue**


**Installation Manual**


**Communication Manual**


**User manual**

### M4M 20


**Catalogue**


**Installation Manual**
M4M 20 and M4M 20-M


**Installation Manual**
M4M 20 Rogowski


**Installation Manual**
M4M 2X


**Communication Manual**
Modbus communication manual (valid for M4M Modbus and M4M Ethernet)


**Communication Manual**
Profibus communication manual


**Communication Manual**
BACnet communication manual


**Communication Manual**
M4M Modbus map


**User Manual**

# Quick reference links
## Scan for more details

### M4M 30

**Catalogue**

**Installation Manual**
M4M 30 and M4M 30-M

**Installation Manual**
M4M 30 Rogowski

**Communication Manual**
Modbus communication manual (valid for M4M Modbus and M4M Ethernet)

**Communication Manual**
Profibus communication manual

**Communication Manual**
BACnet communication manual

**Communication Manual**
M4M Modbus map

**User Manual**

### EQ Meters

**Catalogue**

**Manual**
A41/A42/A43/ A44

**Manual**
A44 552-110/ A44 553-110

**Manual**
B21/B23/B24

**Manual**
C11/C13

**Manual**
Front mounting kit 37052

### Insite Pro

**Catalogue**

**Manual**
Installation Manual SCU100

**Manual**
Installation Manual DMs

**User Manual**

### CMS

**Catalogue**
CMS-700

**Catalogue**
CMS-660

**Manual**
CMS-700

**Manual**
CMS-660

**Manual**
CMS-600

**Manual**
CMS open-core sensors

**Manual**
CMS solid-core sensors



**ABB India Helpline**
Technical telephone support for
customers and channel partners.
Toll free: (BSNL) +91 1800 420 07 07

**new.abb.com/low-voltage**

© Copyright 2022 ABB. All rights reserved.
Specifications subject to change without notice.

ELSB/2022_02_04/ABBPMP_0001