H 312

Dimensions

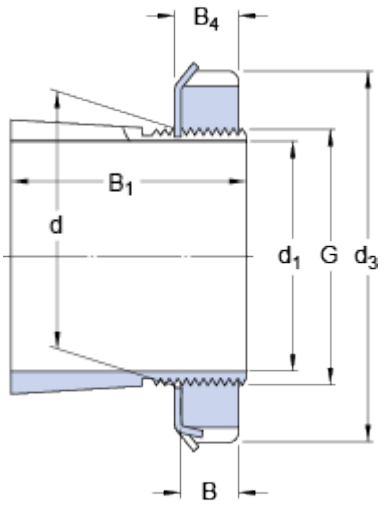

d_1	55	mm
d	60	mm
d_3	80	mm
B_1	47	mm
B	11	mm
B_4	13	mm
G	M 60x2	

Mass

Mass adapter sleeve assembly	0.36	kg

Appertaining products

Lock nut	KM 12
Locking device	MB 12

Appropriate products

Hydraulic nut	HMV 12 E