Photoelectric Sensors

BFB M18M-001-P-S4

Ordercode: BFB0009

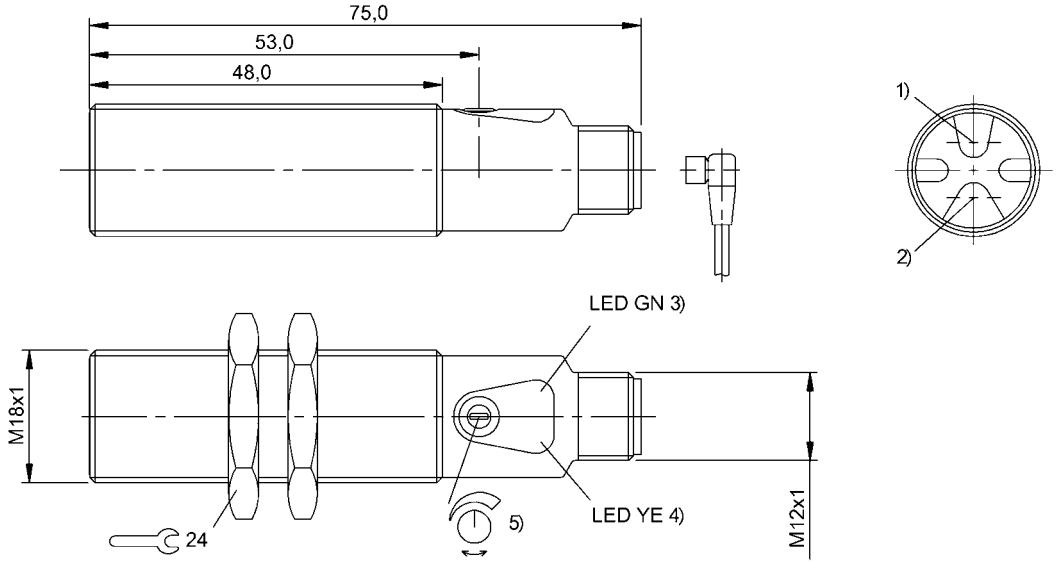

1) Optical axis receiver 2) Optical axis emitter 3) Operating voltage 4) Light reception/limit area 5) Sn

Display/Operation

Adjuster	Potentiometer 270°
Display	LED green: Power LED yellow: Light received
Setting	Sensitivity (Sn)

Electrical connection

Connection	Connector-plug, 4-pin
Contact, surface protection	Gold plated
Polarity reversal protected	yes
Protection against device mix-ups	yes
Short-circuit protection	yes

Electrical data

Load capacitance max. at Ue	2 µF
No-load current Io max. at Ue	30 mA
Operating voltage Ub	10…30 VDC
Rated insulation voltage Ui	75 V DC
Rated operating current Ie	100 mA
Rated operating voltage Ue DC	24.0 V
Ready delay tv max.	19 ms
Ripple max. (% of Ue)	15 %
Switching frequency	1000 Hz
Turn-off delay toff max.	0.5 ms
Turn-on delay ton max.	0.5 ms
Utilization category	DC -13
Voltage drop Ud max. at Ie	1.5 V

Environmental conditions

Ambient temperature	-5…55 °C
Ambient temperature max.	55 °C 65 °C for operating by small Ub
EN 60068-2-27, Shock	Half-sinus, 30 gn, 11 ms, 3x6 Half-sinus, 100 gn, 2ms, 3x8000
EN 60068-2-6, Vibration	55 Hz, amplitude 1 mm, 3x30 min 10…2000 Hz, amplitude 1 mm, 30 gn, 3x5 h
Protection degree	IP67

Functional safety

MTTF (40 °C)	82 a

General data

Approval/Conformity	CE
Basic standard	IEC 60947-5-2
Principle of operation	Photoelectric sensor
Style	Cylinder, straight optics

Material

Housing material	Brass
Surface protection	nickel plates

Mechanical data

Dimension	Ø 18 x 75 mm
Mounting	Nut M18x1
Tightening torque max.	15 Nm 30 Nm

Optical data

Ambient light max.	10000 Lux

BFB M18M-001-P-S4
Ordercode: BFB0009

LED group per IEC 62471	Exempt Group
Light type	Red light
Principle of optical operation	depends on fiber optics
Switching function, optical	Light/dark switching
Wave length	626 nm

Output/Interface

Switching output	2x PNP normally open/normally closed (NO/NC)

Range/Distance

Hysteresis H max. (% of Sr)	10 %
Range	depends on fiber optics

Remarks

The sensor is functional again after the overload has been eliminated.
For additional information, refer to user's guide.
Order accessories separately.

For more information about MTTF and B10d see MTTF / B10d Certificate

Indication of the MTTF- / B10d value does not represent a binding composition and/or life expectancy assurance; these are simply experiential values with no warranty implications. These declared values also do not extend the expiration period for defect claims or affect it in any way.

Connector view



Wiring Diagram

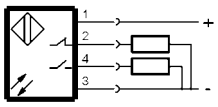

Diagram

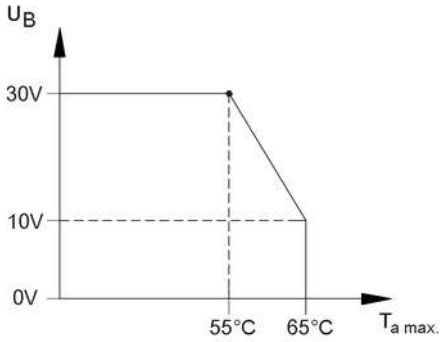

Symbols for Optoelectronic Sensors

