Brand of NTN corporation

Technical data

USPF207

Bearing units



Sheet metal housing, radial insert ball bearing with socket set screws, single lip seal

KIT CONTENT

US207G2, PF207

VISUAL (S)

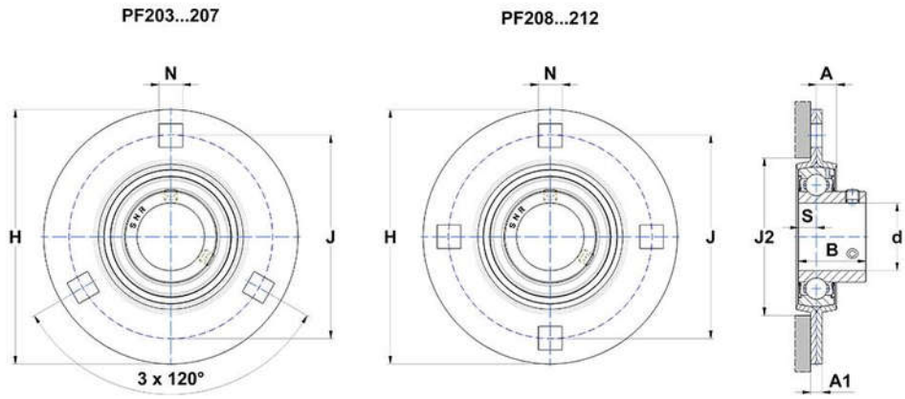

PRODUCT DEFINITION

Brand	SNR
A - Housing height	10,8 mm
A1 - Housing foot height / flange height	5 mm
A2 - Total height from mounting surface	26 mm
B - Width of Inner Ring	32 mm
d - Shaft diameter	35 mm

PRODUCT DEFINITION	
e - Distance mounting surface to bearing center	2,5 mm
H - Housing length, width or diameter	126,5 mm
J - Mounting holes distance	100 mm
N - Mounting hole dimension	11 mm
S - Distance front side/bearing centre	8,5 mm

PRODUCT PERFORMANCE	
C - Dynamic load rating	25700000 mN
C0 - Static load rating	15200000 mN
Operating temperature min.	253,15 °K
Operating temperature max.	373,15 °K

OTHER FEATURES	
Mass	0,81 kg
Recommended tightening torque for set screw	5.5 N-m