Product data sheet
Characteristics

XS4P08PA340D
inductive sensor XS4 M8 - L45mm - PPS - Sn2.5mm - 12..24VDC - M12

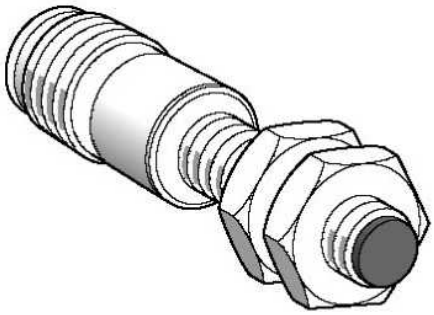

Main

Range of product	OsiSense XS
Series name	General purpose
Sensor type	Inductive proximity sensor
Product specific application	-
Sensor name	XS4
Sensor design	Cylindrical M8
Size	45 mm
Body type	Fixed
Detector flush mounting acceptance	Non flush mountable
Material	Plastic
Type of output signal	Discrete
Wiring technique	3-wire
[Sn] nominal sensing distance	2.5 mm
Discrete output function	1 NO
Output circuit type	DC
Discrete output type	PNP
Electrical connection	M12 male connector, 4 pins
[Us] rated supply voltage	12...24 V DC with reverse polarity protection
Switching capacity in mA	<= 200 mA DC with overload and short-circuit protection
IP degree of protection	IP67 conforming to IEC 60529

Complementary

ISO thread	M8 x 1
Detection face	Frontal
Front material	PPS
Enclosure material	PPS
Operating zone	0...2 mm
Differential travel	1...15% of Sr
Status LED	1 LED (yellow) for output state
Supply voltage limits	10...36 V DC
Switching frequency	<= 5000 Hz
Voltage drop	<= 2 V (closed
Current consumption	<= 10 mA (no-load)
Delay first up	<= 10 ms
Delay response	<= 0.1 ms
Delay recovery	<= 0.1 ms
Marking	CE
Threaded length	26 mm
Length	42 mm
CAD overall height	18 mm
CAD overall depth	45 mm
Product weight	0.015 kg

The information provided in this documentation contains general descriptions and/or technical characteristics of the performance of the products contained herein.
This documentation is not intended as a substitute for and is not to be used for determining suitability or reliability of these products for specific user applications.
It is the duty of any such user or integrator to perform the appropriate and complete risk analysis, evaluation and testing of the products with respect to the relevant specific application or use thereof.
Neither Schneider Electric Industries SAS nor any of its affiliates or subsidiaries shall be responsible or liable for misuse of the information contained herein.

Environment

Product certifications	CSA UL
Ambient air temperature for operation	-25...70 °C
Ambient air temperature for storage	-40...85 °C
Vibration resistance	25 gn, amplitude: +/- 2 mm (f = 10...55 Hz) conforming to IEC 60068-2-6
Shock resistance	50 gn (duration = 11 ms) conforming to IEC 60068-2-27

Offer Sustainability

Sustainable offer status	Green Premium product
RoHS	Compliant - since 1010 - Schneider Electric declaration of conformity
REACh	Reference not containing SVHC above the threshold
Product environmental profile	Available Download Product Environmental
Product end of life instructions	Available Download End Of Life Manual

Contractual warranty

Period	18 months