Starrett®

Precision, **Quality**, Innovation

PTA AND HAND TOOLS

Hole Saws

Hand **Hacksaw Blades**

Jigsaw **Blades**

Reciprocating Saw Blades

Measuring Tapes

Utility **Knives**

Spirit Levels

Chalk Lines

Protractors

Shop **Tools**



Catalogue 71E

PRECISION, QUALITY, INNOVATION

For more than 130 years, manufacturers, builders and craftsmen worldwide have depended upon precision tools and saws from The L.S. Starrett Company to ensure the consistent quality of their work.

They know that the Starrett name on a saw blade, hand tool or measuring tool ensures exceptional quality, innovative products and expert technical assistance.

With strict quality control, state-of-the-art equipment and an ongoing commitment to producing superior tools, the thousands of products in today's Starrett line continue to be the most accurate, robust and durable tools available. This catalogue features those tools most widely used on a jobsite or in a workshop environment.



HOLE SAWS

Our new line includes the Fast Cut and Deep Cut bi metal saws, and application-specific hole saws engineered specifically for certain materials, power tools and jobs. A full line of accessories, including Quick-Hitch™ arbors, pilot drills and protective cowls, enables you to optimise each job with safe, cost efficient solutions.

05



HACKSAWS

Safe-Flex®, Redstripe and Grey-Flex® blades and frames, bi metal and Redstripe® power hack blades, compass and PVC saws to assist you with all of your sawing needs.

27



JIG SAWS

Our Unified Shank® jig saws are developed for wood, metal and multi-purpose cutting. The Starrett bi-metal unique® saw technology provides our blades with 170% greater resistance to breakage than standard bi metal blades, Starrett blades will also cut faster and last longer than other saws. Our Dual Cut® blades are an exclusive saw design to provide burr-free cutting on both sides of the material.

35



RECIPROCATING SAWS

General purpose reciprocating blades provide a comprehensive set of sawing solutions to professional trades people and do-it-yourselfers. Our offering includes pneumatic blades for pallet dismantling, King Cut® rescue and demolition and general purpose blades.

39



MEASURING TAPES

Our measuring tapes and Measure Stix™ are offered in a wide range of styles and sizes. Graduations are available in Metric and Imperial to meet virtually every requirement for accurate tape measurement. Introducing the new series of Starrett, Starrett Exact® and Starrett Exact® Plus.

43



PTA AND HAND TOOLS



51

UTILITY KNIVES

A whole new line of utility knives to suit the cutting needs of mechanics, carpenters, maintenance workers and do-it-yourselfers. We have the utility knife for your need.

55

LEVELS

A variety of levels are offered in various lengths and styles. Whether you are looking for aluminium or plastic, they are all accurate and excellent quality. Also introducing the new Starrett, Starrett Exact® and Starrett Exact® Plus.

63

CHALK

Our chalk lines are produced with high impact-resistant cases. The chalk line is secured with a stainless steel hook. Meet the new series.

67

RULES AND SQUARES

Our rules and squares are made from fine quality materials and produced to the highest precision standards, making them the most accurate and readable rules on the market. Offered in a practical variety of styles to suit the needs of the individual, whether it be a toolmaker, mechanic, carpenter, or a do-it-yourself homeowner.

75

PROTRACTORS

The ProSite® Protractor takes error-prone calculations out of the process of mitre cuts. The tool is ideal for carpenters, plumbers and all building trades that require the measuring and transferring of angles.



HOLE SAWS

		BI METAL HOLE SAWS			TUNGSTEN CARBIDE TIPPED HOLE SAWS			DIAMOND GRIT/TIPPED HOLE SAWS	
Material Thickness and Application		Fast Cut	Deep Cut	Cordless Smooth Cutting Hole Saw	Fast Cut Multi Purpose Hole Saw	Stainless Steel Hole Saw	Carbide Tipped Hole Saw	Ceramic and Abrasive Material Tile Drill and Hole Saw	Brick and Masonry Dri Core Drill
Hole Saw Depth		41mm 1.5/8"	51mm 2"	13mm 1/2"	54mm 2.1/8"	13mm 1/2"	41mm 1.5/8"	Diameter dependent	Diameter dependent
Recommended Cutting Depths	<3mm	✓		✓	✓	✓	✓	✓	
	3-13mm		✓		✓		✓	✓	
	>13mm		✓		✓		✓	✓	✓
• Metal • Inox (Stainless) • Non Ferrous Materials		★★	★★	★★		★★			
		★★	★★	★★		★★			
Cast iron		★	★				★★		
Wood		★	★	★	★★		★		
Nail Embedded Wood							★★		
Veneer	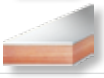	★	★	★	★★		★★		
MDF					★★				
Plastic		★	★	★	★★		★		
Acrylic		★	★	★	★★		★		
Ceramic					★		★	★★	
Porcelain / Glass / Stone								★★	
Fibreglass		★	★		★		★★	★★	
Formica		★	★	★	★★		★★		
Plaster		★	★	★	★★		★★		
Suspended Floors		★	★				★★		
Brick and Masonry							★	★★	★★

Cutting Performance			
Excellent	★★	Satisfactory	★

For hole saw cutting speed recommendations please see Appendix One on page 78.

BI METAL

NEW!



FAST CUT BI METAL HOLE SAWS

The Fast Cut saw combines a new tooth material, with enhanced heat and wear resistance, and a new tooth design, providing a smoother, faster cut on a wide range of materials, when compared against the previous Constant Pitch saw.

Specifically suited to cutting stainless and mild steel sheet, the Fast Cut will also cut through tubes with a wall thickness of up to 3mm (1/8").

Hole Saw Depth		41mm 1.5/8"
Rec. Cutting Depth	<3mm	✓
• Metal • Inox (Stainless)		★★
• Non Ferrous Materials		★★
Cast iron		★
Wood		★
Veneer		★
Plastic		★
Acrylic		★
Fibreglass		★
Formica		★
Plaster		★
Suspended Floors		★
Cutting Performance		
Excellent		★★
Satisfactory		★

FEATURES

- New tooth material for enhanced heat and wear resistance and greater product life.
- Ideal for stainless and mild steel sheet and tubes with wall thickness of up to 3mm (1/8").
- New 5.5 TPI / 25mm tooth form provides a smoother, faster cut in all materials.
- Hole saw depth of 41mm (1.5/8").

	Diameter	
Cat. No.	Inch	mm
FCH0096	9/16"	14mm
FCH0058	5/8"	16mm
FCH1016	11/16"	17mm
FCH0034	3/4"	19mm
FCH2532	25/32"	20mm
FCH1036	13/16"	21mm
FCH0078	7/8"	22mm
FCH1056	15/16"	24mm
FCH0100	1"	25mm
FCH0116	1.1/16"	27mm
FCH0118	1.1/8"	29mm
FCH0136	1.3/16"	30mm
FCH0114	1.1/4"	32mm
FCH0156	1.5/16"	33mm
FCH0138	1.3/8"	35mm
FCH0176	1.7/16"	37mm
FCH0112	1.1/2"	38mm
FCH0196	1.9/16"	40mm

	Diameter	
Cat. No.	Inch	mm
FCH0158	1.5/8"	41mm
FCH1116	1.11/16"	43mm
FCH0134	1.3/4"	44mm
FCH1136	1.13/16"	46mm
FCH0178	1.7/8"	48mm
FCH0200	2"	51mm
FCH0216	2.1/16"	52mm
FCH0218	2.1/8"	54mm
FCH056M	2.3/16	56mm
FCH0214	2.1/4"	57mm
FCH0256	2.5/16"	59mm
FCH0238	2.3/8"	60mm
FCH0212	2.1/2"	64mm
FCH0296	2.9/16"	65mm
FCH0258	2.5.8"	67mm
FCH068M	2.11/16"	68mm
FCH0234	2.3/4"	70mm
FCH0278	2.7/8"	73mm

	Diameter	
Cat. No.	Inch	mm
FCH0300	3"	76mm
FCH0318	3.1/8"	79mm
FCH0314	3.1/4"	83mm
FCH0338	3.3/8"	86mm
FCH0312	3.1/2"	89mm
FCH0358	3.5/8"	92mm
FCH0334	3.3/4"	95mm
FCH0378	3.7/8"	98mm
FCH0400	4"	102mm
FCH0418	4.1/8"	105mm
FCH0414	4.1/4"	108mm
FCH0438	4.3/8"	111mm
FCH0412	4.1/2"	114mm
FCH0434	4.3/4"	121mm
FCH0500	5"	127mm
FCH0514	5.1/4"	133mm
FCH0512	5.1/2"	140mm
FCH0600	6"	152mm





BI METAL

NEW!

DEEP CUT BI METAL HOLE SAWS



The Deep Cut saw combines the tried and tested tooth form from the previous Dual Pitch product, with a new tooth material for enhanced heat and wear resistance.

Starrett® DEEP CUT

The Deep Cut saw also features an increased hole saw depth of 51mm (2"), and is ideal for cutting metal of more than 3mm thickness, tubes with a wall thickness of greater than 3mm and wood up to 51mm (2") thick.

FEATURES

- Aggressive material penetration and kerf clearance.
- Ideal for solid materials or tubes of a wall thickness greater than 3mm.
- 51mm hole saw depth improves cutting performance on tubes, particularly where there is a need to cut through both sides of the tube.
- New tooth material for enhanced heat and wear resistance and greater product life.
- Hole saw depth of 51mm (2").

Hole Saw Depth		51mm 2"
Rec. Cutting Depth	3-13mm	✓
	>13mm	✓
• Metal • Inox (Stainless)		★★
• Non Ferrous Materials		★★
Cast iron		★
Wood		★
Veneer		★
Plastic		★
Acrylic		★
Fibreglass		★
Formica		★
Plaster		★
Suspended Floors		★
Cutting Performance		
Excellent		★★
Satisfactory		★

	Diameter	
Cat. No.	Inch	mm
DCH0034	3/4"	19mm
DCH2532	25/32"	20mm
DCH1036	13/16"	21mm
DCH0078	7/8"	22mm
DCH1056	15/16"	24mm
DCH0100	1"	25mm
DCH0116	1.1/16"	27mm
DCH0118	1.1/8"	29mm
DCH0136	1.3/16"	30mm
DCH0114	1.1/4"	32mm
DCH0156	1.5/16"	33mm
DCH0138	1.3/8"	35mm
DCH0176	1.7/16"	37mm
DCH0112	1.1/2"	38mm
DCH0196	1.9/16"	40mm
DCH0158	1.5/8"	41mm
DCH1116	1.11/16"	43mm
DCH0134	1.3/4"	44mm
DCH1136	1.13/16"	46mm

	Diameter	
Cat. No.	Inch	mm
DCH0178	1.7/8"	48mm
DCH0200	2"	51mm
DCH0216	2.1/16"	52mm
DCH0218	2.1/8"	54mm
DCH056M	2.3/16"	56mm
DCH0214	2.1/4"	57mm
DCH0256	2.5/16"	59mm
DCH0238	2.3/8"	60mm
DCH0212	2.1/2"	64mm
DCH0296	2.9/16"	65mm
DCH0258	2.5/8"	67mm
DCH068M	2.11/16"	68mm
DCH0234	2.3/4"	70mm
DCH0278	2.7/8"	73mm
DCH0300	3"	76mm
DCH0318	3.1/8"	79mm
DCH0314	3.1/4"	83mm
DCH0338	3.3/8"	86mm

	Diameter	
Cat. No.	Inch	mm
DCH0312	3.1/2"	89mm
DCH0358	3.5/8"	92mm
DCH0334	3.3/4"	95mm
DCH0378	3.7/8"	98mm
DCH0400	4"	102mm
DCH0418	4.1/8"	105mm
DCH0414	4.1/4"	108mm
DCH0438	4.3/8"	111mm
DCH0412	4.1/2"	114mm
DCH0434	4.3/4"	121mm
DCH0500	5"	127mm
DCH0514	5.1/4"	133mm
DCH0512	5.1/2"	140mm
DCH0600	6"	152mm
DCH160M	6.5/16"	160mm
DCH168M	6.5/8"	168mm
DCH177M	6.31/32"	177mm
DCH210M	8.9/32"	210mm

BI METAL CORDLESS SMOOTHCUT

HOLE SAWS FOR BATTERY OPERATED POWER TOOLS

Complete hole saw assembly including arbor, pilot drill and ejector spring, specifically for cordless power tools. Heat resistant high speed steel edge, with alloy backing and constant pitch of 8 TPI for stainless and mild sheet steel, plasterboard, wood and thin non-metallics.



FEATURES

- Ideal for cutting stainless, tool and mild steel sheeting plus plasterboard, wood and thin plastics.
- Safety stop at the base of the hole saw prevents saw travel beyond the hole saw depth - 13mm (1/2").
- Complete assembly - arbor, pilot drill and ejector spring included.
- Constant pitch teeth provide exceptionally smooth cuts. Pitch 8 teeth per 25mm / inch.
- Recommended cutting depth 2mm.

Hole Saw Depth		13mm 1/2"
Rec. Cutting Depth	<3mm	✓
• Metal • Inox (Stainless)		★★
• Non Ferrous Materials		★★
Cast iron		★
Wood		★
Veneer		★
Plastic		★
Acrylic		★
Formica		★
Plaster		★
Cutting Performance		
Excellent		★★
Satisfactory		★

	Diameter	
Cat. No.	mm	Inch
CSC16	16mm	5/8"
CSC19	19mm	3/4"
CSC20	20mm	25/32"
CSC22	22mm	7/8"
CSC25	25mm	1"
CSC27	27mm	1.1/16"
CSC29	29mm	1.1/8"

	Diameter	
Cat. No.	mm	Inch
CSC30	30mm	1.3/16"
CSC32	32mm	1.1/4"
CSC35	35mm	1.3/8"
CSC38	38mm	1.1/2"
CSC40	40mm	1.9/16"
CSC51	51mm	2"



CARBIDE TIPPED

HIGH PERFORMANCE TRIPLE CHIP TUNGSTEN CARBIDE

CT Hole Saws offer a cost effective solution for cutting nail embedded wood, or virtually any wood and metal combination, reinforced concrete and fibreglass. This saw is particularly suitable where there is a requirement for a high quality surface finish on the entry and exit hole and it also provides a smooth cut when cutting traditional lathe and plaster.



FEATURES

- A cost effective solution for cutting nail embedded wood, any wood and metal combination, reinforced concrete and fibreglass.
- Leaves high quality surface finish on entry and exit and provides a smooth cut.
- Tungsten carbide tipped teeth for outstanding cutting performance and product durability.
- Suitable for use in electric and battery operated tools.
- Hole saw depth of 41mm (1-5/8").

Hole Saw Depth		41mm 1.5/8"
Rec. Cutting Depth	<3mm	✓
	3-13mm	✓
	>13mm	✓
Cast iron		★★
Wood		★
Nail Embedded Wood		★★
Veneer		★★
Plastic		★
Acrylic		★
Ceramic		★
Fibreglass		★★
Formica		★★
Plaster		★★
Suspended Floors		★★
Brick and Masonry		★

Cutting Performance	
Excellent	★★
Satisfactory	★

	Diameter	
Cat. No.	mm	Inch
CT034	19mm	3/4"
CT078	22mm	7/8"
CT100	25mm	1"
CT118	29mm	1.1/8"
CT114	32mm	1.1/4"
CT138	35mm	1.3/8"
CT112	38mm	1.1/2"
CT196	40mm	1.9/16"
CT158	41mm	1.5/8"

	Diameter	
Cat. No.	mm	Inch
CT134	44mm	1.3/4"
CT178	48mm	1.7/8"
CT200	51mm	2"
CT218	54mm	2.1/8"
CT214	57mm	2.1/4"
CT238	60mm	2.3/8"
CT212	64mm	2.1/2"
CT258	67mm	2.5/8"
CT234	70mm	2.3/4"

	Diameter	
Cat. No.	mm	Inch
CT300	76mm	3"
CT318	79mm	3.1/8"
CT314	83mm	3.1/4"
CT338	86mm	3.3/8"
CT312	89mm	3.1/2"
CT358	92mm	3.5/8"
CT334	95mm	3.3/4"
CT378	98mm	3.7/8"
CT400	102mm	4"

	Diameter	
Cat. No.	mm	Inch
CT418	105mm	4.1/8"
CT414	108mm	4.1/4"
CT438	111mm	4.3/8"
CT412	114mm	4.1/2"
CT434	121mm	4.3/4"
CT500	127mm	5"
CT512	140mm	5.1/2"
CT600	152mm	6"



CARBIDE TIPPED

TUNGSTEN CARBIDE TIPPED MULTI PURPOSE

MPH Hole Saws will power through wood, MDF, plastics, plasterboard and ceramic wall tiles. Cutting speeds will be up to five times faster than a bi metal hole saw cutting the same material. For installers, our range of kits provide the perfect solution to all your cutting needs.



FEATURES

- Rapid, heat free stock removal of wood, MDF, plastics, plasterboard, and ceramic tiles.
- Carbide tipped teeth for outstanding cutting performance and product durability.
- Smooth cutting with minimal heat build up.
- Suitable for use in electric and battery powered tools.
- Hole saw depth of 54mm (2.1/8").
- Special arbors featuring extended length pilot drills are available, alternatively fit the longer A014CE pilot drill to our standard Starrett arbors.





	Diameter	
Cat. No.	mm	Inch
MPH0034	19mm	3/4"
MPH2532	20mm	25/32"
MPH0078	22mm	7/8"
MPH0100	25mm	1"
MPH0116	27mm	1.1/16"
MPH0118	29mm	1.1/8"
MPH0136	30mm	1.3/16"
MPH0114	32mm	1.1/4"
MPH0138	35mm	1.3/8"
MPH0112	38mm	1.1/2"
MPH0196	40mm	1.9/16"
MPH0158	41mm	1.5/8"
MPH0134	44mm	1.3/4"
MPH0178	48mm	1.7/8"
MPH0200	51mm	2"

	Diameter	
Cat. No.	mm	Inch
MPH0218	54mm	2.1/8"
MPH0214	57mm	2.1/4"
MPH0238	60mm	2.3/8"
MPH0212	64mm	2.1/2"
MPH0296	65mm	2.9/16"
MPH0258	67mm	2.5/8"
MPH0234	70mm	2.3/4"
MPH0278	73mm	2.7/8"
MPH0300	76mm	3"
MPH0318	79mm	3.1/8"
MPH0314	83mm	3.1/4"
MPH0338	86mm	3.3/8"
MPH0312	89mm	3.1/2"
MPH0358	92mm	3.5/8"

	Diameter	
Cat. No.	mm	Inch
MPH0334	95mm	3.3/4"
MPH0378	98mm	3.7/8"
MPH0400	102mm	4"
MPH0418	105mm	4.1/8"
MPH0414	108mm	4.1/4"
MPH0456	109mm	4.5/16"
MPH0438	111mm	4.3/8"
MPH0412	114mm	4.1/2"
MPH0458	118mm	4.5/8"
MPH0434	121mm	4.3/4"
MPH0500	127mm	5"
MPH0512	140mm	5.1/2"
MPH0600	152mm	6"
MPH0614	159mm	6.1/4"

Cutting Depth		54mm 2.1/8"
Rec. Cutting Depth	<3mm	✓
	3-13mm	✓
	>13mm	✓
Wood		★★
Veneer		★★
MDF		★★
Plastic		★★
Acrylic		★★
Ceramic		★
Fibreglass		★
Formica		★★
Plaster		★★

Cutting Performance	
Excellent	★★
Satisfactory	★



CARBIDE TIPPED

TUNGSTEN CARBIDE TIPPED STAINLESS STEEL SHEET METAL

Ideal for cutting stainless and high alloy steels, non ferrous light metals and reinforced fabrics, at a much faster speed than is possible with a bi metal hole saw.

The tough tungsten carbide tipped teeth have a positive cutting angle which provides fast and efficient removal of chips and swarf, recommended cutting depth is 2mm (1/8").

Hole Saw Depth		13mm 1/2"
Rec. Cutting Depth	<3mm	✓
• Metal • Inox (Stainless)		★★
• Non Ferrous Materials		★★

Cutting Performance	
Excellent	★★
Satisfactory	★



FEATURES

- Ideal for production cutting, and particularly suitable for use in drills with limited speed control.
- Tungsten carbide tipped teeth provide superb product life and cutting performance.
- Replacement pilot drills are available.
- Complete assembly - there is no requirement to purchase a separate arbor and pilot drill.
- Safety stop at the base of the hole saw prevents saw travel beyond the hole saw depth - 13mm (1/2").
- Recommended cutting depth 2mm (1/8").

	Diameter	
Cat. No.	mm	Inch
SM15	15mm	19/32"
SM16	16mm	5/8"
SM17	17mm	11/16"
SM18	18mm	23/32"
SM19	19mm	3/4"
SM20	20mm	25/32
SM21	21mm	13/16"
SM22	22mm	7/8"
SM23	23mm	29/32"
SM24	24mm	15/16"

	Diameter	
Cat. No.	mm	Inch
SM25	25mm	1"
SM26	26mm	1.1/32"
SM27	27mm	1.1/16"
SM28	28mm	1.3/32"
SM29	29mm	1.1/8"
SM30	30mm	1.3/16"
SM31	31mm	1.7/32"
SM32	32mm	1.1/4"
SM33	33mm	1.5/16"
SM34	34mm	1.11/32"

	Diameter	
Cat. No.	mm	Inch
SM35	35mm	1.3/8"
SM36	36mm	1.13/32"
SM37	37mm	1.7/16"
SM38	38mm	1.1/2"
SM39	39mm	1.17/32"
SM40	40mm	1.9/16"
SM45	45mm	1.25/32"
SM50	50mm	1.31/32"
SM51	51mm	2
SM55	55mm	2.5/32"

	Diameter	
Cat. No.	mm	Inch
SM60	60mm	2.3/8"
SM65	65mm	2.9/16"
SM70	70mm	2.3/4"
SM75	75mm	2.15/16"
SM80	80mm	3.5/32"
SM85	85mm	3.11/32"
SM90	90mm	3.17/32"
SM95	95mm	3.3/4"
SM100	100mm	3.15/16"



DIAMOND

DIAMOND TILE DRILLS



High performance hole saws for drilling small diameter holes in many non-metallics. These diamond edge hole saws are produced with a uniform coating of synthetic diamond grit bonded to a durable steel platform. Diamond edge saws produce clean, accurate cuts on brick, glass, ceramic tiles and stone.

	Size	
Cat. No.	mm	Inch
D0005	5mm	3/16"
D0006	6mm	15/64"
D0065	6.5mm	1/4"

	Size	
Cat. No.	mm	Inch
D0008	8mm	5/16"
D0010	10mm	3/8"
D0012	12mm	1/2"

FEATURES

- Able to cut rapidly through porcelain, glass, ceramics, brick and stone.
- Perfect for kitchen and bathroom installations.
- Smooth surface finish.
- Drive arbor and drill not required.
- Maximum cutting depth of 20mm (25/32").

Hole Saw Depth		20mm 25/32"
Rec. Cutting Depth	<3mm	✓
	3-13mm	✓
	>13mm	✓
Ceramic		★★
Porcelain / Glass / Stone		★★
Fibreglass		★★
Brick and Masonry		★★
Cutting Performance		
Excellent		★★
Satisfactory		★

TILE DRILL WATER BOTTLE

Plastic water dispensing bottle to apply coolant to drill bit. **Diamond tile drills and hole saws must always be cooled with water!**

Cat. No.
WCD01



DIAMOND TILE DRILL GUIDE

Used in place of a pilot bit to eliminate hole saw 'walking' and prevent damage to work surfaces. The guide is manufactured with rubber feet, allowing user to secure it in place without scratching work surface.

Cat. No.
DTDG01





DIAMOND

DIAMOND GRIT

High performance saws for non-metallics. Synthetic diamond grit bonded over a durable steel platform. Capable of cutting through porcelain, glass, ceramics, brick and stone, these hole saws are the ideal solution in the toughest of cutting situations.



Hole Saw Depth		41mm 1.5/8"
Rec. Cutting Depth	<3mm	✓
	3-13mm	✓
	>13mm	✓
Ceramic		★★
Porcelain / Glass / Stone		★★
Fibreglass		★★
Brick and Masonry		★★
Cutting Performance		
Excellent		★★
Satisfactory		★

Diamond tile drills and hole saws must always be cooled with water!



FEATURES

- Small diameter hole saws are perfect for kitchen and bathroom installations.
- Smooth surface finish, ideal when cutting glass and porcelain.
- Drive arbors with carbide tipped pilot drills available.
- Hole saw depth of 41mm (1.5/8").

	Diameter	
Cat. No.	mm	Inch
D0096	14mm	9/16"
D0058	16mm	5/8"
D1016	17mm	11/16"
D0034	19mm	3/4"
D2532	20mm	25/32"
D1036	21mm	13/16"
D0078	22mm	7/8"
D1056	24mm	15/16"
D0100	25mm	1"
D0116	27mm	1.1/16"
D0118	29mm	1.1/8"
D0136	30mm	1.3/16"
D0114	32mm	1.1/4"
D0156	33mm	1.5/16"

	Diameter	
Cat. No.	mm	Inch
D0138	35mm	1.3/8"
D0176	37mm	1.7/16"
D0112	38mm	1.1/2"
D0196	40mm	1.9/16"
D0158	41mm	1.5/8"
D1116	43mm	1.11/16"
D0134	44mm	1.3/4"
D1136	46mm	1.13/16"
D0178	48mm	1.7/8"
D0200	51mm	2"
D0216	52mm	2.1/16"
D0218	54mm	2.1/8"
D56MM	56mm	2.3/16"
D0214	57mm	2.1/4"

	Diameter	
Cat. No.	mm	Inch
D0256	59mm	2.5/16"
D0238	60mm	2.3/8"
D0212	64mm	2.1/2"
D0296	65mm	2.9/16"
D0258	67mm	2.5/8"
D68MM	68mm	2.11/16"
D0234	70mm	2.3/4"
D0278	73mm	2.7/8"
D0300	76mm	3"
D0318	79mm	3.1/8"
D0314	83mm	3.1/4"
D0338	86mm	3.3/8"
D0312	89mm	3.1/2"
D0358	92mm	3.5/8"

	Diameter	
Cat. No.	mm	Inch
D0334	95mm	3.3/4"
D0378	98mm	3.7/8"
D0400	102mm	4"
D0418	105mm	4.1/8"
D0414	108mm	4.1/4"
D0438	111mm	4.3/8"
D0412	114mm	4.1/2"
D0434	121mm	4.3/4"
D0500	127mm	5"
D0512	140mm	5.1/2"
D0600	152mm	6"

DIAMOND

DIAMOND CORE DRILLS

Designed for intensive dry cutting on brickwork and blockwork, and particularly suitable for plumbers, electricians and other installation engineers, our dri core drills will be invaluable in the construction of flues, air vents and plumbing or electrical channels.

Hole Saw Depth	Diameter dependent
Rec. Cutting Depth >13mm	✓
Brick and Masonry	★★
Cutting Performance	
Excellent	★★
Satisfactory	★







FEATURES

- Faster rate of cut than TCT alternatives with less pressure required.
- 300mm saw length on 22 and 28mm diameter saws. 150mm saw length on all other diameters.
- Note: not for use on reinforced concrete.

	Size	
Cat. No.	mm	Inch
BMC22	22mm	7/8
BMC28	28mm	1.3/32
BMC38	38mm	1.1/2
BMC42	42mm	1.21/32
BMC48	48mm	1.7/8
BMC52	52mm	2.1/16
BMC65	65mm	2.9/16
BMC78	78mm	3.1/16
BMC102	102mm	4
BMC107	107mm	4.7/32
BMC117	117mm	4.19/32
BMC127	127mm	5
BMC152	152mm	6

Description	Cat. No.
SDS Adapter	BMA2
Hex Adapter	BMA1
240mm SDS Adapter	BMA2240
240mm Hex Adapter	BMA1240
Pilot Drill - 13 x 200mm	BMA3200
Pilot Drill - 13 x 350mm	BMA3350
150 mm Extension	BMA4150
250mm Extension	BMA4250
Drift Key	BMA5



HOLE SAW KITS

Starrett offer a comprehensive range of kits to support our hole saw range. Suitable for tradesmen, installation engineers, industry generally and the d-i-y enthusiast, our kits feature a range of saws with sizes selected specifically to suit the relevant application. Packed in sturdy carrying cases, the kits will be an invaluable addition to any toolbox.



FAST CUT BI METAL HOLE SAW KITS

Description	Cat No	Hole Saw Sizes	Arbors and Accessories
General Purpose Kit	KFC06023	22mm, 29mm, 35mm, 44mm, 51mm & 64mm	A1 & A10 Arbors
Electricians Kit	KFC06022	16mm, 20mm, 25mm, 29mm, 44mm & 51mm	A1 & A10 Arbors
Electricians Kit 1	KFC06021	16mm, 20mm, 25mm, 32mm, 40mm & 51mm	A1 & A10 Arbors
Ulti Mate Electricians Kit	KFC06071	16mm, 20mm, 25mm, 32mm, 40mm & 51mm	A3 Ulti Mate Arbor 6 Ulti Mate Arbor Adapters
Deluxe Electricians Kit	KFC11021	16mm, 20mm, 22mm, 25mm, 29mm, 35mm, 44mm, 51mm, 64mm, 68mm & 76mm	A1 & A2 Arbors
Plumbers Kit	KFC07021	19mm, 22mm, 29mm, 38mm, 44mm, 51mm & 57mm	A1 & A10 Arbors
Deluxe Plumbers Kit	KFC11022	16mm, 19mm, 22mm, 29mm, 35mm, 38mm, 44mm, 51mm, 57mm, 65mm & 68mm	A1 & A2 Arbors
Plumbers and Electricians Kit	KFC12021	16mm, 20mm, 22mm, 29mm, 35mm, 38mm, 40mm, 44mm, 51mm, 57mm, 65mm & 68mm	A1 & A2 Arbors
Universal Kit	KFC14021	16mm, 20mm, 22mm, 25mm, 29mm, 32mm, 35mm, 38mm, 44mm, 51mm, 57mm, 64mm, 68mm & 76mm	A1 & A2 Arbors
Universal Kit 2	KFC11031	19mm, 22mm, 25mm, 32mm, 35mm, 38mm, 44mm, 51mm, 57mm, 64mm & 76mm	A1 & A2 Arbors A5 Extension

DEEP CUT BI METAL HOLE SAW KITS

Description	Cat No	Hole Saw Sizes	Arbors and Accessories
General Purpose Kit	KDC06021	22mm, 29mm, 35mm, 44mm, 51mm & 64mm	A1 & A10 Arbors
Electricians Kit	KDC05021	20mm, 25mm, 29mm, 44mm & 51mm	A1 & A10 Arbors
Deluxe Electricians Kit	KDC10021	20mm, 22mm, 25mm, 29mm, 35mm, 44mm, 51mm, 64mm, 68mm & 76mm	A1 & A2 Arbors
Plumbers Kit	KDC07021	19mm, 22mm, 29mm, 38mm, 44mm, 51mm & 57mm	A1 & A10 Arbors
Deluxe Plumbers Kit	KDC10022	19mm, 22mm, 29mm, 35mm, 38mm, 44mm, 51mm, 57mm, 65mm & 68mm	A1 & A2 Arbors
Universal Kit	KDC13021	20mm, 22mm, 25mm, 29mm, 32mm, 35mm, 38mm, 44mm, 51mm, 57mm, 64mm, 68mm & 76mm	A1 & A2 Arbors

CORDLESS SMOOTH CUT BI METAL HOLE SAW KITS



Description	Cat No	Hole Saw Sizes	Arbors and Accessories
General Purpose Kit	KCS07011	16mm, 20mm, 25mm, 29mm, 30mm, 32mm & 38mm	A18 Dual Hex Chuck
General Purpose Kit 1	KCS06001	16mm, 20mm, 22mm, 25mm, 32mm & 40mm	
Electricians Kit	KCS03001	20mm, 25mm, & 32mm	

TCT STAINLESS STEEL HOLE SAW KITS

Description	Cat No	Hole Saw Sizes
TCT Stainless Steel Hole Saw Kit	KSM07001	16mm, 20mm, 22mm, 25mm, 32mm, 40mm & 50mm

MULTI PURPOSE HOLE SAW KITS



Description	Cat No	Hole Saw Sizes	Arbors and Accessories
General Purpose Kit 1	KMP09021	19mm, 22mm, 29mm, 35mm, 44mm, 51mm, 57mm, 64mm & 68mm	A1E & A17-38E FREE XA014C
General Purpose Kit 2	KMP11021	19mm, 22mm, 29mm, 35mm, 38mm, 44mm, 51mm, 57mm, 64mm, 68mm & 76mm	A1E & A17-38E FREE XA014C
Downlight Hole Saw Kit	KMP12011	35mm, 40mm, 44mm, 51mm, 60mm, 65mm, 70mm, 73mm, 76mm, 83mm, 86mm, & 92mm	XA17-38 (supplied with carbide tipped pilot drill)

DIAMOND BRICK AND MASONRY DRI CORE DRILL KIT



Description	Cat No	Core Drill Sizes	Arbors	Accessories
Diamond Dri-Core Drill Kit	BMKIT1	38mm, 52mm, 65mm, 117mm & 127mm	BMA1, BMA2, BMA1240 & BMA2240	BMA3200 Pilot Drill & BMA5 Drift Key

DIAMOND TILE DRILL KITS



Description	Cat No	Tlile Drill Sizes	Accessories
Diamond Tile Drill Kit 2	KD2000TD1	5mm, 6mm, 6.5mm, 8mm, 10mm &12mm	Core Ejector Pin



ARBORS AND ACCESSORIES
ULTI MATE RAPID RELEASE ARBOR SYSTEM

SUPER FAST TOOL FREE CHANGES BETWEEN DIFFERENT DIAMETERS AND TYPES OF HOLE SAW AND EASIER CORE EJECTION!

Ulti-Mate from Starrett offers super fast, tool free changes between different diameters and types of hole saw, without adjustment of the drill chuck. Removal of cores from a hole saw after a cut is also much improved by the rapid release of the hole saw from the arbor.



A3 A3-6 A3-3 A3-4 A3-5 A3-7 A3-8 A014M

Cat. No.	Description
A3	ULTI-MATE hole saw arbor with pilot drill
A3-6	ULTI-MATE hole saw arbor with pilot drill and one of each of the standard hole saw adapters
A3-3	Three ULTI-MATE hole saw adapters, suitable for hole saws from 14mm - 30mm / 9/16" - 1.3/16"
A3-4	Three ULTI-MATE hole saw adapters, suitable for hole saws from 32mm - 102mm / 1.1/4" - 4"
A3-5	ULTI-MATE hole saw adapter, suitable for heavy duty cutting on large diameter saws (102mm / 4" and greater)
A3-7	ULTI-MATE hole saw arbor with pilot drill, 20mm / 25/32" and 25mm / 1" Fast Cut Hole Saws and hole saw adapters.
A3-8	ULTI-MATE hole saw arbor with pilot drill, 20mm / 25/32" and 25mm / 1" Deep Cut Hole Saws and hole saw adapters.

ULTI-MATE
Rapid Release Arbor System



ATTACHING A HOLE SAW



LOCKING A HOLE SAW



RELEASING A HOLE SAW



REUSING THE ADAPTERS



USING THE ULTI-MATE!

ATTACHING A HOLE SAW

Screw the appropriate adapter on to the hole saw and push the hole saw and adapter down the drill (1). When the hole saw and adapter can be pushed no further, turn the hole saw and the collar will click on (2).

LOCKING A HOLE SAW

To lock a hole saw on to the ULTI-MATE, turn the collar on the arbor so that the arrow on the base of the arbor and the arrow on the collar are not aligned. (1). This will then lock the saw and the arbor together, and ensure that the hole saw cannot be accidentally released whilst drilling.



RELEASING A HOLE SAW

To release the hole saw, align the arrow on the collar and the arrow on the base of the arbor (1) and pull the collar back (2). The saw will then be released. The release is spring loaded so please take care when releasing the saw!

REUSING THE HOLE SAW ADAPTERS

Once the hole saw has come to the end of its useful life, the arbor adapters can be reused, even if intensive use has resulted in the adapters becoming very firmly attached to the hole saw. Place the complete assembly in a vice, using the flats on either side of the arbor to hold the assembly still (1). The used hole saw can then be unscrewed from the adapter using a pair of grips or similar tool.



ARBORS AND ACCESSORIES
KWIK CHANGE ARBOR SYSTEM

FAST, TOOL FREE CHANGES BETWEEN DIFFERENT SIZES AND TYPES OF HOLE SAW, PLUS A SIMPLE METHOD OF CORE EJECTION AND HOLE ENLARGEMENT.

The new Kwik Change arbor system from Starrett offers fast, tool free changes between different sizes and types of hole saws, plus a simple method of core ejection and hole enlargement. Suitable for the standard Starrett hole saw range up to 152mm / 6" diameter, Kwik Change will be an invaluable addition for any regular hole saw user.

Kwik Change Arbor and Hole Saw System	
Cat No	**Description**
A6	Kwik Change Chuck - Hex Shank
A6-1	Kwik Change Chuck - SDS Shank
A6-2	Kwik Change Arbor for 14-30mm hole saws
A6-3	Kwik Change Arbor for 32-152mm hole saws
A015C	Kwik Change High Speed Steel Pilot Drill
XA015C	Kwik Change Carbide Tipped Pilot Drill

KWIK-CHANGE BETWEEN HOLE SAWS!

KWIK-CHANGE PILOT DRILL!

CORE EJECTION & HOLE ENLARGEMENT!

Kwik Change Kits | Hex Shank Chuck		
Cat No	**Description**	**Kit Contents**
A6-4	Kwik Change Arbor Kit with High Speed Steel Drill	Kwik Change Chuck, one A6-2 Arbor, one A6-3 Arbor, one A015C Pilot Drill
A6-5	Kwik Change Arbor Kit with Carbide Tipped Drill	Kwik Change Chuck, one A6-2 Arbor, one A6-3 Arbor, one XA015C Pilot Drill
A6-8	Kwik Change Arbor Kit with Fast Cut hole Saws	Kwik Change Chuck, two A6-2 Arbors, one A6-3 Arbor, one A015C Pilot Drill, one 20mm (25/32"), one 25mm (1") and one 32mm / (1.1/4") Fast Cut Bi Metal Hole Saws
A6-10	Kwik Change Arbor Kit with Deep Cut Hole Saws	Kwik Change Chuck, two A6-2 Arbors, one A6-3 Arbor, one A015C Pilot Drill, one 20mm (25/32"), one 25mm (1") and one 32mm (1.1/4") Deep Cut Bi Metal Hole Saws

Kwik Change Chuck | SDS Shank Chuck		
A6-6	Kwik Change Arbor Kit with High Speed Steel Drill	Kwik Change Chuck, one A6-2 Arbor, one A6-3 Arbor, one A015C Pilot Drill
A6-7	Kwik Change Arbor Kit with Carbide Tipped Drill	Kwik Change Chuck, one A6-2 Arbor, one A6-3 Arbor, one XA015C Pilot Drill
A6-9	Kwik Change Arbor Kit with Fast Cut hole Saws	Kwik Change Chuck, two A6-2 Arbors, one A6-3 Arbor, one A015C Pilot Drill, one 20mm (25/32"), one 25mm (1") and one 32mm (1.1/4") Fast Cut Bi Metal Hole Saws
A6-11	Kwik Change Arbor Kit with Deep Cut Hole Saws	Kwik Change Chuck, two A6-2 Arbors, one A6-3 Arbor, one A015C Pilot Drill, one 20mm (25/32"), one 25mm (1") and one 32mm (1.1/4") Deep Cut Bi Metal Hole Saws

KWIK-CHANGE | ARBOR

- Attach the arbors to all regularly used hole saws.
- Change between different sizes of saw at the push of a button!



Push the button on the arbor and pull the hole saw down the pilot drill. To use a new hole saw, push the button on the arbor and slide the hole saw forward to remove it.

KWIK-CHANGE | PILOT DRILL

- Pull back the chrome collar on the chuck to change the pilot drill.
- No tools required!
- Caution: Pilot drills may be hot after use.

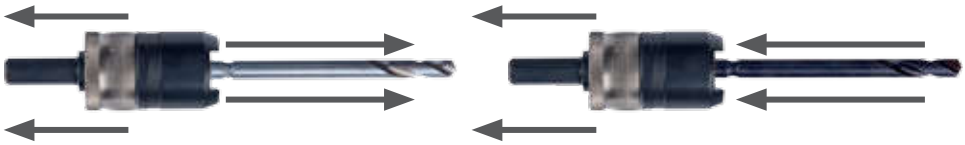

Pull back the collar on the chuck to remove the pilot drill, to insert a new drill pull back the collar on the chuck and insert the new drill.

KWIK-CHANGE | HOLE ENLARGEMENT

- Attach arbors to hole saws of the same size as the existing hole and the same size as the required hole.
- Attach the larger diameter hole saw to the Kwik-Change chuck.
- Attach the smaller diameter hole saw to the drill and slide it down inside the larger diameter saw.
- Drill the hole. **This system is recommended for overhead or vertical surfaces only.**



Attach the larger hole saw to the chuck, slide the smaller of the two hole saws inside the larger hole saw and use it as a pilot for the new, larger hole.

KWIK-CHANGE | CORE EJECTION

- If the core is stuck in the hole saw after drilling a hole, press the arbor button and slide the hole saw and attached arbor off the drill.
- The pilot drill can then be used to push the core out of the saw using the side flutes or the holes in the base of the saw.
- Caution: Cores may be hot and sharp.



If the core is still stuck in the saw, the pilot drill can be used to push the core out of the saw using the holes in the base of the hole saw.



ARBORS AND ACCESSORIES


A1


A2


A2E


A4


A10


A17-38

STANDARD ARBORS
WITH HIGH SPEED STEEL PILOT DRILL

Arbor suitable for use with FCH and CT hole saws. (Diamond hole saw applications will always require an arbor with a carbide tipped pilot drill).

Cat. No.	Fits Hole Saw Diameter Inch/mm	Shank Size mm (inch)
A1	14 - 30mm (9/16" - 1.3/16")	8.75mm (11/32") Hex
A4		6.5mm (1/4") Hex
A2 - Quick-Hitch	32 - 210mm (1.1/4" - 8.9/32")	11mm (7/16") Hex
A10 - Quick-Hitch	32 - 152mm (1.1/4" - 6")	8.75mm (11/32") Hex

WITH CARBIDE DRILL

Cat. No.	Fits Hole Saw Diameter mm (inch)	Shank Size mm (inch)
XA1	14 - 30mm (9/16" - 1.3/16")	8.75mm (11/32") Hex
XA2 - Quick-Hitch	32 - 210mm (1.1/4" - 8.9/32")	11mm (7/16") Hex
XA10 - Quick-Hitch	32 - 152mm (1.1/4" - 6")	8.75mm (11/32") Hex

EXTENDED LENGTH

Arbor suitable for use with DCH and MPH hole saws.

Cat. No.	Fits Hole Saw Diameter mm (inch)	Shank Size mm (inch)
A1E	14 - 30mm (9/16" - 1.3/16")	8.75mm (11/32") Hex
A4E		6.5mm (1/4") Hex
A2E - Quick-Hitch	32 - 210mm (1.1/4" - 8.9/32")	11mm (7/16") Hex
A10E - Quick-Hitch	32 - 152mm (1.1/4" - 6")	8.75mm (11/32") Hex

LOCKING ARBOR

Cat. No.	Fits Hole Saw Diameter mm (inch)	Shank Size mm (inch)
A17-38	32mm - 210mm (1-1/4" - 8.9/32")	8.75mm (11/32") Hex ** With Extended Length HSS Pilot Drill
A17-38E**	32mm - 210mm (1-1/4" - 8.9/32")	
XA17-38 Carbide Tipped	32mm - 210mm (1-1/4" - 8.9/32")	



SDS PLUS SHANK
WITH PILOT DRILL



A1-1 A2-1

The SDS-plus shank allows the arbors to be used in SDS-plus rotary hammer drills with the hammer action turned off.

Cat. No.	Fits Hole Saw Diameter Inch/mm	Shank Size (Inch/mm)
A1-1	14 - 30mm (9/16" - 1.3/16")	8.75mm (11/32") Hex
A2-1	32 - 210mm (1.1/4" - 8.9/32")	11mm (7/16") Hex

ARBOR EXTENSION



300mm (12") extension bar.

Cat. No.	For Arbor	Fits Chuck Size
A5	A2, A2E or 'X' equivalents	13mm - 1/2"
A15	A1, A1E, A10, A10E, A17-38, A17-38E or 'X' equivalents	9.5mm - 3/8"

ARBOR PILOT DRILL



A014CE A014C XA014C SMD6 A014M A015C XA015C

HIGH SPEED STEEL

Cat. No.	Fits Starrett Arbor Nos.	For Use with Saw Types
A014C	All Arbors	For All FCH Series Saws
A014CE	Extended Length Pilot Drill Fits All Starrett Arbors except A3 Ulti Mate	For DCH and MPH Hole Saws
SMD6	-	Replacement drill for SM series hole saws
A014M	Fits Starrett A3 Ulti Mate Arbor	For all FCH, DCH, CT and MPH hole saws
A015C	Fits Starrett A6 Kwik Change Arbor System	For all FCH, DCH, CT and MPH hole saws

CARBIDE TIPPED

Cat. No.	Fits Starrett Arbor Nos.	For Use with Saw Types
XA014C	All Arbors	For all CT, MPH and D Series Saws
XA015C	Fits Starrett A6 Kwik Change Arbor System	For all CT, MPH and D Series Saws

ARBOR ADAPTOR

Allows use of hole saws up to 152mm (6").

Cat. No.	Description
A12	Adaptor screws on to arbors with a 1/2"- 20 screw thread and allows use of hole saws up to 152mm (6")

'OOPS ARBOR'

HOLE ENLARGEMENT ARBOR

Replacing the pilot drill, the A19 allows diameters to be enlarged by attaching a saw of the same size to that of the existing hole. This saw then acts as the pilot for the larger diameter saw that is attached to the arbor.



A19







Cat. No.	Regular Arbor That Fits Outer Hole Saw and Size of Enlarging Diameter	Pilot Hole Saw Diameter that Fits A19 Arbor
A19	A1 21mm - 30mm (13/16" - 1-3/16") A2 or A10 32mm - 152mm (1-1/4" - 6")	14mm - 140mm (9/16" - 5.1/2") Minimum hole enlargement is 4.7mm (3/16") between pilot hole saw and cutting saw diameter

DEBRIS COLLECTOR

NO CLEAN UP, NO DRILL DAMAGE, NO DEBRIS SPREAD

Debris Collector	
Cat No	**Description**
DB2	Debris Collector

FEATURES:

- Bowl flexes with minimal pressure as the hole is sawn.
- Huge potential time saving - there is no need to mask at risk areas prior to sawing or clean up after sawing.
- Keeps dust and other debris out of the motor of the drill.
- Suitable for hole saws up to and including 121mm (4 3/4").
- **STAGE ONE** | Pass the shank of the arbor through the hole at the bottom of the DB2 and attach to the drill in the normal way. Always ensure that the Debris Collector spins freely prior to use.
- **STAGE TWO** | Site the saw for cutting the hole. The Debris Collector can be pulled down to provide a better view of the work area.
- **STAGE THREE** | Drill the hole!
- **STAGE FOUR** | All the dirt and debris from the cut hole is collected inside the Debris Collector!

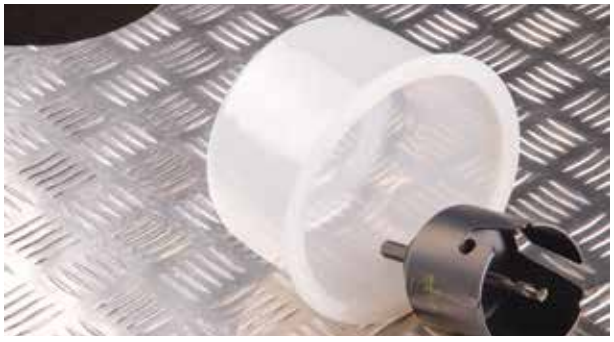

STAGE ONE



STAGE TWO



STAGE THREE



STAGE FOUR



CORE EJECTOR

A SIMPLE, BUT HIGHLY EFFECTIVE METHOD OF EJECTING THE CORE FROM A HOLE SAW AFTER COMPLETION OF THE CUT

- Select the appropriate size of ejector for the hole saw.
- Where it is necessary to assemble the two parts of the core ejector, twist the spring on to the ejector plate until it locks in place.
- Twist the spring on the assembled core ejector over the pilot drill until the pilot drill is protruding from the plate.
- Drill the hole.
- Please note that using the core ejector will reduce the cutting depth of the saw. The table below lists the recommended optimum maximum material thickness for each type of hole saw. The core ejector will function at greater material thicknesses than those listed, however its effectiveness will diminish.



- Assembled core ejector attached to a hole saw.



- After the hole has been drilled, the core can clearly be seen at the end of the pilot drill.

Core Ejector	
Cat No	**Description**
KA8-1	Core Ejector | suitable for 20 - 24mm hole saws
KA8-2	Core Ejector | suitable for 25 - 38mm hole saws
KA8-3	Core Ejector | suitable for 40 - 60mm hole saws
KA8-4	Core Ejector | suitable for 64 - 86mm hole saws
KA8-5	Core Ejector | suitable for 89 - 127mm hole saws
KA8-6	Core Ejector | suitable for 133 - 210mm hole saws

Core Ejector Cutting Recommendations	
Hole Saw Product Code	**Recommended Maximum Material Thickness**
FCH, DCH, CT	7mm
D and MPH	5mm

PLEASE NOTE

In some applications it is possible that the core may be ejected from the saw at high speed. Please always use safety goggles and glasses and take extra care if drilling vertically.





PRECISION MAKES THE DIFFERENCE

WHEN WINNING MATTERS.

Starrett Video Borescopes are ideal for inspection of inaccessible areas. Applications include viewing hard-to-see areas during machining operations, inspection of internal parts of engines and machinery, A/C systems, and interior structures of walls.



Model 699-10

Starrett®

00 44 (0)1835 863501 • www.**starrett**.co.uk



HACKSAWS



HACKSAW FRAMES

140
CLOSED GRIP

Light duty hacksaw frame accepting 300mm (12") blades. The blades can be tensioned by a single wing nut in the front of frame.



FEATURES

- 300mm (12") Starrett bi-metal unique, high speed steel Safe-Flex hacksaw blade included.

Cat. No.	Description
K140	Non-Adjustable Light Duty Hacksaw Frame, Closed Grip

145
CLOSED GRIP - HIGH TENSION

Easy to use high tension heavy duty hacksaw frame with a closed grip and an efficient adjustment lever.



FEATURES

- 300mm (12") Starrett bi-metal unique, high speed steel Safe-Flex hacksaw blade included.
- The handle is covered by rubber overmould for comfortable grip.
- Six turns of the tensioning handle will tension the blade to the recommended point.

Cat. No.	Description
K145	High-Tension Heavy-Duty Hacksaw Frame, Closed Grip



HACKSAW FRAMES

147
BI-METAL COMPASS SAW

The ideal tool for cutting plasterboard, featuring a heavy-duty, variable pitch, bi-metal blade to cut most materials and provide an extra-long cutting life.

FEATURES

- 225mm (9") Starrett bi-metal unique blade included.
- Heavy duty plastic handle for ideal comfort and the best cutting leverage provides easy cutting.
- The blade rotates full 360° to easily cut at any angle.



Cat. No.	Description
K147	Compass Saw, Bi-Metal

148
PVC SAWS

Used for cutting PVC and ABS materials. Also used for cutting plasterboard, plywood and general-purpose cutting.

FEATURES

- It is shipped with a 300mm (12") or 450mm (18") blade length.
- Featuring cast aluminium handle.



Cat. No.	Description
148-12	Handle with 300mm (12") Blade
148-18	Handle with 450mm (18") Blade

REPLACEMENT BLADE FOR 147

FEATURES

- Heavy-duty, variable pitch, bi-metal blade cuts most materials and has extra-long cutting life.

Cat. No.	Description
PT26689	225mm (9)" replacement blade for 147 compass saw

REPLACEMENT BLADE FOR 148

FEATURES

- Used for cutting plasterboard, plywood and general purpose cutting.

Cat. No.	Dimensions
PVC-12	300mm(12")
PVC-18	450mm (18")

HACKSAW BLADES

The comprehensive range of hand hacksaw blades from Starrett are manufactured to the most exacting standards to offer optimum cutting performance across the broadest range of materials.

BI-METAL UNIQUE
HIGH SPEED STEEL SAFE-FLEX

A patented solid state diffusion process produces the industry's most advanced bi metal hacksaw blade.



FEATURES

- Massive increase in tooth strength and reduction in tooth breakage and fracture when compared against traditional bi metal blades.
- Excellent for interrupted cuts in cramped places or where the blade is subject to bending or twisting stresses.

2 Blades on card	10-Blade Pack	50 Blade Tube Pack	Dimensions	TPI
Cat. No.	Cat. No.	Cat. No.	Length x Width x Thickness	(25mm)
KBS1218-2	KBS1218-10	BS1218	300mm x 13mm x 0.65mm 12" x 1/2" x .025"	18
KBS1224-2	KBS1224-10	BS1224		24
KBS1232-2	KBS1232-10	BS1232		32

REDSTRIPE
HIGH SPEED STEEL BLADES



FEATURES

- Ideal when the blade is not subject to bending and twisting stresses.
- Uniformly hardened blade holds the edge when cutting hard-to-machine alloys, maintaining the straightness of the cut.

2 Blades on card	10-Blade Pack	50 Blade Tube Pack	Dimensions	TPI
Cat. No.	Cat. No.	Cat. No.	Length x Width x Thickness	(25mm)
KRS1218-2	KRS1218-10	RS1218	300mm x 13mm x 0.65mm 12" x 1/2" x .025"	18
KRS1224-2	KRS1224-10	RS1224		24
KRS1232-2	KRS1232-10	RS1232		32



HACKSAW BLADES

GREY-FLEX
HIGH CARBON STEEL

These all-purpose blades are an economical alternative when cutting mild steel, copper, brass, aluminium and other similar materials. The blades feature an all carbon construction with a hardened cutting edge and flexible back.



2 Blades on card	10-Blade Pack	50 Blade Tube Pack	Dimensions	TPI
Cat. No.	Cat. No.	Cat. No.	Length x Width x Thickness	(25mm)
KGF1218-2	KGF1218-10	GF1218	300mm x 13mm x 0.65mm 12" x 1/2" x .025"	18
KGF1224-2	KGF1224-10	GF1224		24
KGF1232-2	KGF1232-10	GF1232		32

CARBIDE GRIT
HEAVY DUTY CUTTING



- Durable steel construction with a uniform application of carbide grit bonded to the cutting edge.
- An ideal tool for cutting ceramic, fibreglass, plastics, glass resins and other abrasive materials that cannot be effectively cut by conventional blades.

Cat. No.	Length x Width x Thickness	Tooth Type
X1258	300mm x 16mm x .80mm 12" x 5/8" x .032"	Grit

CARBIDE GRIT ROD SAW
CERAMICS AND FIBREGLASS CUTTING

An ideal tool for cutting ceramics, fibreglass, plastics, glass resins or any other abrasive materials that cannot be effectively cut by conventional blades.



- Constructed of a tough steel alloy rod that has been coated by carbide grit.
- This unique rod saw blade effectively cuts abrasive materials.

Cat. No.	Length x Width x Thickness	Tooth Type
X1200	300mm x 2.4mm 12" x 3/32"	Grit







POWER HACKSAW BLADES



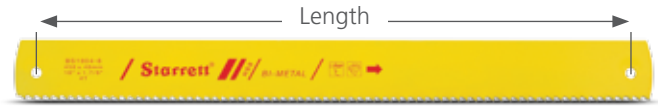

Starrett power hacksaw blade lengths as listed below are measured as the distance between the centre of the two pin holes.

BI-METAL HSS
HIGH SPEED STEEL TEETH

The bi-metal construction of these power hacksaw blades provides exceptional cutting action in a wide variety of applications. The high speed steel teeth and durable alloy steel backing resist breakage and can handle irregular shaped work pieces and interrupted cuts.

Cat No.	Length x Width x Thickness (mm)	TPI TP/25mm	Pinhole Diameter (mm)	Pack Quantity
BS1210-5	300 x 28 x 1.25	10	8.5	5 blades per pack
BS1214-5		14		
BS1410-5	350 x 28 x 1.25	10		
BS1414-5		14		
BS1406-6	350 x 34 x 1.60	6		
BS1410-6		10		
BS1606-6	400 x 34 x 1.60	6		
BS1610-6		10		
BS1606-7	400 x 41 x 2.00	6		
BS1610-7		10		
BS1806-6	450 x 34 x 1.60	6		
BS1810-6		10	10.5	
BS1804-7	450 x 41 x 2.00	4		
BS1806-7		6		
BS1810-7		10		

Cat No.	Length x Width x Thickness (mm)	TPI TP/25mm	Pack Quantity
BS350-6	350 x 34 x 2.00	6	5 blades per pack
BS350-10		10	
BS400-4	400 x 34 x 2.00	4	
BS400-6		6	
BS400-10		10	
BS450-4	450 x 41 x 2.00	4	
BS450-6		6	
BS450-10		10	
BS500-6	500 x 54 x 2.5	6	1 blade per pack
BS550-6	550 x 54 x 2.5	6	
BS575-4	575 x 54 x 2.50	4	
BS575-6		6	
BS600-4	600 x 54 x 2.5	4	
BS600-6		6	
BS650-6	650 x 54 x 2.5	6	



HACKSAW HSS POWER

REDSTRIPE HSS
SOLID HIGH SPEED STEEL POWER

The solid, fully hardened molybdenum high speed steel composition of Redstripe power hacksaw blades delivers extended life and efficient cutting action in a broad range of materials. These blades can withstand heavier feed pressures and provide faster cut rates than blades made from composite designs. Redstripe power hacksaw blades will effectively cut tough alloys such as stainless steels.



Cat No.	Length x Width x Thickness (mm)	TPI TP/25mm	Pinhole Diameter (mm)	Pack Quantity
RS1210-5	300 x 25 x 1.25	10	8.5	5 blades per pack
RS1214-5		14	8.5	
RS1410-5	350 x 25 x 1.25	10	8.5	
RS1414-5		14	8.5	
RS1406-6	350 x 32 x 1.60	6	8.5	
RS1410-6		10	8.5	
RS1414-6		14	8.5	
RS1606-6	400 x 32 x 1.60	6	8.5	
RS1610-6		10	8.5	
RS1604-7	400 x 38 x 2.00	4	8.5	
RS1606-7		6	8.5	
RS1706-6	425 x 32 x 1.60	6	8.5	
RS1710-6		10	8.5	
RS1806-6	450 x 32 x 1.60	6	10.5	
RS1810-6		10	10.5	
RS1804-7	450 x 38 x 2.00	4	10.5	
RS1806-7		6	10.5	
RS1810-7		10	10.5	
RS2006-7	500 x 38 x 2.00	6	10.5	
RS2010-7		10	10.5	
RS2004-8	500 x 45 x 2.25	4	10.5	1 blade per pack
RS2110-7	525 x 38 x 2.00	10	10.5	
RS2104-8	525 x 45 x 2.25	4	10.5	
RS2106-8		6	10.5	
RS2404-8	600 x 45 x 2.25	4	12.5	
RS2406-8		6	12.5	
RS2404-0	600 x 50 x 2.50	4	12.5	
RS2406-0		6	12.5	
RS2604-0	650 x 50 x 2.50	4	12.5	
RS3004-0	750 x 63 x 2.50	4	12.5	

Cat No.	Length x Width x Thickness (mm)	TPI TP/25mm	Pack Quantity
RS300-6	300 x 32 x 2.00	6	5 blades per pack
RS300-10		10	
RS350-6	350 x 32 x 2.00	6	
RS350-10		10	
RS400-4	400 x 32 x 2.00	4	
RS400-6		6	
RS400-10		10	
RS450-4	450 x 38 x 2.00	4	
RS450-6		6	
RS450-10		10	
RS500-4	500 x 45 x 2.00	4	
RS500-6		6	
RS500-10		10	
RS550-4	550 x 45 x 2.00	4	1 blade per pack
RS550-6		6	
RS550-10		10	
RS575-4	575 x 50 x 2.50	4	
RS575-6		6	
RS600-4	600 x 50 x 2.50	4	
RS600-6		6	
RS650-4	650 x 55 x 2.50	4	
RS650-6		6	
RS700-4	700 x 55 x 2.50	4	
RS700-6		6	
RS850-4	850 x 60 x 3.00	4	
RS850-6		6	
RS1000-2.1/2	1000 x 126 x 3.50	2.5	



PRECISION MAKES THE DIFFERENCE

Starrett BYTEWISE

NO CONTACT IS THE SOLUTION.

Profile360™ is an in-line, real-time, non-contact solution for continuously monitoring key profile dimensions in complex shapes such as rubber, ceramic, plastic, and wood-plastic composite extrusions, roll-formed metal profiles, and profiled wire.



Starrett®

00 44 (0)1835 863501 • www.**starrett**.co.uk



JIG SAW BLADES

BI-METAL UNIQUE JIG SAW BLADES

UNIFIED SHANK

Starrett Unified Shank jig saw blades incorporate the Starrett exclusive bi-metal unique process technology. Blades made from this process resist breakage, cut faster and last longer than conventional saws. Unified Shank jig saws are available in two-blade packs, five-blade packs, twenty-blade packs and in various assortment packs.





	2 Blades per Pack	5 Blades per Pack	20 Blades per Pack	100 Blades per Pack	Dimensions*	TPI		
	Cat. No.	Cat. No.	Cat. No.	Cat. No.	Length x Width x Thickness	(25mm)	Tooth	Set
WOOD CUTTING	BU36T-2	BU36T	BU36T-20	-	75mm x 7.5mm x 1.3mm 3" x 5/16" x .050"	6	Ground	Tapered
	BU36-2	BU36	BU36-20	-		6	Skip	Alternate
	BU38-2	BU38	BU38-20	-		8	Regular	Alternate
	BU310T-2	BU310T	BU310T-20	BU310T-100		10	Ground	Tapered
	BU310DT-2	BU310DT	BU310DT-20	-		10	Ground	Tapered, Downstroke Cut
	BU46-2	BU46	BU46-20	BU46-100	100mm x 9.5mm x 1.3mm 4" x 3/8" x .050"	6	Skip	Alternate
	BU56-2	BU56	BU56-20	BU56-100	125mm x 9.5mm x 1.3mm 5" x 3/8" x .050"	6	Skip	Alternate
MULTI-PURPOSE	BU214-2	BU214	BU214-20	BU214-100	50mm x 7.5mm x 1mm 2" x 5/16" x .040"	14	Regular	Wavy
	BU218-2	BU218	BU218-20	BU218-100	50mm x 9.5mm x 1mm 2" x 3/8" x .040"	18	Regular	Wavy
	BU214S-2	BU214S	BU214S-20	-	50mm x 4.5mm x 1mm 2" x 3/16" x .040"	14	Scroll	Wavy
	BU41014-2	BU41014	BU41014-20	-	100mm x 9.5mm x 1mm 4" x 3/8" x .040"	10-14	Varipitch	Wavy
	BU418-2	BU418	BU418-20	BU418-100		18	Regular	Wavy
METAL CUTTING	BU224-2	BU224	BU224-20	-	50mm x 7.5mm x 1mm 2" x 5/16" x .040"	24	Regular	Wavy
	BU232-2	BU232	BU232-20	-		32	Regular	Wavy
	BU224S-2	BU224S	BU224S-20	-	50mm x 4.5mm x 1mm 2" x 3/16" x .040"	24	Scroll	Wavy
	BU424-2	BU424	BU424-20	-	100mm x 9.5mm x 1mm 4" x 3/8" x .040"	24	Regular	Wavy
	CTU218-2	-	-	-	50mm x 7.5mm x 1mm 2" x 5/16" x .040"	18	Carbide Tipped	Alternate
	CTU224-2	-	-	-		2	Carbide Tipped	Alternate
MULTI-PURPOSE CARBIDE GRIT	BU230X-2	BU230X	BU230X-20	-	50mm x 7.5mm x 1mm 2" x 5/16" x .040"	Coarse CG	Cont. Grit	-

* Length dimension references tooth bearing section of jig saws. The total length, including blade shank, is approximately 25mm (1") longer.



DUAL CUT JIG SAW BLADES
UNIFIED SHANK

The two new wood-cutting saw designs with teeth in both directions offer a burr-free cut on both sides. Bi-metal unique saw technology provides 170% greater resistance to tooth breakage, longer life and a lower cost per cut than other blade manufacture techniques.







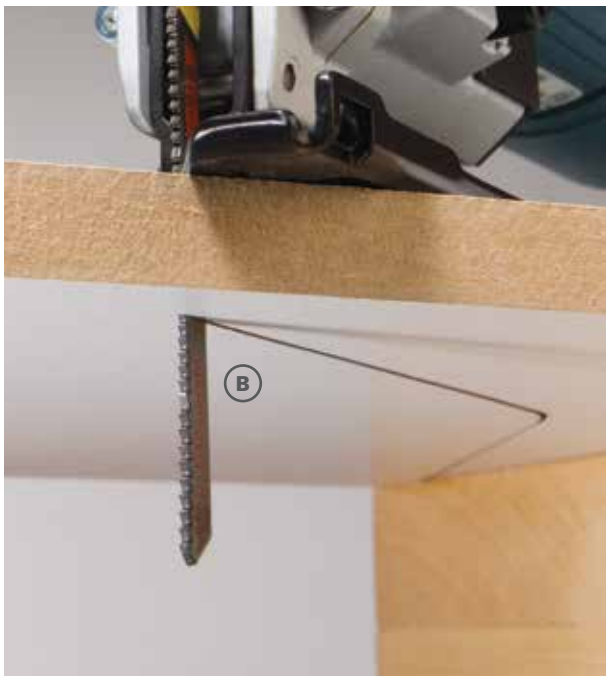

2 Blade Pack Cat. No.	Dimensions* Length x Width x Thickness	Description
BU3DC-2	75mm x 8mm x 1.5mm 3" x 5/16" x .060"	75mm (3") Dual Cut Jig Saw Blade
BU2DCS-2	50mm x 5mm x 1.3mm 2" x 3/16" x .050"	50mm (2") Scroll-Cutting Dual Cut Jig Saw Blade

* Length dimension references tooth bearing section of jig saws. The total length, including blade shank, is approximately 25mm (1") longer.

PERFECT FINISH ON BOTH SIDES! Ⓐ Ⓑ

JIG SAW KITS
UNIFIED SHANK JIG SAW BLADE ASSORTMENT PACK



Cat. No.	Description
BU1	Wood Cutting Assortment Pack: Includes one each: BU36, BU46, BU38, BU310T and BU214S
BU2	Multi-Purpose Assortment Pack: Includes one each: BU46, BU310T, BU214, BU224S and BU232
BU3	Metal Cutting Assortment Pack: Includes one each: BU41014, BU214, BU224, BU224S and BU232
BU4	Unified Shank Assortment Pack: Includes one each: BU36T, BU36, BU46, BU56, BU38 BU310T, BU310DT, BU2DCS, BU3DC, BU41014, BU214, BU214S, BU218, BU418, BU23OX, BU224, BU224S, BU424, BU232
BU5	New Unified Shank Assortment Pack: Includes one each: BU36, BU46, BU310T, BU41014 and BU214
BU6	New Unified Shank Assortment Pack: Includes one each: BU36, BU46, BU310T, BU3DC, BU2DCS, BU41014,BU214, BU214S, BU218, BU418, BU224, BU224S, BU424 and BU232

	WOOD CUTTING BLADES									MULTI USE BLADES					METAL CUTTING BLADES						
Exclusive Unified Shank Jig Saw Blades																					
Cutting length	57	75	75	75	75	100	125	75	75	100	50	50	50	100	50	50	50	100	50	55	55
Thickness	1.3	1.3	1.3	1.3	1.3	1.3	1.3	1.3	1.3	1.0	1.0	1.0	1.0	1.0	1.0	1.0	1.0	1.0	1.0	1.0	1.0
Cutting Direction	↕	↕	↑	↑	↑	↑	↑	↑	↓	↑	↑	↑	↑	↑	↕	↑	↑	↑	↑	↑	↑
Aluminium Inox Non Ferrous Metals 0.9-1.6mm																			✓	✓	✓
Aluminium Inox Non Ferrous Metals 1.6-3.2mm										✓						✓	✓	✓			
Aluminium Inox Non Ferrous Metals 3.2-4.8mm										✓			✓	✓							
Aluminium Inox Non Ferrous Metals 4.8-6.4mm										✓	✓	✓									
Wood Soft	★★	★★		★★	★	★		★★	★★	★	★	★	★	★							
Wood Hard	★★	★★	★	★★	★	★	★	★★		★	★	★									
Wood 6-30mm	★★	★★			★			★★	★★	★	★	★	★	★							
Veneer 30-45mm			★	★★	★					★											
Veneer 45-60mm						★	★			★											
Veneer 60-75mm							★														
PVC 3-12mm											★	★									
PVC 12-25mm								★★		★											
Contour cutting	✓											✓				✓					
Curved cutting		✓	✓	✓				✓	✓		✓		✓		✓	✓			✓		
Straight cutting		✓	✓	✓	✓	✓	✓	✓		✓				✓				✓		✓	✓
Fast Cutting			✓	✓	✓	✓	✓	✓							✓						
Acrylic	✓	✓						✓			✓	✓									
Ceramic															✓						
Fibreglass															✓						
Formica	✓	✓							✓												
Plaster							✓														
MDF	✓	✓						✓	✓				✓					✓			
Suspended Floors														✓					✓		
Tubes and profiles										✓				✓					✓		

Cutting Performance			
Excellent	★★	Satisfactory	★

Note: Use of a coolant is recommended for all metal cutting

Starrett®



RECIPROCATING SAWS



RECIPROCATING BLADES

STRAIGHT SHAPE
GENERAL PURPOSE

Fastcut general purpose reciprocating blades provide a comprehensive set of sawing solutions.





2 Blade Packs	5 Blade Packs	20 Blade Packs	Dimensions Length x Width x Thickness	TPI (25mm)
Cat. No.	Cat. No.	Cat. No.		
B414-2	B414-5	B414-20	100mm x 19mm x 0.90mm 4" x 3/4" x .035"	14
B418-2	B418-5	B418-20		18
B424-2	B424-5	B424-20		24
B66-2	B66-5	B66-20	152mm x 19mm x 0.90mm 6" x 3/4" x .035"	6
B610-2	B610-5	B610-20		10
B614-2	B614-5	B614-20		14
B618-2	B618-5	B618-20		18
B624-2	B624-5	B624-20		24
B818-2	B818-5	B818-20	203mm x 19mm x 0.90mm 8" x 3/4" x .035"	18

TAPERED SHAPE
GENERAL PURPOSE





2 Blade Packs	5 Blade Packs	20 Blade Packs	Dimensions Length x Width x Thickness	TPI (25mm)
Cat. No.	Cat. No.	Cat. No.		
BT63-2	BT63-5	BT63-20	152mm x 19mm x 1.30mm 6" x 3/4" x .050"	3
BT66-2	BT66-5	BT66-20		6
BT6610-2	BT6610-5	BT6610-20		6-10
BT96-2	BT96-5	BT96-20	228mm x 19mm x 1.30mm 9" x 3/4" x .050"	6
BT910-2	BT910-5	BT910-20		10
BT123-2	BT123-5	BT123-20	300mm x 19mm x 1.30mm 12" x 3/4" x .050"	3
BT126-2	BT126-5	BT126-20		6
BT12610-2	BT12610-5	BT12610-20		6-10
BT121014-2	BT121014-5	BT121014-20		10-14

RECIPROCATING BLADES

KING CUT
FIRE RESCUE AND DEMOLITION



2 Blade Packs Cat. No.	5 Blade Packs Cat. No.	20 Blade Packs Cat. No.	Dimensions Length x Width x Thickness	TPI (25mm)	Shape
BR618-2	BR618-5	BR618-20	152mm x 19mm x 0.90mm 6" x 3/4" x .035"	18	Straight
BR61014-2	BR61014-5	BR61014-20		10-14	
BTR61014-2	BTR61014-5	BTR61014-20	152mm x 25mm x 1.60mm 6" x 1" x .063"	10-14	Tapered
BTR6610-2	BTR6610-5	BTR6610-20		6-10	
BR818-2	BR818-5	BR818-20	203mm x 19mm x 0.90mm 8" x 3/4" x .035"	18	Straight
BR81014-2	BR81014-5	BR81014-20	203mm x 19mm x 1.30mm 8" x 3/4" x .050"	10-14	
BTR81014-2	BTR81014-5	BTR81014-20	203mm x 25mm x 1.60mm 8" x 1" x .063"	10-14	Tapered
BTR8610-2	BTR8610-5	BTR8610-20		6-10	
BR91014-2	BR91014-5	BR91014-20	228mm x 19mm x 1.30mm 9" x 3/4" x .050"	10-14	Straight
BTR91014-2	BTR91014-5	BTR91014-20	228mm x 25mm x 1.60mm 9" x 1" x .063"	10-14	Tapered
BTR9610-2	BTR9610-5	BTR9610-20		6-10	
BR121014-2	BR121014-5	BR121014-20	300mm x 19mm x 1.30mm 12" x 3/4" x .050"	10-14	Straight
BTR121014-2	BTR121014-5	BTR121014-20	300mm x 25mm x 1.60mm 12" x 1" x .063"	10-14	Tapered
BTR12610-2	BTR12610-5	BTR12610-20		6-10	

SPECIAL PURPOSE
SCROLL CUTTING



2 Blade Packs Cat. No.	5 Blade Packs Cat. No.	20 Blade Packs Cat. No.	Dimensions Length x Width x Thickness	TPI (25mm)	Shape
SB414-2	SB414-5	SB414-20	100mm x 8mm x 0.90mm 4" x 5/16" x .035"	14	Scroll
SB424-2	SB424-5	SB424-20		24	Scroll

PLASTER CUTTING



2 Blade Packs Cat. No.	5 Blade Packs Cat. No.	Dimensions Length x Width x Thickness	TPI (25mm)	Shape
VB66-2	VB66-5	152mm x 19mm x 0.90mm 6" x 3/4" x .035"	6V	Straight

CARBIDE CUTTING



1 Blade Pack Cat. No.	20 Blade Packs Cat. No.	Dimensions Length x Width x Thickness	TPI (25mm)	Shape
XR6-1	XR6-20	152mm x 19mm x 0.90mm 6" x 3/4" x .035"	#30 Coarse	Straight

RECIPROCATING BLADES

PNEUMATIC

Starrett now offers a line of bi-metal unique saw blades for pneumatic (or air) reciprocating saws. The line includes three blades for metal and a variable pitch multi-purpose blade for composites, steel sheets and wood.





	5 Blades per Pack	20 Blades per Pack	Dimensions	
	Cat. No.	Cat. No.	Length x Width x Thickness	TPI (25mm)
METAL CUTTING	BS226-5	BS226-20	92mm x 13mm x .65mm 3.5/8" x 1/2" x .025"	32
	BS227-5	BS227-20		24
	BS228-5	BS228-20		18
MULTI-PURPOSE	BS229-5	BS229-20		14-18

PALLET DISMANTLING

This bi-metal reciprocating blade is ideal for pallet dismantling and comes with a low price tag with no print or paint. Instead, the identifying information is engraved directly on the blade. The rounded tip prevents the blade from catching while cutting nails and damaged pallets. This blade is packed in bulk boxes of 250 blades.

250 Blade Box	Dimensions
Cat. No.	Length x Width x Thickness
B810P-250	203mm x 19mm x 0.90mm 8" x 3/4" x .035"

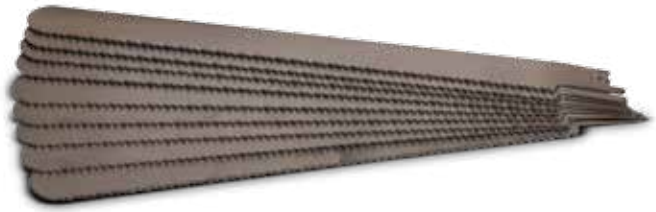

RECIPROCATING BLADE KIT

ASSORTMENT PACK

150mm (6") general purpose blade assortment pack.

Cat. No.	Description
SB6-A	Includes one each of B66, B610, B614, B618, B624





TAPES

TAPE MEASURES

STARRETT

Produced of yellow high visibility ABS plastic, these value priced tape measures are easy to locate and difficult to damage. Their ergonomic design provides a comfortable fit in the hand and incorporates industry standard standout and positive blade lock.

NEW!



FEATURES

- Positive lock holds blade firmly in place.
- Steel belt clip.

Cat. No.	Blade Size	Graduation*
KTS12-12ME-N	13mm (1/2") x 3.5m (12')	Metric / Imperial
KTS12-3.5M-N	13mm (1/2") x 3.5m	Metric
KTS34-16ME-N	19mm (3/4") x 5m (16')	Metric / Imperial
KTS34-5M-N	19mm (3/4") x 5m	Metric

Cat. No.	Blade Size	Graduation*
KTS1-26ME-N	25mm (1") x 8m (26')	Metric / Imperial
KTS1-8M-N	25mm (1") x 8m	Metric

***Blade Graduation Style:**
Metric: Graduated in Millimetres
Metric / Imperial: Graduated Millimetres and 1/16"



TAPE MEASURES

STARRETT EXACT

Produced of high impact resistent ABS plastic for extended case life, these tape measures offer overmould for improved grip. Their ergonomic design fits comfortably in the hand and incorporates industry standard standout and improved blade protection.

NEW!



FEATURES

- Nylon coated blade provides twice the abrasion resistance of other tapes.
- High impact resistent ABS plastic case and rubber plastic overmoulding.
- Includes a steel belt clip.

Cat. No.	Blade Size	Graduation*
KTX12-12ME-N	13mm (1/2") x 3.5m (12')	Metric / Imperial
KTX12-3.5M-N	13mm (1/2") x 3.5m	Metric
KTX34-16ME-N	19mm (3/4") x 5m (16')	Metric / Imperial

Cat. No.	Blade Size	Graduation*
KTX1-16ME-N	25mm (1") x 5m (16')	Metric / Imperial
KTX1-5M-N	25mm (1") x 5m	Metric
KTX1-26ME-N	25mm (1") x 8m (26')	Metric / Imperial
KTX1-8M-N	25mm (1") x 8m	Metric

***Blade Graduation Style:**
Metric: Graduated in Millimetres
Metric / Imperial: Graduated Millimetres and 1/16"



MEASURING TAPES

STARRETT EXACT PLUS

NEW!

High impact resistant PC-ABS plastic for superior case life. These tape measures incorporate heavy overmoulding for improved grip.



FEATURES

- Wider blade providing a 2.7m (9') standout.
- Nylon coated blade provides 6X abrasion resistance of standard blades.
- PC-ABS plastic case and heavy overmoulding.
- Positive lock holds blade firmly in place.
- Black anodized steel belt clip.

Cat. No.	Blade Size	Graduation*
KTXP106-16ME-N	27mm (1.06") x 5m (16')	Metric / Imperial
KTXP106-5M-N	27mm (1.06") x 5m	Metric
KTXP106-26ME-N	27mm (1.06") x 8m (26')	Metric / Imperial
KTXP106-8M-N	27mm (1.06") x 8m	Metric

Cat. No.	Blade Size	Graduation*
KTXP106-33ME-N	27mm (1.06") x 10m (33')	Metric / Imperial
KTXP106-10M-N	27mm (1.06") x 10m	Metric

***Blade Graduation Style:**
Metric: Graduated in Millimetres
Metric / Imperial: Graduated Millimetres and 1/16"



MEASURE STIX

Starrett Measure Stix are manufactured from high quality precision steel. They have a permanent adhesive backing providing convenient, at-a-glance measurements. Can be mounted on work benches, saw tables, drafting tables, etc.



FEATURES

- High quality precision steel for extended service use.
- Sticks to most work surfaces.
- Easily cut to size with scissors.
- Available in left-to-right or right-to-left.

Cat. No.	Reading	Blade Size	Graduation*
SM44W	Imperial – left-to-right	1/2" x 4'	S1 (Imperial)
SM46WRL	Imperial – right-to-left	1/2" x 6'	S1 (Imperial)
SM412ME	Metric/Imperial – left-to-right	13mm x 4m (1/2" x 12')	S12 (Metric/Imperial)
SM412WRL	Imperial – right-to-left	1/2" x 12'	S1 (Imperial)
SM412WMERL	Metric/Imperial – right-to-left	13mm x 4m (1/2" x 12')	S12 (Metric/Imperial)
SM66ME	Metric/Imperial – left-to-right	19mm x 2m (3/4" x 6')	S12 (Metric/Imperial)

* See tape line illustrations below

Short-Line Tape Graduations and Numbering Styles



S1 Imperial

- Graduated in 1/16" on both edges.
- Graduated 1/32" for the first foot of 1/2" and 3/4" wide blades only.
- Numbered in consecutive inches to 1' and repeat on one edge and consecutive inches on the other edge.
- Blades have stud marks every 16" on Imperial lines.



S12 Metric / Imperial

- Lower edge graduated in millimetres and numbered in consecutive centimetres to each decimetre and repeat.
- Top edge graduated in 16ths of an inch and numbered in consecutive inches and numbered at each foot.

KEY CADDY

Heavy-duty die-cast case with a 53cm (21") stainless steel chain and large key ring. Returns keys and other articles automatically.

Available with regular belt clip.



Cat. No.	Description
SK1	Key Caddy with regular belt clip

LONG TAPES

Starrett

STARRETT STEEL BLADE

510 SERIES - CLOSED REEL

The closed reel long tapes are produced with yellow high visibility ABS plastic. These value priced long tape measures are easy to locate and difficult to damage. The steel blade provides a precise measurement of up to 30m (100'). The blade has an uncluttered line and numbering style.



FEATURES

- Produced with easy-to-read graduations.
- Includes a folding hook.

***Blade Graduation Style:**
Metric: Graduated in mm
Metric/Imperial: Millimetres and graduated 1/8"

Cat. No.	Blade Size	Graduation*
KTS510-15M-N	9mm (3/8") x 15m	Metric
KTS510-50ME-N	9mm (3/8") x 15m (50')	Metric / Imperial
KTS510-30M-N	9mm (3/8") x 30m	Metric
KTS510-100ME-N	9mm (3/8") x 30m (100')	Metric / Imperial

STARRETT FIBREGLASS BLADE

538 SERIES - CLOSED REEL

Closed reel fibreglass long tapes are produced with a unique design with rubber plastic overmoulded on an ABS plastic case, providing a durable, comfortable, and highly visible measuring tool. Graduations are printed on both sides of the tape for user convenience.



FEATURES

- Rubber plastic overmoulded on ABS plastic case.
- Graduations on both sides of tape.
- Folding hook ring with snap for storage.



4x FASTER REWIND

Cat. No.	Blade Size	Graduation*
KTS538-30M-N	13mm (1/2") x 30m	Metric
KTS538-100ME-N	13mm (1/2") x 30m (100')	Metric / Imperial

***Blade Graduation Style:**
Metric: Graduated in 2mm
Metric/Imperial: Graduation in 1/8" and 2mm

LONG TAPES

STARRETT EXACT STEEL BLADE

530 SERIES - CLOSED REEL





The closed reel steel long tape features a rugged rewind mechanism. Nylon rollers at case opening to reduce blade wear through sustained field use. Blades are produced with high visibility, easy-to-read graduations.

FEATURES

- Vinyl clad steel case.
- Nylon rollers to reduce blade wear.
- Easy-to-read graduations.
- Folding hook ring.

Cat. No.	Blade Size	Graduation*
530-15CM	9mm x 15m	Metric
530-20CM	9mm x 20m	Metric
530-30CM	9mm x 30m	Metric

***Blade Graduation Style: Metric:** Graduated in Millimetres

REPLACEMENT BLADE

530 SERIES



Cat. No.	Blade Size	Graduation*
LHY530-15CM	3/8" x 15m	Metric
LHY530-20CM	3/8" x 20m	Metric
LHY530-30CM	3/8" x 30m	Metric



LONG TAPES

STARRETT FIBREGLASS BLADE

537 SERIES - OPEN REEL

Open reel fibreglass long tapes are produced with steel exit rollers, permitting the user to measure in adverse environments. The extended rewind handle and rotating knob allow the user to quickly retract the tape into the frame after use.

FEATURES

- Long rewind handle with rotating knob.
- Easy-grip handle accommodates large hands.
- Waterproof ABS frame and case makes cleanup fast and easy.



Cat. No.	Blade Size	Graduation*
KTS537-30M-N	13mm (1/2") x 30m	Metric
KTS537-100ME-N	13mm (1/2") x 30m (100')	Metric/Imperial
KTS537-50M-N	13mm (1/2") x 50m	Metric
KTS537-200ME-N	13mm (1/2") x 50m (200')	Metric/Imperial
KTS537-100M-N	13mm (1/2") x 100m	Metric
KTS537-300ME-N	13mm (1/2") x 100m (300')	Metric/Imperial

***Blade Graduation Style:**
Metric: Graduated in 2 millimetres
Metric/Imperial: Graduated 2 millimetres and 1/8"



UTILITY KNIVES

UTILITY KNIVES

NEW!



Cat. No.	Blade Width	Description
KUS055-N	9mm (3/8")	Small Plastic Slide Locking



Cat. No.	Blade Width	Description
KUS045-N	18mm (.710")	Large Plastic Slide Locking

STARRETT

SMALL SIZE SLIDE LOCKING

Small ABS plastic utility knife features a slide locking system.

FEATURES

- This utility knife works with 9mm (3/8") blade (S05R).
- Blade with 13 break-away segments.

LARGE SIZE SLIDE LOCKING

Large ABS plastic utility knife with a slide locking system.

FEATURES

- This utility knife works with 18mm (.710") blade (S06R).
- Blade with 8 break-away segments.

STARRETT EXACT







Cat. No.	Blade Width	Description
KUX035-N	9mm (3/8")	Small Plastic Automatic Locking

Cat. No.	Blade Width	Description
KUX040-N	9mm (3/8")	Small Plastic Screw Locking

Cat. No.	Blade Width	Description
KUX025-N	.18mm (.710")	Large Plastic - Automatic Locking

AUTOMATIC LOCKING METAL BLADE GUIDE

Small plastic utility knife with automatic locking, metal blade guide.

FEATURES

- This utility knife works with 9mm (3/8") blade (S05R).
- ABS plastic body and rubber plastic overmoulded.
- Blade with 13 break-away segments.

SCREW LOCKING METAL BLADE GUIDE

Small plastic utility knife with screw locking, metal blade guide.

FEATURES

- This utility knife works with 9mm (3/8") blade (S05R).
- ABS plastic body and rubber plastic overmoulded.
- Blade with 13 break-away segments.

AUTOMATIC LOCKING METAL BLADE GUIDE

Large plastic utility knife with automatic locking metal blade guide.

FEATURES

- This utility knife works with 18mm (.710") blade (S06R).
- ABS plastic body and rubber plastic overmoulded.
- Blade with 8 break-away segments.



STARRETT EXACT PLUS SERIES

S011 HIDDEN EDGE - RETRACTABLE BLADE

NEW!

The blade stays safely tucked away when not in use. Simply release the safety lock and squeeze the lever to use. With quick release blade change and storage for spares in the body, blade changes are fast and tool-free.



FEATURES

- This utility knife is supplied with trapezoidal blade (S01R).
- It also works with hook blades (SH01R).
- Easy to use safety lock and lever allows the blade to be exposed instantly.
- Thumb wheel accurately adjusts cutting depth.
- Fast, tool-free blade changes.

Cat. No.	Blade Type	Description
S011	Standard Trapezoidal	Hidden Edge Utility Knife







ALUMINIUM DIE-CAST BODY FOLDING KNIFE

A die-cast folding knife using trapezoidal or hook blade.



Cat. No.	Blade Type	Description
KUXP010-N	Standard Trapezoidal	Aluminium Die-Cast Body Folding

FEATURES

- This utility knife works with trapezoidal (S01R) or hook blades (SH01R).
- Supplied with 1 blade and a dispenser with 3 spare trapezoidal blades.

968 HOLSTER FOR S011

Safely and conveniently houses the S011 Hidden Edge Utility Knife.



Cat. No.	Description
968	Hidden Edge Leather Belt Holster

UTILITY KNIVES

ALUMINIUM BODY AUTOMATIC LOCKING

NEW!

Small extruded aluminium utility knife with automatic locking features break-away blades.

FEATURES

- This utility knife works with 9mm (3/8") blade (S05R).
- Aluminium body overmoulded with rubber.
- Internal dispenser with 4 blades.
- Automatic locking blade.



Cat. No.	Blade Width	Description
KUXP020-N	3/8" (9mm)	Small Extruded Aluminium Automatic Locking

REPLACEMENT BLADES

Safe and easy handling dispenser with blades.



S01R

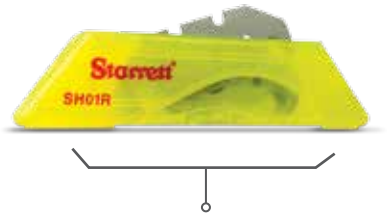

SH01R



S05R



S06R

	Cat. No.	Blade Type	Dispenser Description	Fits
	S01R	Standard Trapezoidal	10 high carbon steel trapezoidal blades	S011 KUXP010-N
	SH01R	Hook	10 high carbon steel hook blades	
	S05R	Break-away 3/8" (9mm)	10 high carbon steel break-away blades.	KUS055-N KUX035-N KUX040-N KUXP020-N
	S06R	Break-away .710" (18mm)	10 high carbon steel break-away blades.	KUS045-N KUX025-N



LEVELS



TORPEDO LEVELS

NEW!

STARRETT TORPEDO

Manufactured with 225mm (9") extruded aluminium frames with high visibility yellow and red ABS plastic construction for impact resistance.



FEATURES

- Vertical, horizontal, and 45° vials.
- V-grooved top surface and magnetic bottom surface.

Cat. No.	Length	Magnetic Model
KLTS9-N	225mm / 9"	X

STARRETT EXACT TORPEDO

Manufactured with 240mm (9.1/2") extruded aluminium frames and finished with red high visibility powder coat paint, including impact resistant ABS grey plastic end caps.



FEATURES

- Vertical, horizontal, and 45° vials.
- Milled top surface finished with a V-groove and a magnetic bottom surface.
- Includes impact resistant ABS plastic end caps.

Cat. No.	Length	Magnetic Model
KLTX95-N	240mm (9-1/2")	X

STARRETT EXACT PLUS TORPEDO

Starrett Exact Plus torpedo levels are manufactured with a 250mm (10") sturdy die cast enclosed aluminium frame and finished with durable powder coat paint.



- Vertical, horizontal, and 45° vials.
- Includes a milled top surface finished with a V-groove and a magnetic bottom surface.

Cat. No.	Length	Magnetic Model
KLTXP10-N	250mm (10")	X

ALUMINIUM LEVELS

STARRETT
BOX BEAM

NEW!

Produced with aluminium special box shape cross section frame for improved strength and rigidity.



FEATURES

- Two vertical vials and one horizontal vial with ABS plastic vial holders.
- Shock-absorbing end caps to protect working edges and preserve accuracy.

Cat. No.	Length
KLBS24-N	600mm (24”)
KLBS48-N	1200mm (48”)
KLBS72-N	1800mm (72”)

STARRETT EXACT
BOX BEAM

Manufactured of heavy duty aluminium with special box shape cross section frame for improved strength. The levels are designed with comfortable hand grips with soft touch.



FEATURES

- Two vertical vials and one horizontal vial with ABS plastic vial holders accurate to 0.001mm / 25mm (0.00005” / inch).
- Shock-absorbing end caps to protect working edges and preserve accuracy.
- Available with milled only or milled and magnetic bottom surface.

Cat. No.	Length	Magnetic
KLBX24-N	600mm (24”)	
KLBX48-N	1200mm (48”)	
KLBX78-N	1950mm (78”)	
KLBX16-1-N	400mm (16”)	X
KLBX24-1-N	600mm (24”)	X
KLBX48-1-N	1200mm (48”)	X
KLBX78-1-N	1950mm (78”)	X



ALUMINIUM LEVELS

STARRETT EXACT PLUS
BOX BEAM

Manufactured from professional quality aluminium with special box shape cross section frame for improved strength. This level includes two milled surfaces, one of which is magnetic.



FEATURES

- Vertical and horizontal vials.
- Vial holders accurate to 0.001mm / 25mm (0.00005" / inch).
- Rubber plastic shock-absorbing end caps to protect working edges and preserve accuracy.
- Comfortable soft touch hand grips.

Cat. No.	Length	Magnetic
KLBXP24-1-N	600mm (24")	X
KLBXP48-1-N	1200mm (48")	X
KLBXP78-1-N	1950mm (78")	X

STARRETT EXACT SERIES
I-BEAM

This level is produced with a heavy duty aluminium I-Beam cross section frame. The unique design includes impact resistant end caps and comfortable soft touch hand grips.



FEATURES

- Large 360° anti-shock vial sites allow maximum visibility and accuracy of 0.03mm per 25mm (0.001" / inch).
- Available with milled bottom surface.

Cat. No.	Length
KLIX24-N	600mm (24")
KLIX48-N	1200mm (48")
KLIX72-N	1800mm (72")

ALUMINIUM LEVELS

STARRETT EXACT PLUS
I-BEAM

Professional duty aluminium I-Beam cross section frame. Unique design includes special rubberized plastic impact resistant end caps.



FEATURES

- Large 360° anti-shock vial sites allow maximum visibility and accuracy of 0.02mm per 25mm (0.00075" / inch).
- Comfortable soft touch hand grips.
- Milled top surface and magnetic bottom surface.

Cat. No.	Length	Magnetic Model
KLIXP24-1-N	600mm (24")	X
KLIXP48-1-N	1200mm (48")	X
KLIXP72-1-N	1800mm (72")	X

POCKET LEVELS

135 SERIES
SATIN NICKEL-PLATED FINISH

	Size		
Cat. No.	Inch	Millimetre	Description
135A	2-1/2"	63mm	With Main Vial
135B	3-1/2"	88mm	

135A

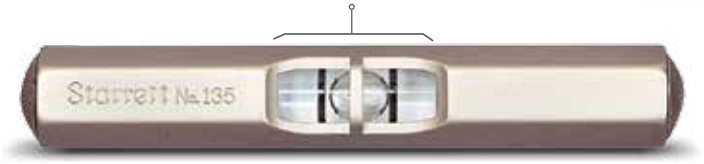

135B







SPECIALITY

ANGLE METRE
MAGNETIC ANGLE METER, 0 TO 90°

Large readable scale for accurate readings from 0 to 90° in any quadrant. Integral magnetic base frees hands when used on ferrous surfaces.



FEATURES

- Measures any angle for pitch or slope.
- Handy rise, run, angle and pitch information on back of the tool.

Cat. No.	Description
AM-2	Magnetic Angle Metre, 0 to 90°

BE-1 BULL'S-EYE
CIRCULAR LEVEL

Circular bull's-eye level has full 360° large sight for easy viewing. Each level features sturdy plastic construction and is ideal for home, workshop and industry use.



Cat. No.	Description
BE-1	44mm / 1-3/4" Circular Level

CROSS TEST LEVELS

134

FEATURES

- Cast iron with a satin nickel finish, all working surfaces are flat and true.
- Level has two vials at right angles for cross test levelling without moving the tool, and a plumb level at the top for checking squareness.
- Accurate, well-made and reliable tool.
- Very light and compact and can be easily carried in the pocket.



	Size		
Cat. No.	Inch	mm	Description
134	2" x 3"	50 x 75mm	With Cross Test Vials and Plumb Vial

136

FEATURES

- Cast iron with a satin nickel finish, all working surfaces are flat and true.
- Level has two vials at right angles for cross test levelling without moving the tool, and a plumb level at the top for checking squareness.
- Level is light and compact, with an attractive black wrinkle finish and a ground reference surface.

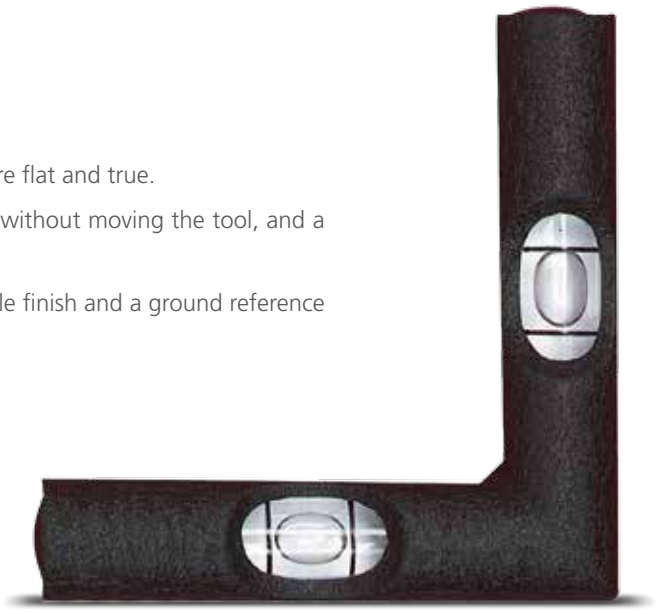

	Size		
Cat. No.	Inch	mm	Description
136	2-3/4" x 2-3/4"	70 x 70mm	With Cross Test Vials



PRECISION MAKES THE DIFFERENCE

GOES THE DISTANCE.

Three major product lines to meet our customer's needs with performance and quality.



Starrett®

00 44 (0)1835 863501 • www.**starrett**.co.uk



CHALK

CHALK LINES

STARRETT

NEW!

High impact-resistant ABS plastic cases that hold 120g (4 oz) of chalk. Each chalk box line includes 30m (100') of line with a press-to-release feature and is manufactured with 3.5X faster line rewind. The chalk line is secured with a stainless steel hook.



FEATURES

- High impact resistant ABS plastic case.
- Holds 120g (4 oz) of chalk.
- 30m (100') press to release line.
- 3.5X faster line rewind.
- Stainless steel hook.

Cat. No.	Size	Feet	Metres
KCS001-N	120g (4 oz)	100'	30m

STARRETT EXACT

High impact-resistant ABS plastic cases with soft touch overmoulding that hold 120g (4 oz) of chalk. Each chalk line includes 30m (100') of line with a press-to-release feature and 6X faster line rewind.



FEATURES

- High impact-resistant case.
- Rubber plastic soft touch overmoulding.
- Holds 120g (4 oz) of chalk.
- 30m (100') press to release line and includes 50% stronger line than standard chalk lines.
- 6X faster line rewind.
- Stainless steel hook.
- Easy feed window.

Cat. No.	Size	Feet	Metres
KCX001-N	120g (4 oz)	100'	30m

CHALK LINES

STARRETT EXACT PLUS SERIES

Available in 120g (4 oz) and 400g (14 oz) sizes. The 4 oz line is manufactured with a heavy duty die-cast aluminium with rubber plastic overmoulding. Available as chalk line only or as a combo pack including a 120g (4 oz) bottle of chalk.

FEATURES

- Heavy-duty die-cast aluminium case.
- Rubber plastic overmoulding.
- Holds 120g (4 oz) of chalk.
- 30m (100') press-to-release line and includes 50% stronger line.
- 6X faster line rewind.
- Easy feed window.

Cat. No.	Size	Feet	Metres	Chalk
KCXP005-N	120g (4 oz)	100'	30m	-
KCXP005B-N				Blue
KCXP005R-N				Red



NEW!

CHALK BOXES

The 400g (14 oz) box is manufactured with a heavy ABS impact resistant plastic case, with rubber plastic overmoulding.

FEATURES

- 45m (150') line.
- Oversized steel ring.
- 6X faster line rewind.



Cat. No.	Size	Feet	Metres
KCXP001-N	400g (14 oz)	150'	45m



REFILLS

NEW!

CHALK

Formulated and coloured to mark distinctively and lay down hard clean lines. New bottle design provides easier handling and a no-spill cap.



FEATURES

- Easy to see colours.

Cat. No.	Size	Color
SC4BLU	1800g (4 lb)	Blue
SC4ORG		Orange
SC4RED		Red
SC4WHT		White
SC8B	230g (8 oz)	Blue
SC8O		Orange
SC8R		Red
SC8W		White

SUC ULTRA CHALK

Formulated to provide a semi-permanent mark that will be visible over an extended time period. The new plastic bottle design incorporates an easy-to-carry handle and includes a foldable, no-spill and no-lose cap.



Cat. No.	Size	Color
SUC4BLU	1800g (4lb)	Permanent Blue
SUC4BLK		Permanent Black
SUC4RED		Permanent Red
SUC8B	230g (8oz)	Permanent Blue
SUC8BLK		Permanent Black
SUC8R		Permanent Red



RULES AND SQUARES



RULES

STRAIGHT EDGE ALUMINIUM RULE

AMSE SERIES

Straight edge aluminium rules are parallel, made of anodized aluminium with smooth, square and straight edges. Centimetre and millimetre graduation readings on either edge.

FEATURES

- Ideal for schools and shops, wood-workers, tinsmiths, metal workers, and bench applications.
- They lie flat, resist bending and feature large, easy to read graduations and numbers that are heavier than conventional machine graduated scales.
- Rules are 50mm (2") wide with centimetre and millimetre graduations reading on either edge.
- Accurate and flexible.

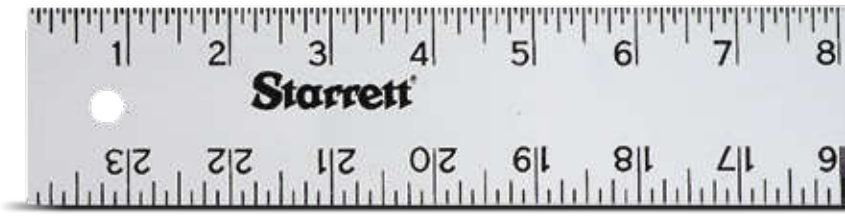

Cat. No.	Length	Thickness
AMSE-500	500mm	2mm
AMSE-1000	1000mm	
AMSE-1500	1500mm	3mm
AMSE-2000	2000mm	

ALUMINIUM METRESTICK

MS-2

Aluminium Metrestick is parallel, accurate and flexible.

FEATURES

- This rule lies flat and features large, easy to read numbers.
- Anodized aluminium.



Cat. No.	Length	Thickness	Description	Graduation
MS-2	1m (39.37")	1.9mm (.075")	Ruled 2 Sides	Metric and Imperial



SQUARES

NEW!

53
CARPENTER'S TRY SQUARE



Cat. No.	Dimension
K53M-200-N	200mm (8″)
K53M-250-N	250mm (10″)
K53M-300-N	300mm (12″)
K53M-350-N	350mm (14″)

FEATURES

- Stainless steel blade.
- Graduations etched on both sides of the blade.
- 50mm (2″) cast aluminium handle.

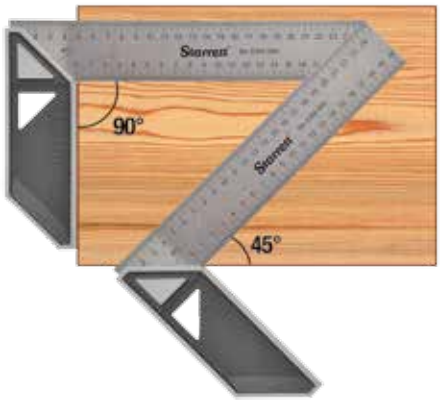

15
UNIVERSAL BEVEL

200mm (8″) stainless steel blade and plastic handle with one spirit level vial.



FEATURES

- Blade lock for transferring angles.
- Handle is ABS plastic for a comfortable grip.

Cat. No.	Dimension
K15-N	200mm (8″)



CALIPERS, DIVIDERS AND TRAMMELS

92
CARPENTERS' DIVIDERS

These dividers combine rigidity, light weight and easy handling. The legs are forged steel, well-shaped, properly tempered and highly polished. The adjustable point may be quickly removed and a pencil inserted in its place.

FEATURES

- Sturdy construction of the joint eliminates side deflection of the legs.
- Quadrant adjusting nut allows fine-adjustments for close measurements.
- Check nut located between the legs locks the legs in place.



	Size*	
Cat. No.	Inch	mm
92-6	6"	150mm
92-9	9"	225mm

* Actual capacity is one-third greater than the listed size.

85
EXTENSION DIVIDERS WITH CALIPER LEGS

Exceptionally rigid although light in weight and easy to handle. The head is made of forged steel.

FEATURES

- The hardened points are bent slightly so they can be rotated and brought closer together if desired.
- Sturdy construction of the joint eliminates side deflection of the legs.
- Quadrant adjusting nut allows fine-adjustments for close measurements.



With Divider Legs Only	Complete with Divider Legs, Inside and Outside Legs	Size*	
Cat. No.	Cat. No.	Inch	mm
85A	85C	7"	175mm
85B	85D	9"	225mm
85E	85F	12"	300mm

* Actual capacity is one-third greater than the listed size.

CALIPERS, DIVIDERS AND TRAMMELS

50
IMPROVED TRAMMEL HEADS

These tools are used to measure the distance between points that are too great to be reached with dividers. The heads are die cast with black wrinkle finish and have hardened, forged steel divider points. The points screw into the heads, and the pencil socket accompanying each set of trammel heads can be used in place of either point.

FEATURES

- The points screw into the heads.
- The heads are die cast with black wrinkle finish and have hardened, forged steel divider points.
- Has an adjustable point.

	Point Size		
Cat. No.	Inch	mm	Description
50A	3" 2-1/2"	75mm 63mm	(Adjustable) Includes 2 Heads, 2 Points, Pencil Socket
50B	3"	75mm	Includes 2 Heads, 2 Points, Pencil Socket



PRECISION STRAIGHT EDGES

380
STEEL STRAIGHT EDGES, NOT BEVELED, NOT GRADUATED

Steel straight edge is precision ground and finished to rigid Starrett standards. It is unexcelled for drawing or scribing straight lines and checking surfaces. 900mm (36") and longer are marked with arrows at two suspension points. If the straight edges are used on edge, they should be suspended at these two points to minimize deflection. Most jobs involve the use of straight edges.

FEATURES

- Precision ground and nicely finished to rigid Starrett standards.
- Unexcelled for drawing or scribing straight lines and checking surface for straightness.
- Not bevelled or graduated.
- Thickness and design permit shape retention and accuracy while portable and easy-to-handle.

Cat. No.	Length	Width x Thickness
380-24	600mm - 24"	36 x 4.4mm - 1-13/32" x 11/64"
380-36	900mm - 36"	60 x 5.5mm - 2-13/32" x 7/32"





SQUARES

13
DOUBLE SQUARES WITH HARDENED BLADES

Popular with machinists, toolmakers, and patternmakers. The sliding blade is adjustable, making it practical for a wide variety of uses. The faces of the head are ground square.

FEATURES

- mm both edges one side, mm and 1/2mm reverse side.

Cat. No.	Size
13MA	100mm





STAIR GAUGES

111 LONG STAIR ATTACHMENTS

Attachments clamp to a framing or rafter square. Forms a handy gauge for laying out stair stringers, hip, valley and many other unusual cuts.

FEATURES

- Furnished in left and right pairs.
- Nickel plated cast iron.
- Ends are machined square for true work contact.
- Brass clamp screw to prevent marring the blade.

Cat. No.	Length	Slot Width
111	48mm (1-7/8")	5mm (3/16")





470 SHORT STAIR ATTACHMENTS

Attachments clamp to a framing or rafter square. Forms a handy gauge for laying out stair stringers, hip, valley, and many other unusual cuts. Fixtures have a smaller area that contacts the square blade.

FEATURES

- Furnished in left and right pairs.
- Nickel plated hexagonal steel.
- Brass clamp screw to prevent marring the blade.
- Slotted to keep two opposite hexagonal faces at right angles to the edge of the square.

Cat. No.	Length	Slot Width
470	19mm (3/4")	5mm (3/16")







PROTRACTORS



PRO SITE PROTRACTOR

505A-12 AND 505A-7
ALUMINIUM MITRE

The popular ProSite 505 protractor family consists of two 300mm (12") combination protractors, a 300mm (12") mitre protractor and two 175mm (7") mitre protractors. The combination protractors take the guesswork out of these functions: mitre cuts, single cuts, compound mitre cuts, included conversion table, protractor and roof pitches. The mitre protractors are ideal for carpenters, plumbers and all building trades that require the measuring and transferring of angles.

FEATURES

- ProSite protractors take error-prone calculations out of the process of mitre cuts.
- This easy-to-use tool has two laser engraved scales.
- Mitre cut scale transfers readings directly to the mitre saw for mitre joints.
- Single cut scale transfers readings directly to the mitre saw.
- Made from durable 6.5mm (1/4") aluminium with Teflon® "O" ring for smooth and precise operation.
- Protractor saves time and reduces waste.



505A-12



505A-7

Cat. No.	Description
505A-12	300mm (12") Mitre Protractor
505A-7	225mm (9") Mitre Protractor

505P-7
PLASTIC MITRE

Our 225mm (7") hardened plastic mitre protractor offers the same functionality as the 505A-7 protractor.





Cat. No.	Description
505P-7	225mm 9") Plastic Mitre Protractor



COMBINATION PROTRACTOR

CP505A-12
ALUMINIUM COMBINATION

A 300mm (12") aluminium combination protractor, that is part of the popular ProSite 505 protractor family. This protractor is a 5-in-1 functional tool that performs: mitre cut, single cut, compound cut conversion table, protractor, and roof pitches.

FEATURES

- 5-in-1 Protractor performs functions of the other ProSite mitre protractors and more.
- Mitre and single cut readings can be transferred directly to the mitre saw.
- The compound conversion table is specifically for the compound mitre saw and can be used for cutting crown moulding.
- Easily finds roof pitches.



Cat. No.	Description
CP505A-12	300mm (12") Combination Protractor

CP505E-12
ALUMINIUM ELECTRONIC COMBINATION

FEATURES

- Provides direct readings for setting a saw for mitre and straight cuts.
- Full protractor function.
- Choice of output and a full 360° swing, horizontal and vertical levels and a step by step guide including all calculations for crown moulding work.
- Has a knob to lock in measurements.



Cat. No.	Description
CP505E-12	300mm (12") Electronic Combination Protractor

970
PROTRACTOR HOLSTER

Cat. No.	Description
970	Leather Holster for CP505A-12 & 505A-12



APPENDIX ONE

HOLE SAW CUTTING SPEED RECOMMENDATIONS

Fast Cut and Deep Cut Bi Metal Hole Saws						
Saw Diameter		Mild Steel	Stainless & Tool Steel	Cast Iron	Brass, Aluminium & copper	Wood and plastic
mm	inch					
14 - 25	9/16 - 1	580 - 350	300 - 175	400 - 235	790 - 470	800 - 500
27 - 51	1.1/16- 2	325 - 170	160 - 85	215 - 115	435 - 230	500 - 200
52 - 76	2.1/16 - 3	165 - 115	80 - 55	110 - 75	220 - 150	200 - 150
79 - 102	3.1/8 - 4	110 - 85	55 - 40	70 - 55	140 - 110	150 - 100
105 - 127	4.1/8 - 5	80 - 65	40 - 30	55 - 25	110 - 85	100 - 85
133 - 152	5.1/4 - 6	55	25	55 - 25	75	75
160 - 210	4.1/8 - 8.9/32	40	20	55 - 25	60	60

Bi Metal Cordless Smooth Cutting Hole Saws				
Saw Diameter				
mm	inch	Mild Steel	Stainless & Tool Steel	Wood Plastic and Aluminium
16 - 20	5/8 - 25/32	500	230	700
22 - 29	7/8 - 1.1/8	400	185	550
30 - 38	1.3/16 - 1.1/2	330	150	450

TCT Fast Cut Multi Purpose Hole Saws		
Saw Diameter		
mm	Inch	All Materials
19 - 27	3/4 - 11/16	1700 - 1300
29 - 51	1.1/8 - 2	1100 - 650
54 - 76	2.1/8 - 3	600 - 425
79-102	3.1/8 - 4	400 - 325
111 - 159	4.3/8 - 6.1/4	300 - 210

TCT Stainless Steel Hole Saws			
Saw Diameter			
mm	inch	Mild Steel	Stainless & Steel
15 - 25	19/32 - 1	800 - 640	460 - 370
26 - 39	1.1/32 - 1.17/32	590 - 460	320 - 270
40 - 55	1.9/16 - 2.5/32	400 - 320	220 - 170
60 - 85	2.3/8 - 3.23/64	265 - 200	140 - 105
90 - 100	3.9/16 - 4.23/32	175 - 130	90 - 65

Diamond Ceramic and Abrasive Material Hole Saws			
Saw Diameter			
mm	Inch	Minimum Speed	Maximum Speed
14 - 25	9/16 - 1	500	1000
27 - 51	1.1/16 - 2	250	500
52 - 83	2.1/16 - 3.1/4	150	300
86 - 152	3.3/8 - 6	100	200

Diamond Brick and Masonry Dri Core Drills			
Saw Diameter			
mm	Inch	Minimum Speed	Maximum Speed
22 - 52	9/16 - 1	250	500
65 - 78	2.9/16 - 3.1/16	150	300
102 - 152	4 - 6	100	200



PRECISION MAKES THE DIFFERENCE

EXCEED YOUR CAPABILITIES.

The Starrett FMS Series incorporates new performance-based capabilities and user-friendly features to help you perform critical force tests with greater accuracy and efficiency.
It can perform all of your basic force measurement tests, as well as more complex multi-stage tests to international standards.



Model FMS5000

Starrett®

00 44 (0)1835 863501 • www.**starrett**.co.uk

STARRETT PRODUCT LINES...

POWER TOOL ACCESSORIES & HAND TOOLS

JOBSITE & WORKSHOP TOOLS

BAND SAW BLADES & MACHINES

PRECISION MEASURING TOOLS

WEBBER GAUGE BLOCKS

METROLOGY EQUIPMENT

LASER MEASUREMENT

PRECISION GRANITE

PRECISION GROUND SOLUTIONS

ROUNDNESS MEASUREMENT

FORCE MEASUREMENT

SERVICE & TECHNICAL SUPPORT

PTA AND HAND TOOLS

www.starrett.co.uk

Starrett®

Phone: 00 44 (0)1835 863501 | Fax: 00 44 (0) 1835 863018
sales@starrett.co.uk
Jedburgh, Scotland, TD8 6LR

Catalogue 71E PTA and Hand Tools The L.S. Starrett Company 2015© Specifications subject to change